IF6124

Inductive sensor with IO-Link

IFK3007-FRKG/IO/US-104

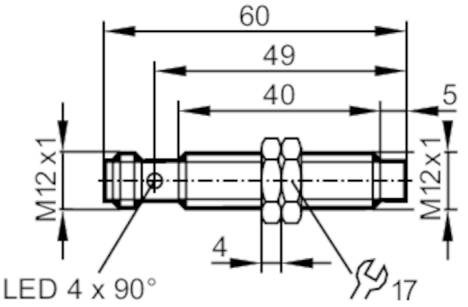

Product characteristics		
Electrical design		PNP/NPN; (parameterisable)
Output function		normally open / normally closed; (selectable)
Communication interface		IO-Link
Housing		threaded type
Dimensions	[mm]	M12 x 1 / L = 60
Electrical data		
Operating voltage	[V]	10...30 DC
Current consumption	[mA]	10
Protection class		III
Reverse polarity protection		yes
Outputs		
Electrical design		PNP/NPN; (parameterisable)
Output function		normally open / normally closed; (selectable)
Max. voltage drop switching output DC	[V]	2.5
Permanent current rating of switching output DC	[mA]	100
Switching frequency DC	[Hz]	600
Short-circuit protection		yes
Overload protection		yes
Detection zone		
Switch point IO-Link	[mm]	1.3...6.5; (parameterisable)
Measuring range IO-Link	[mm]	0.7...7
Accuracy / deviations		
Correction factor		steel: 1 / stainless steel: 0.7 / brass: 0.5 / aluminium: 0.5 / copper: 0.4
Hysteresis	[% of Sr]	3...15
Linearity error of analogue output	[%]	± 2 %; (of the final value of the measuring range)
Repeatability analogue output	[%]	± 1 %; (of the final value of the measuring range)
Temperature coefficient		± 0,3 %/K; (of the final value of the measuring range)

IF6124

Inductive sensor with IO-Link

IFK3007-FRKG/IO/US-104

Interfaces			
Communication interface		IO-Link	
Transmission type		COM2 (38,4 kBaud)	
IO-Link revision		1.1	
SDCI standard		IEC 61131-9 CDV	
Profiles		Smart Sensor: Device Identification; Device Diagnosis; Device Teach Channel; Binary Data Channel; Process Data Variable	
SIO mode		yes	
Required master port type		A	
Min. process cycle time	[ms]	3	
Supported DeviceIDs		Type of operation	DeviceID
		Default	791
Operating conditions			
Ambient temperature	[°C]	-40...85	
Protection		IP 65; IP 66; IP 67; IP 68; IP 69K	
Tests / approvals			
EMC		EN 61000-4-2 ESD	4 kV CD / 8 kV AD
		EN 61000-4-3 HF radiated	10 V/m
		EN 61000-4-4 Burst	2 kV
		EN 61000-4-6 HF conducted	10 V
		EN 55011	class B
Vibration resistance		EN 60068-2-6 Fc	20 g (10...3000 Hz) / 50 sweep cycles, 1 octave per minute, in 3 axes
Shock resistance		EN 60068-2-27 Ea	100 g 11 ms half-sine; 3 shocks each in every direction of the 3 coordinate axes
Continuous shock resistance		EN 60068-2-29 Eb	40 g 6 ms; 4000 shocks each in every direction of the 3 coordinate axes
Fast temperature change		EN 60068-2-14 Na	TA = -40 °C; TB = 85 °C; t1 = 30 min; t2 = < 10 s; 50 cycles
MTTF	[years]	672	
UL approval		Ta	-25...70 °C
		Enclosure type	Type 1
		voltage supply	Limited Voltage/Current
		UL Approval no.	A008
		File number UL	E174191
Mechanical data			
Weight	[g]	27.1	
Housing		threaded type	
Mounting		non-flush mountable	
Dimensions	[mm]	M12 x 1 / L = 60	
Thread designation		M12 x 1	
Materials		brass white bronze coated; sensing face: PBT orange; LED window: PEI; lock nuts: brass white bronze coated	

IF6124

Inductive sensor with IO-Link

IFK3007-FRKG/IO/US-104

Displays / operating elements		
Display	switching status	4 x LED, yellow
	SIO mode	
	output stage supplied with current	LED, yellow lights
	IO-Link mode	
	target in measuring range	LED, yellow lights

Accessories	
Items supplied	lock nuts: 2

Remarks	
Pack quantity	1 pcs.

Electrical connection - plug

Connector: 1 x M12; coding: A

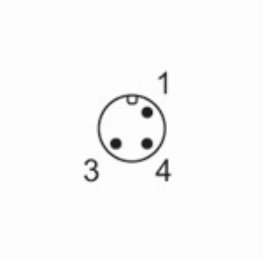

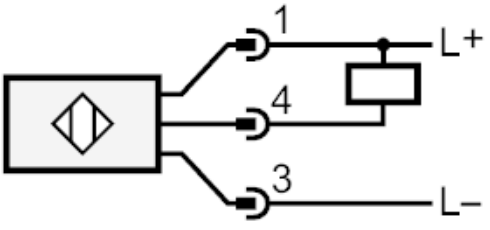

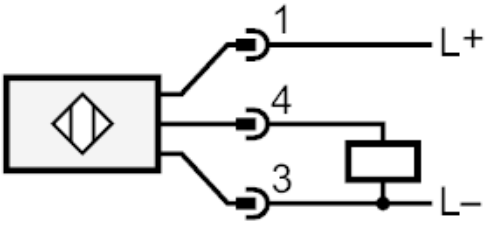

4:	OUT / IO-Link