KF5001

Capacitive sensor

KFA3040BBPKG/NI/US

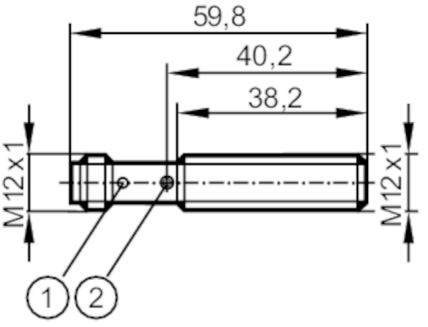

1 LED 4 x 90°
2 potentiometer

Product characteristics		
Electrical design		PNP
Output function		normally open
Sensing range	[mm]	1...6
Housing		threaded type
Dimensions	[mm]	M12 x 1 / L = 60
Application		
Media		dry bulk material; liquids
Electrical data		
Operating voltage	[V]	10...36 DC; ("supply class 2" to cULus)
Current consumption	[mA]	< 12
Protection class		III
Reverse polarity protection		yes
Outputs		
Electrical design		PNP
Output function		normally open
Max. voltage drop switching output DC	[V]	2.5
Permanent current rating of switching output DC	[mA]	100
Switching frequency DC	[Hz]	50
Short-circuit proof		yes
Overload protection		yes
Detection zone		
Sensing range	[mm]	1...6
Sensing range adjustable		yes
Factory setting sensing range	[mm]	4
Real sensing range Sr	[mm]	4 ± 10 %

KF5001

Capacitive sensor

KFA3040BBPKG/NI/US

Accuracy / deviations			
Correction factor		glass: 0.6 / water: 1 / ceramics: 0.5 / PVC: 0.4	
Hysteresis	[% of Sr]	1...15	
Switch point drift	[% of Sr]	-20...20	
Operating conditions			
Ambient temperature	[°C]	-25...70	
Protection		IP 65	
Increased immunity		yes	
Tests / approvals			
EMC		EN 60947-5-2	
MTTF	[years]	636	
Mechanical data			
Weight	[g]	39.3	
Housing		threaded type	
Mounting		flush mountable	
Dimensions	[mm]	M12 x 1 / L = 60	
Thread designation		M12 x 1	
Materials		stainless steel (1.4404 / 316L); PEEK	
Displays / operating elements			
Display		switching status	1 x LED, yellow
Accessories			
Items supplied		lock nuts: 2	
Remarks			
Pack quantity		1 pcs.	
Electrical connection - plug			

Connector: 1 x M12; coding: A



KF5001

Capacitive sensor

KFA3040BBPKG/NI/US

Connection

