L0402C5N6SRMQT

Obsolete

KEMET, L-RMQ, RF, 0.0056 uH, +/-0.3 nH

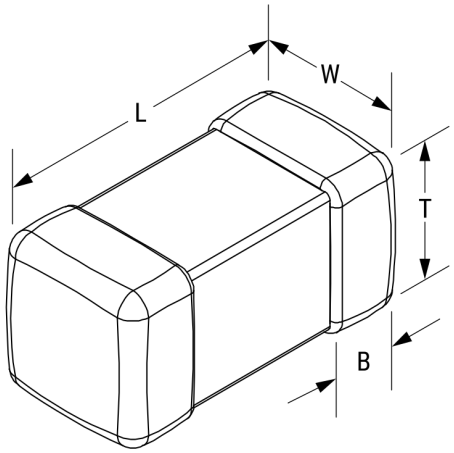

General Information	
Series	L-RMQ
Style	SMD Chip
RoHS	Yes

Specifications	
Inductance	0.0056 uH
Inductance Tolerance	+/-0.3 nH
Current	420 mAmps (MAX), 550 mAmps (Self Heating)
DC Resistance	0.2 Ohms
Quality Factor	48 at 800 MHz, 65 at 1500 MHz
Self-Resonant Frequency	4000 MHz MIN

Dimensions	
Chip Size	0402
L	1mm +/-0.05mm
W	0.5mm +/-0.05mm
T	0.5mm +/-0.05mm
LL	0.25mm +/-0.1mm
B	0.25mm +/-0.1mm

Packaging Specifications	
Packaging	T&R
Packaging Quantity	10000

Statements of suitability for certain applications are based on our knowledge of typical operating conditions for such applications, but are not intended to constitute - and we specifically disclaim - any warranty concerning suitability for a specific customer application or use. This Information is intended for use only by customers who have the requisite experience and capability to determine the correct products for their application. Any technical advice inferred from this Information or otherwise provided by us with reference to the use of our products is given gratis, and we assume no obligation or liability for the advice given or results obtained.

© 2006 - 2023 KEMET