# L0402C7N5JRMQT

Obsolete

KEMET, L-RMQ, RF, 0.0075 uH, 5%

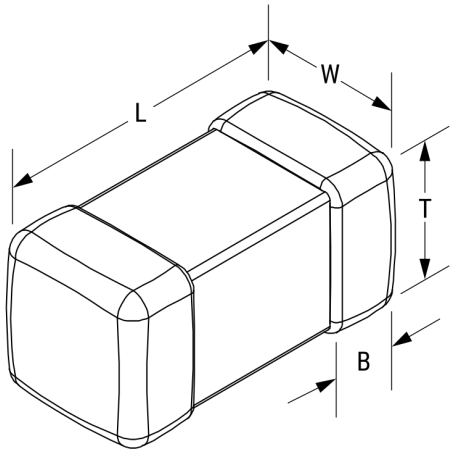


| General Information | |
|---|---|
| Series | L-RMQ |
| Style | SMD Chip |
| RoHS | Yes |

| Specifications | |
|---|---|
| Inductance | 0.0075 uH |
| Inductance Tolerance | 5% |
| Current | 370 mAmps (MAX), 490 mAmps (Self Heating) |
| DC Resistance | 0.25 Ohms |
| Quality Factor | 45 at 800 MHz, 60 at 1500 MHz |
| Self-Resonant Frequency | 3700 MHz MIN |

| Dimensions | |
|---|---|
| Chip Size | 0402 |
| L | 1mm +/-0.05mm |
| W | 0.5mm +/-0.05mm |
| T | 0.5mm +/-0.05mm |
| LL | 0.25mm +/-0.1mm |
| B | 0.25mm +/-0.1mm |

| Packaging Specifications | |
|---|---|
| Packaging | T&R |
| Packaging Quantity | 10000 |

Statements of suitability for certain applications are based on our knowledge of typical operating conditions for such applications, but are not intended to constitute - and we specifically disclaim - any warranty concerning suitability for a specific customer application or use. This Information is intended for use only by customers who have the requisite experience and capability to determine the correct products for their application. Any technical advice inferred from this Information or otherwise provided by us with reference to the use of our products is given gratis, and we assume no obligation or liability for the advice given or results obtained.



© 2006 - 2023 KEMET