MP156

Small, Energy-Efficient, Off-line Regulator 30mW No-Load Power Consumption

The Future of Analog IC Technology

DESCRIPTION

MP156 is a primary-side regulator that provides accurate constant voltage (CV) regulation without opto-coupler, support Buck, Buck-Boost, Boost and Flyback topologies. It has an integrated 500V MOSFET to simplify the structure and reduce costs. These features make it a competitive candidate for off-line low power applications, such as home appliances and standby power.

MP156 is a green-mode-operation regulator. Both its the peak current and the switching frequency decrease as the load decreases to provide excellent efficiency at light load, thus improving the overall average efficiency.

MP156 features various protections, including thermal shutdown (TSD), VCC under-voltage lockout (UVLO), overload protection (OLP), short-circuit protection (SCP), and open loop protection.

MP156 is available in the TSOT23-5 and SOIC8 packages.

FEATURES

- Primary-side constant voltage (CV) control, supporting Buck, Buck-Boost, Boost and Flyback topologies
- Integrated 500V/20Ω MOSFET
- <30mW no-load power consumption
- Up to 4W output power
- Maximum DCM output current less than 130mA
- Maximum CCM output current less than 220mA
- Low VCC Operating Current
- Frequency foldback
- Limited maximum frequency
- Peak-current compression
- Internal high-voltage current source
- Internal 350ns leading-edge blanking
- Thermal shutdown (auto restart)
- VCC under voltage lockout with hysteresis
- Timer based over-load protection.
- Short-circuit protection
- Open-loop protection

APPLICATIONS

- Home appliances, white goods and consumer electronics
- Industrial controls
- Standby power

All MPS parts are lead-free and adhere to the RoHS directive. For MPS green status, please visit MPS website under Quality Assurance. “MPS” and “The Future of Analog IC Technology” are Registered Trademarks of Monolithic Power Systems, Inc.

TYPICAL APPLICATION

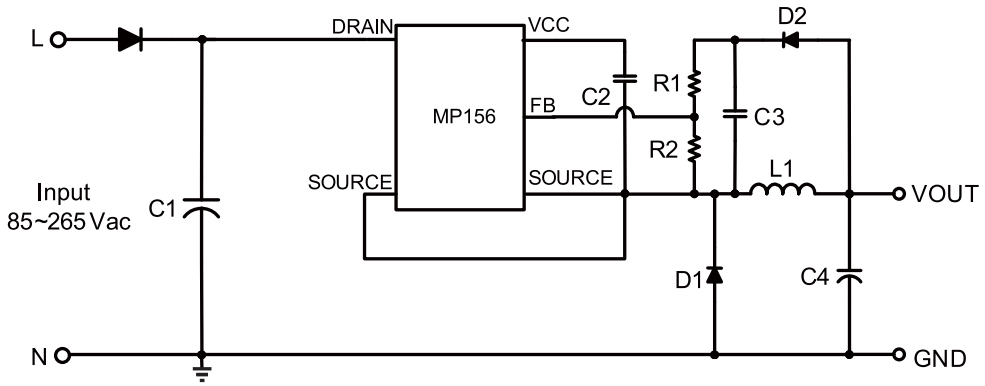

MPS Proprietary Information. Patent Protected. Unauthorized Photocopy and Duplication Prohibited.
© 2018 MPS. All Rights Reserved.

ORDERING INFORMATION

Part Number*	Package	Top Marking
MP156GJ	TSOT23-5	AFA
MP156GS	SOIC8	MP156

* For Tape & Reel, add suffix –Z (e.g. MP156GJ–Z);
* For Tape & Reel, add suffix –Z (e.g. MP156GS–Z);

PACKAGE REFERENCE

TOP VIEW	TOP VIEW
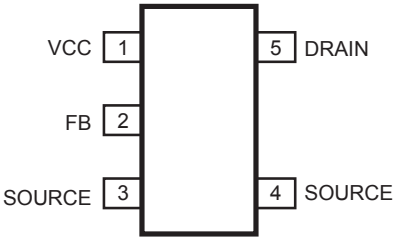	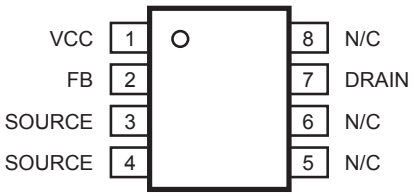
TSOT23-5	SOIC8

ABSOLUTE MAXIMUM RATINGS (1)

Drain to source..... -0.7V to 500V
All other pins ..... -0.7V to 6.5V
Continuous Power Dissipation.... (T_A = +25°C)(2)
TSOT23-5 ..... 1W
SOIC8..... 1W
Junction Temperature..... 150°C
Lead Temperature ..... 260°C
Storage Temperature.....-60°C to +150°C
ESD Capability Human Body Mode 4.0kV
ESD Capability Machine Mode..... 200V

Recommended Operating Conditions (3)

Operating Junction Temp. (T_J). -40°C to +125°C
Operating VCC range ..... 5.3V to 5.6V

Thermal Resistance (4)

	θ_{JA}	θ_{JC}	
TSOT23-5	100	55	°C/W
SOIC8	96	45	°C/W

Notes:

1) Exceeding these ratings may damage the device.
2) The maximum allowable power dissipation is a function of the maximum junction temperature T_J(MAX), the junction-to-ambient thermal resistance θ_{JA}, and the ambient temperature TA. The maximum allowance continuous power dissipation at any ambient temperature is calculated by PD(MAX)=(TJ(MAX)-TA)/θ_{JA}. Exceeding the maximum allowance power dissipation will cause excessive die temperature, and the regulator will go into thermal shutdown. Internal thermal shutdown circuit protects the device from permanent damage.
3) The device is not guaranteed to function outside of its operating conditions.
4) Measured on JESD51-7, 4-layer PCB.

MPS Proprietary Information. Patent Protected. Unauthorized Photocopy and Duplication Prohibited.
© 2018 MPS. All Rights Reserved.

ELECTRICAL CHARACTERISTICS

V_{CC} = 5.8V, T_A = 25°C, unless otherwise noted.

Parameter	Symbol	Condition	Min	Typ	Max	Units
Start-up Current Source (Drain Pin)						
Internal regulator supply current	$I_{regulator}$	VCC=4V;V_{Drain}=100V	2.5	3.5	4.5	mA
Drain pin leakage current	I_{Leak}	VCC=5.8V;V_{Drain}=400V		10	12	μA
Breakdown Voltage	$V_{(BR)DSS}$		500			V
Supply Voltage Management (VCC Pin)						
VCC level (increasing) where the internal regulator stops	VCC_{OFF}		5.4	5.6	5.8	V
VCC level (decreasing) where the internal regulator turns on	VCC_{ON}		5.1	5.3	5.6	V
VCC regulator on and off hysteresis				250		mV
VCC level (decreasing) where the IC stops	VCC_{stop}			3.4		V
VCC level (decreasing) where the protection phase ends	VCC_{pro}			2.4		V
Internal IC consumption	I_{CC}	VCC=5.8V, f_s=37kHz, D=40%			430	μA
Internal IC consumption (No switching)	I_{CC}				165	uA
Internal IC consumption, latch-off phase	$I_{CCLATCH}$	VCC=5.3V		16		μA
Internal MOSFET (Drain Pin)						
Breakdown Voltage	V_{BRDSS}		500			V
ON resistance	R_{on}			20		Ω
Internal Current Sense						
Peak current limit	I_{Limit}		260	290	345	mA
Leading-edge blanking	τ_{LEB1}			350		ns
SCP point	I_{SCP}			450		mA
Leading-edge blanking for SCP	τ_{LEB2}			180		ns
Feedback Input (FB Pin)						
Minimum off time	τ_{minoff}		15	18	21	μs
Primary MOSFET feedback turn-on threshold	V_{FB}		2.45	2.55	2.65	V
OLP feedback trigger threshold OLP	V_{FB_OLP}		1.6	1.7	1.8	V
OLP delay time	τ_{OLP}	f_s=37kHz		170		ms
Open-loop detection	V_{OLD}			60		mV
Thermal Shutdown						
Thermal shutdown threshold				150		°C

MPS Proprietary Information. Patent Protected. Unauthorized Photocopy and Duplication Prohibited.
© 2018 MPS. All Rights Reserved.

TYPICAL CHARACTERISTICS

Breakdown Voltage vs. Junction Temperature

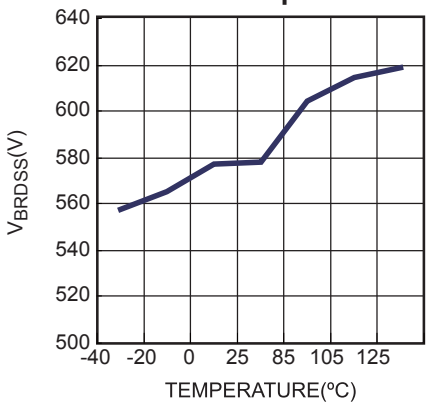

On-State Resistance vs. Junction Temperature

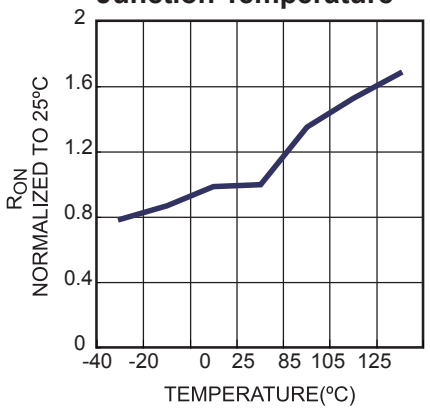

Feedback Voltage vs. Junction Temperature

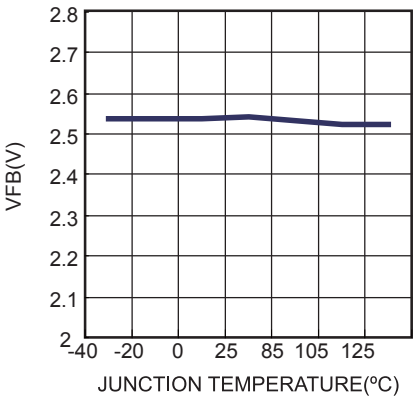

Minimum Off Time vs. Junction Temperature

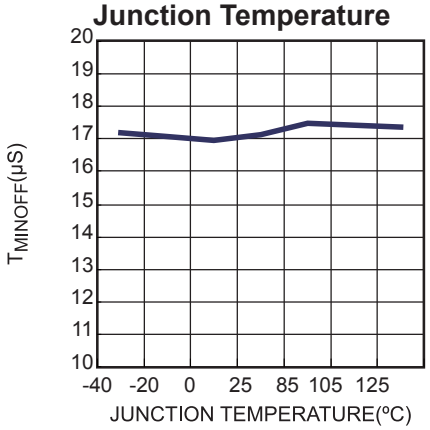

MPS Proprietary Information. Patent Protected. Unauthorized Photocopy and Duplication Prohibited.
© 2018 MPS. All Rights Reserved.

TYPICAL PERFORMANCE CHARACTERISTICS

V_{IN} = 265VAC, V_{OUT} = 12V, I_{OUT} = 150mA, L = 1.8mH, C_{OUT} = 100µF, T_A = +25°C, unless otherwise noted.

Start Up

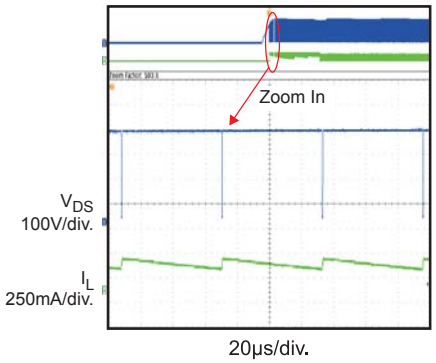

Normal Operation

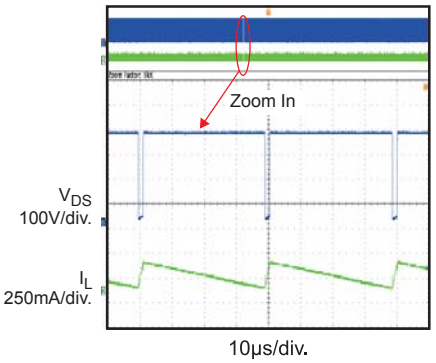

SCP

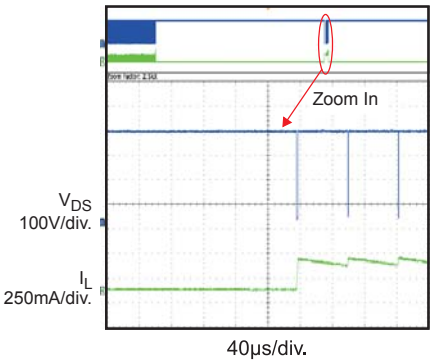

Open Loop Protection

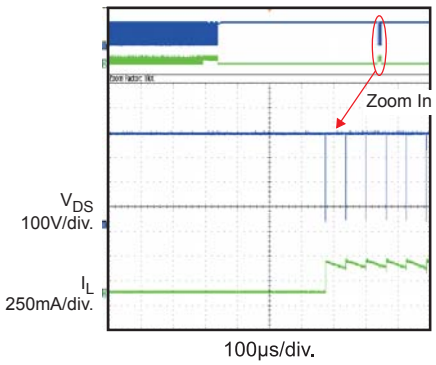

MPS Proprietary Information. Patent Protected. Unauthorized Photocopy and Duplication Prohibited.
© 2018 MPS. All Rights Reserved.

TYPICAL PERFORMANCE CHARACTERISTICS *(continued)*

V_{IN} = 230VAC, V_{OUT} = 12V, I_{OUT} = 150mA, L = 1.8mH, C_{OUT} = 100µF, T_A = +25°C, unless otherwise noted.

Input Power Start Up

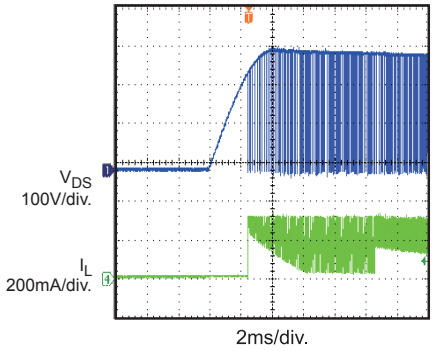

Input Power Shut Down

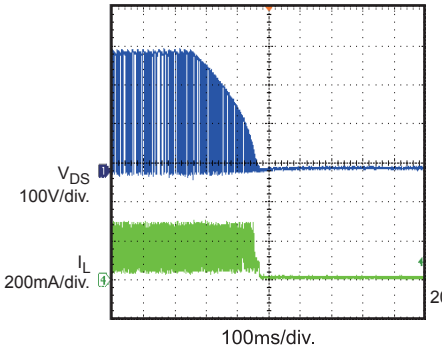

SCP Entry

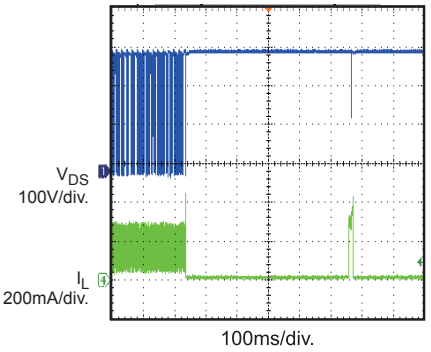

SCP recovery

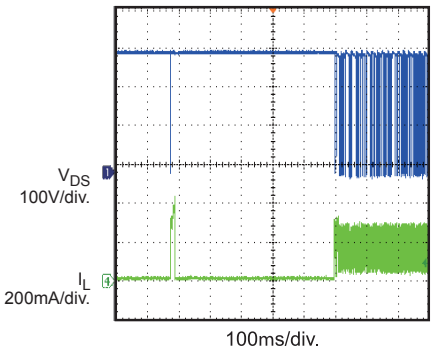

Open Loop Entry

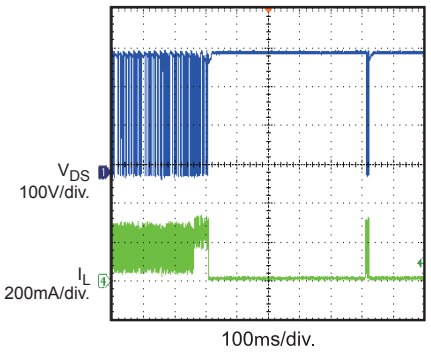

Open Loop Recovery

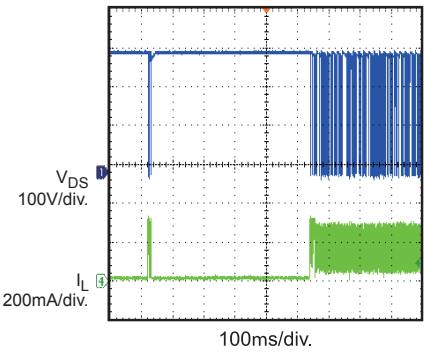

Output Voltage Ripple

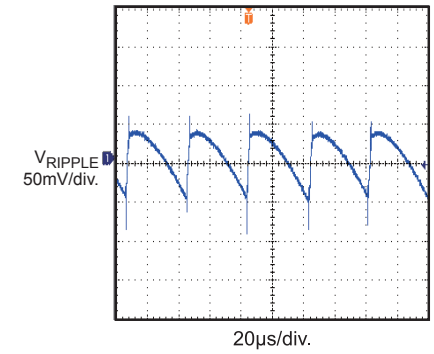

Load Transient

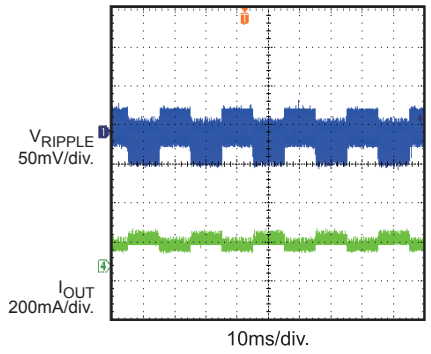

MPS Proprietary Information. Patent Protected. Unauthorized Photocopy and Duplication Prohibited.
© 2018 MPS. All Rights Reserved.

PIN FUNCTIONS

Pin # TSOT23-5	Pin # SOIC8	Name	Description
1	1	VCC	Control circuit power supply.
2	2	FB	Regulator feedback.
3,4	3,4	SOURCE	Internal power MOSFET source. Ground reference for VCC and FB pins.
5	7	DRAIN	Internal power MOSFET drain. High-voltage current source input.
	5,6,8	N/C	Not connected.

MPS Proprietary Information. Patent Protected. Unauthorized Photocopy and Duplication Prohibited.
© 2018 MPS. All Rights Reserved.

FUNCTIONAL BLOCK DIAGRAM

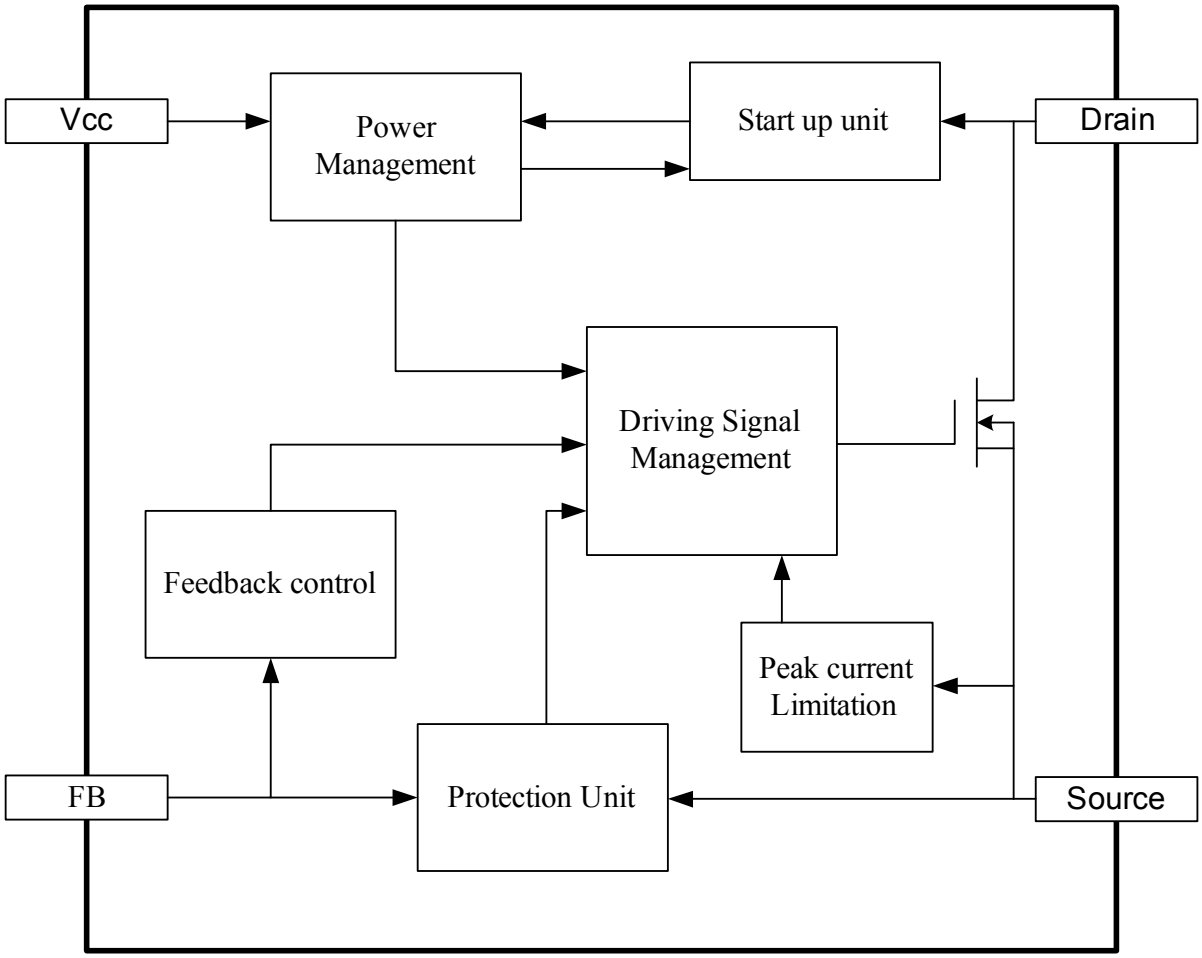

Figure 1: Functional Block Diagram

MPS Proprietary Information. Patent Protected. Unauthorized Photocopy and Duplication Prohibited.
© 2018 MPS. All Rights Reserved.

OPERATION

MP156 is a green-mode-operation regulator: the peak current and the switching frequency both decrease with a decreasing load. As a result, it still offers excellent light-load efficiency, thus improved average efficiency. The typical application diagram shows the regulator operating with a minimum number of external components. It incorporates multiple features as described in the following sections.

Start-Up and Under-Voltage Lockout

The internal high-voltage regulator self-supplies the IC from the Drain pin. The IC starts switching and the internal high voltage regulator turns off when the voltage on VCC reaches 5.6V. The internal high-voltage regulator turns on to charge the external VCC capacitor when the VCC voltage falls below 5.3V. A small capacitor (in the low μF range) can maintain the VCC voltage and thus lower the capacitor cost.

When the VCC voltage drops blow 3.4V, the IC stops switching, then the internal high-voltage regulator charges the VCC capacitor.

Under fault conditions—such as OLP, SCP, and OTP—the IC stops switching and an internal current source (~16μA) discharges the VCC capacitor. The internal high-voltage regulator will not charge the VCC capacitor until the VCC voltage drops below 2.4V. Under fault conditions, estimate the restart time using the following equation,

$$\tau_{restart} = C_{VCC} \times \frac{V_{CC} - 2.4V}{16\mu A} + C_{VCC} \times \frac{5.6V - 2.4V}{3.5mA}$$

Figure 2 shows the typical waveform with VCC under-voltage lockout.

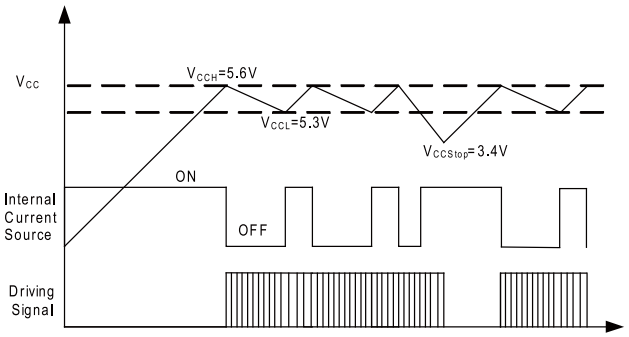

Figure 2: VCC Under-Voltage Lockout

Constant Voltage Operation

MP156 acts as a fully-integrated regulator when used in the Buck topography, as shown in the typical application on page1.

At the beginning of each cycle, the integrated MOSFET turns ON while the feedback voltage remains below the 2.5V reference voltage, which indicates insufficient output voltage. The peak current limitation determines the ON period. After the ON period elapses, the integrated MOSFET turns off. The freewheeling diode (D1) will not turn on until the inductor (L1) charges the sampling capacitor (C3) voltage to equal the output voltage. The sampling capacitor voltage changes with the output voltage, and can sample and hold the output voltage to regulate the output voltage. The sampling capacitor voltage will decrease when the L1 inductor current falls below the output current. When the feedback voltage falls below the 2.5V reference voltage, a new switching cycle begins. Figure 3 shows this operation under CCM in detail.

MPS Proprietary Information. Patent Protected. Unauthorized Photocopy and Duplication Prohibited.
© 2018 MPS. All Rights Reserved.

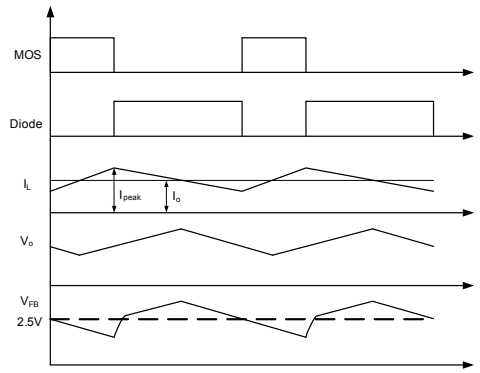

Figure 3: V_{FB} vs. V_O

Thus monitoring the sampling capacitor regulates the output voltage. Use the following equation to determine the output voltage:

$$Vo = 2.5V \times \frac{R1+R2}{R2}$$

Frequency Foldback

Under light-load or no-load conditions, the output drops very slowly, thus increasing the time when the MOSFET turn-on time. The frequency decreases as the load decreases. The MP156 remains highly efficiency under light-load condition by reducing the switching frequency automatically.

Determine the switching frequency as:

$$f_s = \frac{(V_{in}-V_o)}{2L(I_{peak}-I_o)} \cdot \frac{V_o}{V_{in}}, \text{ for CCM}$$

$$f_s = \frac{2(V_{in}-V_O)}{LI^2_{peak}} \cdot \frac{I_o V_o}{V_{in}}, \text{ for DCM}$$

At the same time, the peak current limit decreases from 290mA as the off-time increases. In standby mode, the frequency and the peak current are both minimized, allowing for a smaller dummy load. As a result, peak-current compression helps to reduce no-load consumption. Estimate the peak current limit from the following equation (τ_{off} is the power module's off time):

$$I_{Peak} = 290mA - (1mA/\mu s) \times (\tau_{off} - 18\mu s)$$

Minimum Off-Time Limit

The MP156 implements a minimum off-time limit. During normal operation, the minimum off-time limit is 18μs, and this limit gradually shortens during the start-up period from 72μs, to 36μs, to 18μs (see Figure 4). Each minimum off-time retains 128 switching cycles. This soft-start function provides a safe start-up.

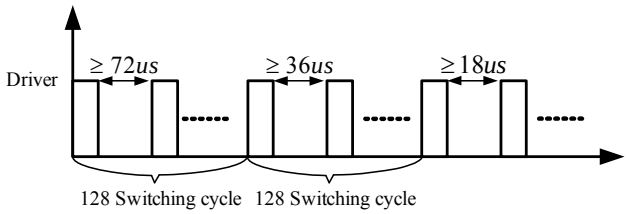

Figure 4: $\tau_{min\,off}$ at Start-Up

EA Compensation

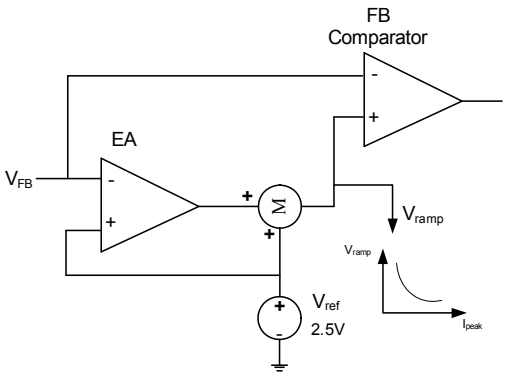

Figure 5: EA and Ramp Compensation

The MP156 features error amplifier (EA) compensation function (Shown in Figure 5) to improve load regulation. 6μs after the MOSFET turns off, the MP156 samples the feedback voltage. Thus EA compensation regulates the 2.5V reference voltage with the load to improve overall power regulation.

Ramp Compensation

An internal ramp compensation circuit precisely maintains the output voltage. Figure 6 shows an exponential voltage sinking source added to pull down the reference voltage of the feedback comparator. The ramp compensation is a function of the load conditions: the compensation is about the 1mV/μs under full-load conditions compensation increases exponentially as the load decreases.

MPS Proprietary Information. Patent Protected. Unauthorized Photocopy and Duplication Prohibited.
© 2018 MPS. All Rights Reserved.

Over-Load Protection (OLP)

The peak current and the switching frequency both increase as the load increases. When the switching frequency and peak current reach their maximums, the output voltage decreases if the load continues to increase so that the FB voltage drops below the OLP point.

The MP156 continuously monitors FB. When the FB voltage drops below 1.7V—which is considered as an error flag—the timer starts. Removing the error flag resets the timer. If the timer reaches 170ms (f_s=37kHz), OLP occurs. This timer duration avoids triggering OLP when the power supply starts up or is in a load transition phase: The power supply should start up in less than 170ms (f_s=37kHz). Changing the switching frequency changes the OLP delay time as per the following equation:

$$\tau_{Delay} \approx 170ms \times \frac{37kHz}{fs}$$

Short-Circuit Protection (SCP)

The MP156 monitors the peak current, and shuts down when the peak current rises above 450mA through short-circuit protection. The power supply resumes operation with the removal of the fault.

Thermal Shutdown (TSD)

To prevent any lethal thermal damage, the MP156 shuts down switching when the inner temperature exceeds 150°C. During the thermal shutdown (TSD), the VCC capacitor discharges to 2.4V, and then the internal high voltage regulator re-charges by.

Open-Loop Detection

If V_{FB} is less than 60mV, the IC will stop switching and a re-start cycle will begin. During start-up, the open loop detection is blanked for 128 switching cycles.

Leading-Edge Blanking

An internal leading-edge blanking (LEB) unit—between the current sense resistor inside the IC and the current comparator input—avoids premature switching pulse termination due to parasitic capacitance,. During the blanking time, the current comparator is disabled and can not turn off the external MOSFET. Figure 6 shows the leading-edge blanking.

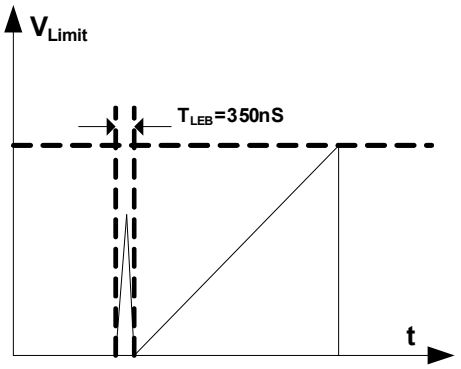

Figure 6: Leading-Edge Blanking

MPS Proprietary Information. Patent Protected. Unauthorized Photocopy and Duplication Prohibited.
© 2018 MPS. All Rights Reserved.

APPLICATION INFORMATION

Table 1. Common Topologies Using MP156

Topology	Circuit Schematic	Features
High-Side Buck	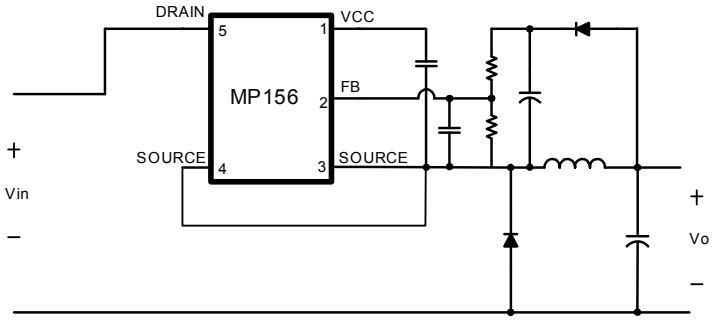	1. No-isolation, 2. Positive output 3. Low cost 4. Direct feedback
High-Side Buck-Boost	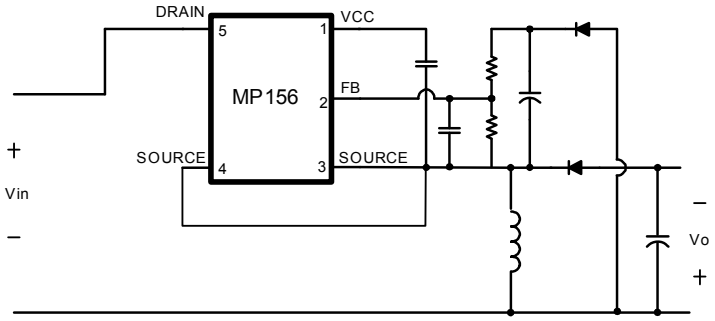	1. No-isolation, 2. Negative output 3. Low cost 4. Direct feedback
Boost	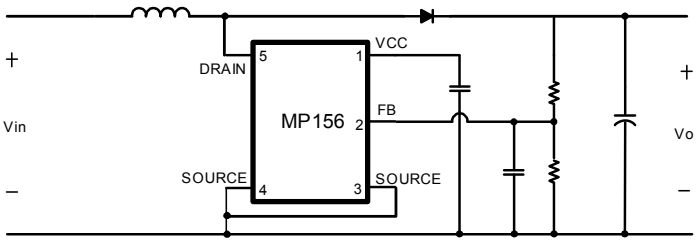	1. No-isolation, 2. Positive output 3. Low cost 4. Direct feedback
Flyback	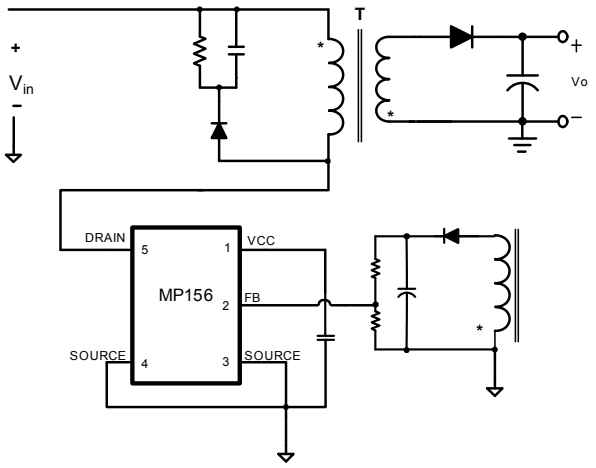	1. Isolation, 2. Positive output 3. Low cost 4. Indirect feedback

MPS Proprietary Information. Patent Protected. Unauthorized Photocopy and Duplication Prohibited.
© 2018 MPS. All Rights Reserved.

Topology Options

MP156 can be used in common topologies, such as Buck, Buck-Boost, Boost and Flyback. Please find the Table.1 for more information.

Component Selection

Input Capacitor

The input capacitor supplies the DC input voltage for the converter. Figure 7 shows the typical DC bus voltage waveform of a half-wave rectifier.

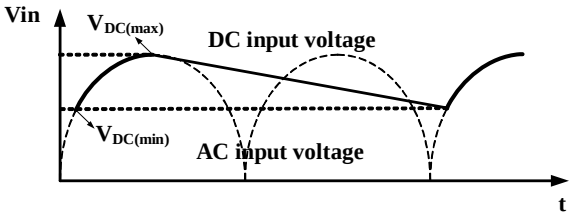

Figure 7: Input Voltage Waveform

Typically, the use of a half-wave rectifier requires an input capacitor rated at 3uF/W for the universal input condition. When using the full-wave rectifier, choose a smaller capacitor. Avoid a minimum DC voltage below 70V; a low DC input voltage can cause thermal shutdown.

Inductor

The MP156 has a minimum off-time limit that determines the maximum power output. The maximum power increases as the inductor increases. Using a smaller inductor may cause failure at full load, but a larger inductor means a higher OLP load. For best results, select an inductor with the minimum value that can supply the rated power. Estimate the maximum power with:

$$P_{omax} = V_o(I_{peak} - \frac{V_o \tau_{minoff}}{2L}), \text{ for CCM}$$

$$P_{omax} = \frac{1}{2} L I_{peak}^2 \cdot \frac{1}{\tau_{minoff}}, \text{ for DCM}$$

To account for different converter tolerances—such as peak current limitation, minimum off time and so on—find the minimum value, P_{min}, of the maximum output power. Choose an inductor with a P_{min} higher than the rated power.

Figure 8 shows a example of a P_{min} curve with a 12V output. (I_{peak}=0.29A, τ_{minoff}=18μs)

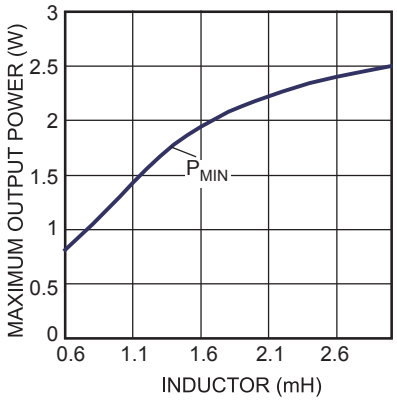

Figure 8: P_{min} vs. L at 12V

For a 1.2W converter (12V, 0.1A), the minimum inductor value is about 0.9mH.

To reduce costs, use a standard off-the-shelf inductor no less than the calculated value.

Freewheeling Diode

Select a diode with a maximum reverse voltage rating greater than the maximum input voltage, and a current rating determined by the output current.

The freewheeling diode's reverse recovery can affect efficiency and circuit operation, so use an ultra fast diode such as the EGC10JH.

Output Capacitor

The output capacitor is required to maintain the DC output voltage. Estimate the output voltage ripple as:

$$V_{CCM_ripple} = \frac{\Delta i}{8 f_s C_o} + \Delta i \cdot R_{ESR}, \text{ for CCM}$$

$$V_{DCM_ripple} = \frac{I_o}{f_s C_o} \cdot \left(\frac{I_{pk} - I_o}{I_{pk}} \right)^2 + I_{pk} \cdot R_{ESR}, \text{ for DCM}$$

MPS Proprietary Information. Patent Protected. Unauthorized Photocopy and Duplication Prohibited.
© 2018 MPS. All Rights Reserved.

For best results, use ceramic, tantalum or low ESR electrolytic capacitors to reduce the output voltage ripple.

Feedback Resistors

The resistor divider determines the output voltage. Choose appropriate values for R1 and R2 to maintain V_{FB} at 2.5V. Avoid large R2 value (typically 5kΩ to 10kΩ).

Feedback Capacitor

The feedback capacitor provides a sample and hold function. Small capacitors result in poor regulation at light loads, and large capacitors affect the circuit operation. Roughly estimate an optimal capacitor value using the following equation:

$$\frac{1}{2}\frac{V_o}{R_1+R_2}\cdot\frac{C_o}{I_o} \le C_{FB} \le \frac{V_o}{R_1+R_2}\cdot\frac{C_o}{I_o}$$

Choose the nearest appropriate value.

Dummy Load

A dummy load is required to maintain the load regulation. This ensures sufficient inductor energy to charge the sample and hold capacitor to detect the output voltage. Normally a 3mA dummy load is needed and can be adjusted to the regulated voltage. Increasing the dummy load reduces the efficiency and no-load consumption. Use a zener diode if no-load regulation is not a concern.

Auxiliary VCC Supply

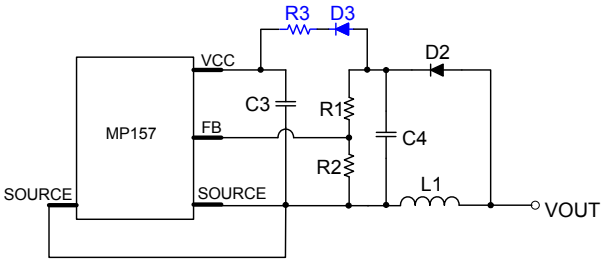

Figure 9: Auxiliary V_{CC} Supply Circuit

The MP156 drops below the 30mW no-load power requirement. This chip requires a diode (D3) to reduce overall power consumption.

In addition, the MP156 requires an external VCC supply. This supply is derived from the resistor connected between C3 and C4. For values above V_O=7V, determine R3 as per the formula below.

$$R \approx \frac{V_o - 5.8V}{180\mu A}$$

Surge Performance

Select an appropriate input capacitor value to obtain a good surge performance. Figure 10 shows the half-wave rectifier. Table 2 shows the capacitance required under normal condition for different surge voltages.

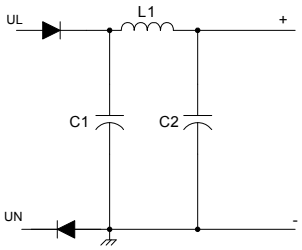

Figure 10: Half-Wave Rectifier

Table 2: Recommended Capacitance

Surge voltage	500V	1000V	2000V
C1	1μF	10μF	22μF
C2	1μF	4.7μF	10μF

Layout Guide

PCB layout is very important for reliable operation, and good EMI and thermal performance. Please follow these guidelines to optimize performance.

1) Minimize the loop area formed by the input capacitor, IC, freewheeling diode, inductor and output capacitor.
2) Place the power inductor far away from the input filter.
3) Place a capacitor valued at several hundred pF between the FB pin and source as close the IC as possible.
4) Connect the exposed pad with the DRAIN pin to a larger copper area to improve thermal performance.

MPS Proprietary Information. Patent Protected. Unauthorized Photocopy and Duplication Prohibited.
© 2018 MPS. All Rights Reserved.

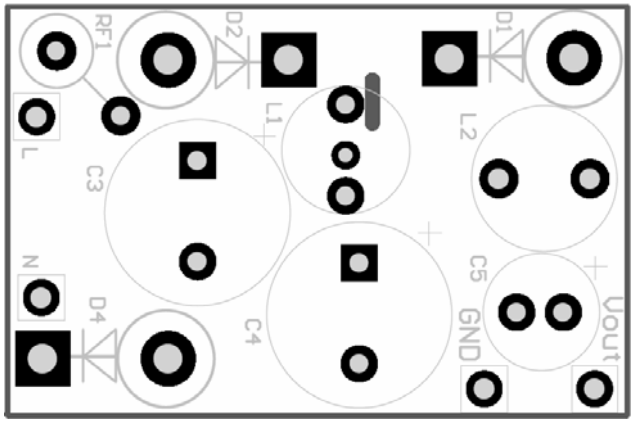

Top

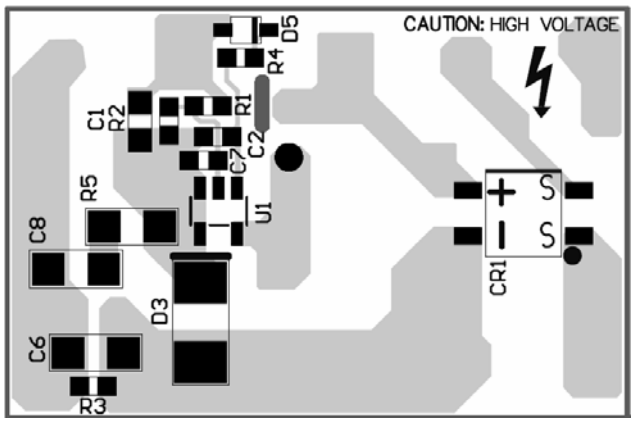

Bottom Layer

Design Example

Below is a design example following the application guidelines for the specifications:

Table 3: Design Example

V_{IN}	85VAC to 265VAC
V_{OUT}	12V
I_{OUT}	150mA

The detailed application schematic is shown in Figure. The typical performance and circuit waveforms have been shown in the Typical Performance Characteristics section. For more device application, please refer to the related Evaluation Board Datasheets.

MPS Proprietary Information. Patent Protected. Unauthorized Photocopy and Duplication Prohibited.
© 2018 MPS. All Rights Reserved.

TYPICAL APPLICATION CIRCUITS

Figure 11 shows a typical application example of a 12V, 150mA non-isolated power supply using MP156.

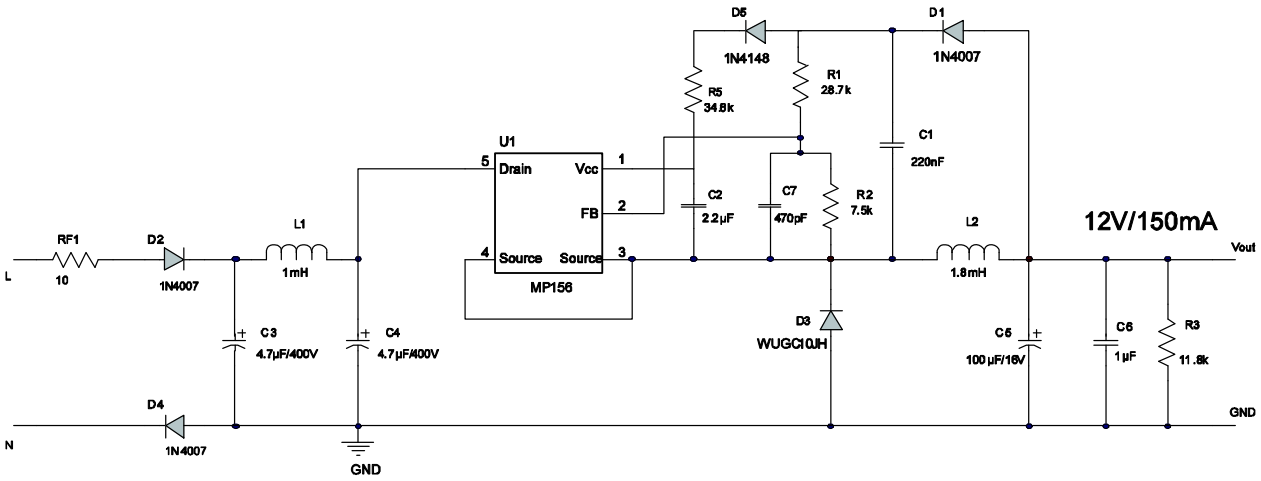

Figure 11: Typical Application at 12V, 150mA

MPS Proprietary Information. Patent Protected. Unauthorized Photocopy and Duplication Prohibited.
© 2018 MPS. All Rights Reserved.

FLOW CHART

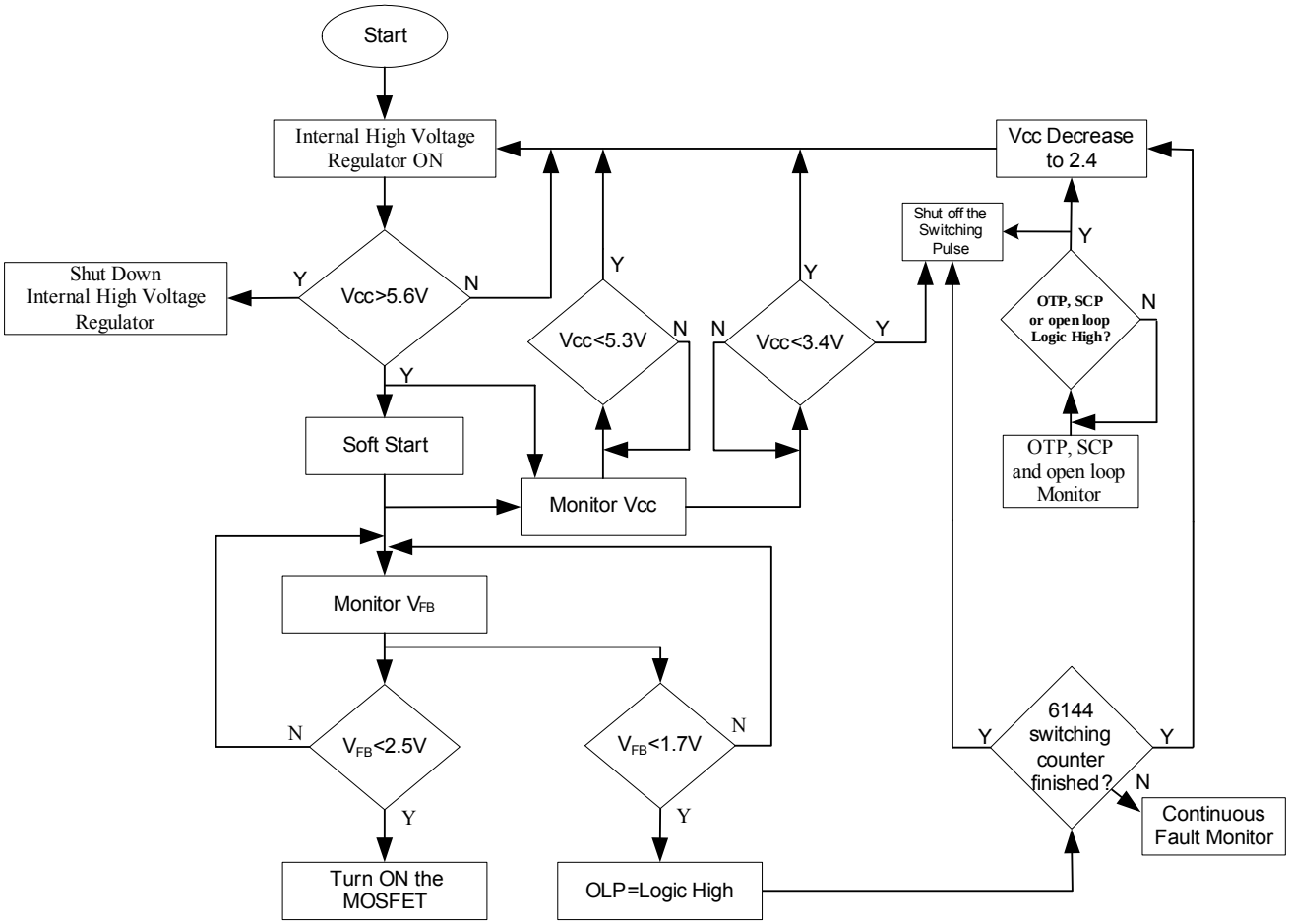

UVLO, OTP, SCP, OLP and Open Loop Protection are auto restar

Figure 12: Control Flow Chart

MPS Proprietary Information. Patent Protected. Unauthorized Photocopy and Duplication Prohibited.
© 2018 MPS. All Rights Reserved.

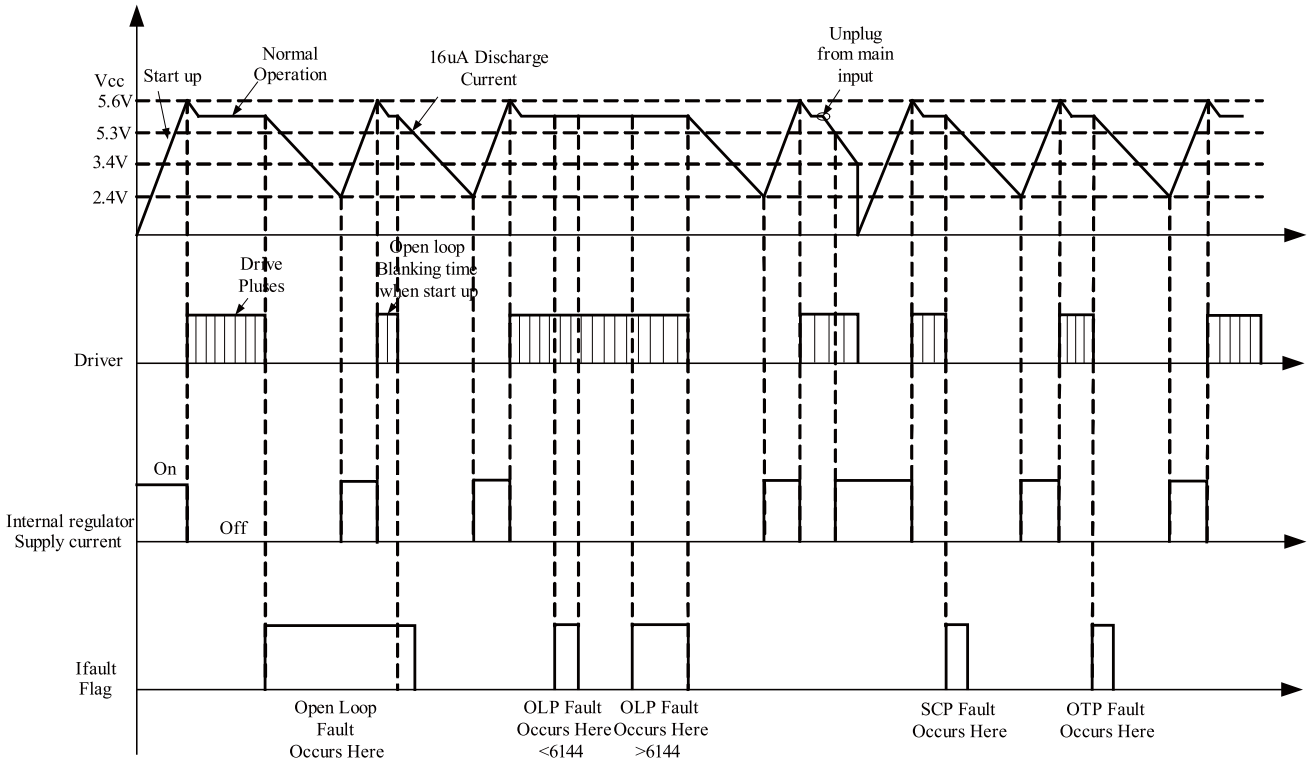

Figure 13: Signal Evolution in the Presence of a Fault

MPS Proprietary Information. Patent Protected. Unauthorized Photocopy and Duplication Prohibited.
© 2018 MPS. All Rights Reserved.

PACKAGE INFORMATION

TSOT23-5

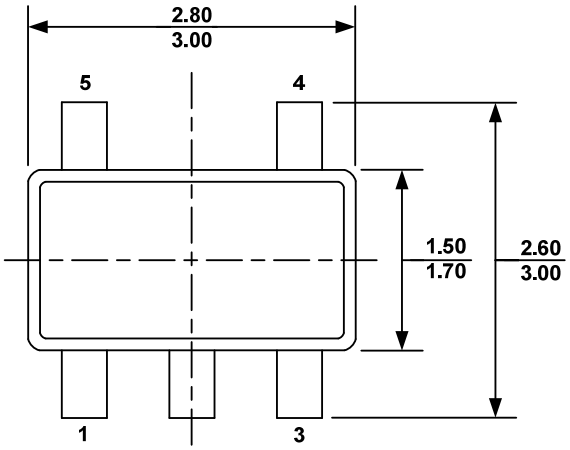

TOP VIEW

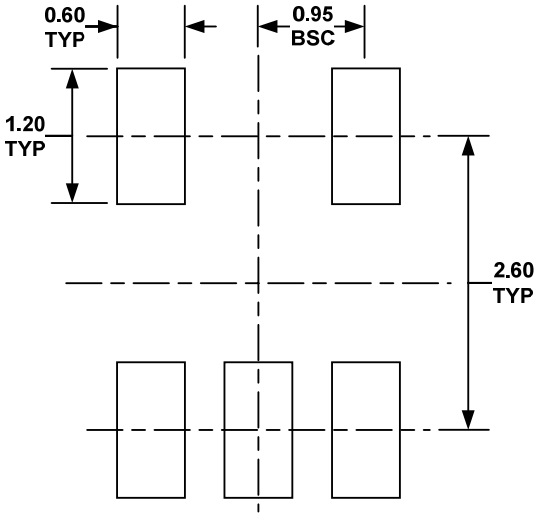

RECOMMENDED LAND PATTERN

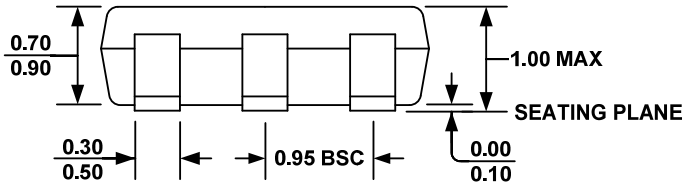

FRONT VIEW

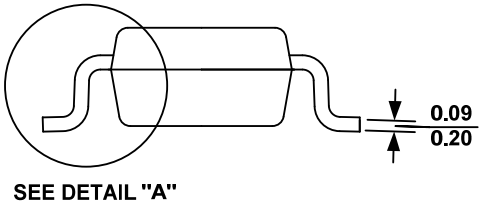

SIDE VIEW

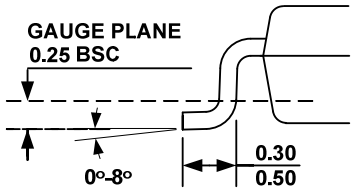

DETAIL "A"

NOTE:

1) ALL DIMENSIONS ARE IN MILLIMETERS.
2) PACKAGE LENGTH DOES NOT INCLUDE MOLD FLASH, PROTRUSION OR GATE BURR.
3) PACKAGE WIDTH DOES NOT INCLUDE INTERLEAD FLASH OR PROTRUSION.
4) LEAD COPLANARITY (BOTTOM OF LEADS AFTER FORMING) SHALL BE 0.10 MILLIMETERS MAX.
5) DRAWING CONFORMS TO JEDEC MO-193, VARIATION AA.
6) DRAWING IS NOT TO SCALE.

MPS Proprietary Information. Patent Protected. Unauthorized Photocopy and Duplication Prohibited.
© 2018 MPS. All Rights Reserved.

PACKAGE INFORMATION

SOIC8

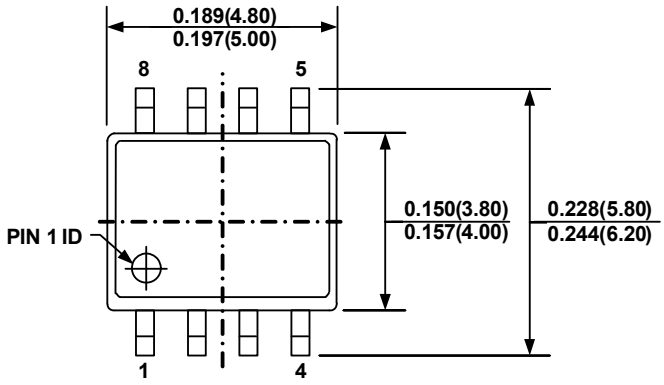

TOP VIEW

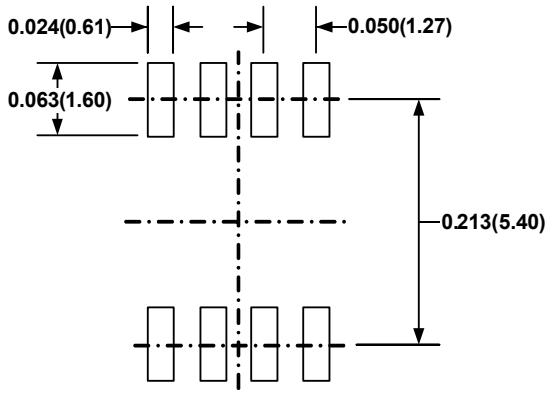

RECOMMENDED LAND PATTERN

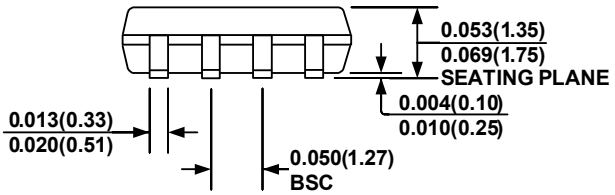

FRONT VIEW

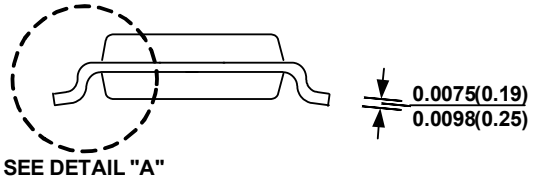

SIDE VIEW

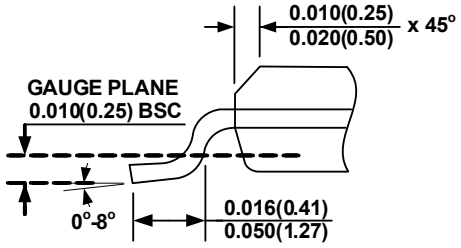

DETAIL "A"

NOTE:

1) CONTROL DIMENSION IS IN INCHES. DIMENSION IN BRACKET IS IN MILLIMETERS.
2) PACKAGE LENGTH DOES NOT INCLUDE MOLD FLASH, PROTRUSIONS OR GATE BURRS.
3) PACKAGE WIDTH DOES NOT INCLUDE INTERLEAD FLASH OR PROTRUSIONS.
4) LEAD COPLANARITY(BOTTOM OF LEADS AFTER FORMING) SHALL BE 0.004" INCHES MAX.
5) DRAWING CONFORMS TO JEDEC MS-012, VARIATION AA.
6) DRAWING IS NOT TO SCALE

NOTICE: The information in this document is subject to change without notice. Please contact MPS for current specifications. Users should warrant and guarantee that third party Intellectual Property rights are not infringed upon when integrating MPS products into any application. MPS will not assume any legal responsibility for any said applications.

MPS Proprietary Information. Patent Protected. Unauthorized Photocopy and Duplication Prohibited.
© 2018 MPS. All Rights Reserved.