National Semiconductor

June 1989

54LS157/DM54LS157/DM74LS157, 54LS158/DM54LS158/DM74LS158 Quad 2-Line to 1-Line Data Selectors/Multiplexers

General Description

These data selectors/multiplexers contain inverters and drivers to supply full on-chip data selection to the four output gates. A separate strobe input is provided. A 4-bit word is selected from one of two sources and is routed to the four outputs. The LS157 presents true data whereas the LS158 presents inverted data to minimize propagation delay time.

Applications

- Expand any data input point
- Multiplex dual data buses
- Generate four functions of two variables (one variable is common)
- Source programmable counters

Features

- Buffered inputs and outputs
- Typical Propagation Time
  LS157 9 ns
  LS158 7 ns
- Typical Power Dissipation
  LS157 49 mW
  LS158 24 mW
- Alternate Military/Aerospace device (54LS157, 54LS158) is available. Contact a National Semiconductor Sales Office/Distributor for specifications.

Connection Diagrams

Dual-In-Line Package

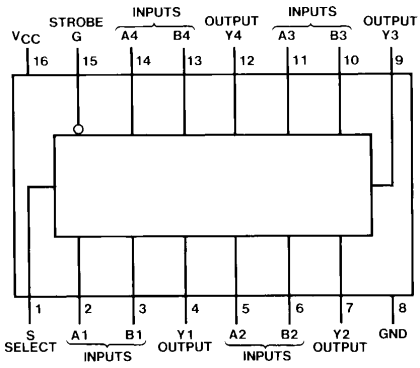

TL/F/6396–1

Order Number 54LS157DMQB, 54LS157FMQB, 54LS157LMQB, DM54LS157J, DM54LS157W, DM74LS157M or DM74LS157N
See NS Package Number E20A, J16A, M16A, N16E or W16A

Dual-In-Line Package

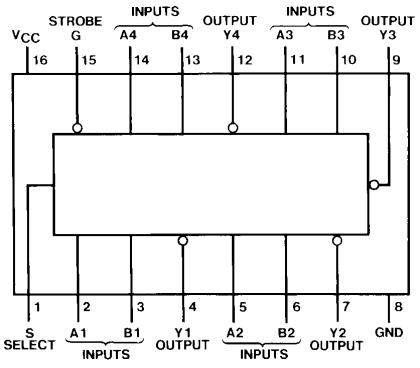

TL/F/6396–2

Order Number 54LS158DMQB, 54LS158FMQB, 54LS158LMQB, DM54LS158J, DM54LS158W, DM74LS158M or DM74LS158N
See NS Package Number E20A, J16A, M16A, N16E or W16A

Function Table

Inputs				Output Y	
Strobe	Select	A	B	LS157	LS158
H	X	X	X	L	H
L	L	L	X	L	H
L	L	H	X	H	L
L	H	X	L	L	H
L	H	X	H	H	L

H = High Level, L = Low Level, X = Don't Care

©1995 National Semiconductor Corporation TL/F/6396

RRD-B30M105/Printed in U. S. A.

54LS157/DM54LS157/DM74LS157, 54LS158/DM54LS158/DM74LS158
Quad 2-Line to 1-Line Data Selectors/Multiplexers

Absolute Maximum Ratings (Note)

If Military/Aerospace specified devices are required, please contact the National Semiconductor Sales Office/Distributors for availability and specifications.

Supply Voltage	7V
Input Voltage	7V
Operating Free Air Temperature Range	
DM54LS and 54LS	−55°C to +125°C
DM74LS	0°C to +70°C
Storage Temperature Range	−65°C to +150°C

Note: *The "Absolute Maximum Ratings" are those values beyond which the safety of the device cannot be guaranteed. The device should not be operated at these limits. The parametric values defined in the "Electrical Characteristics" table are not guaranteed at the absolute maximum ratings. The "Recommended Operating Conditions" table will define the conditions for actual device operation.*

Recommended Operating Conditions

Symbol	Parameter	DM54LS157			DM74LS157			Units
		Min	Nom	Max	Min	Nom	Max	
V_{CC}	Supply Voltage	4.5	5	5.5	4.75	5	5.25	V
V_{IH}	High Level Input Voltage	2			2			V
V_{IL}	Low Level Input Voltage			0.7			0.8	V
I_{OH}	High Level Output Current			−0.4			−0.4	mA
I_{OL}	Low Level Output Current			4			8	mA
T_A	Free Air Operating Temperature	−55		125	0		70	°C

'LS157 Electrical Characteristics

over recommended operating free air temperature range (unless otherwise noted)

Symbol	Parameter	Conditions		Min	Typ (Note 1)	Max	Units
V_I	Input Clamp Voltage	V_{CC} = Min, I_I = −18 mA				−1.5	V
V_{OH}	High Level Output Voltage	V_{CC} = Min, I_{OH} = Max, V_{IL} = Max, V_{IH} = Min	DM54	2.5	3.4		V
			DM74	2.7	3.4		
V_{OL}	Low Level Output Voltage	V_{CC} = Min, I_{OL} = Max, V_{IL} = Max, V_{IH} = Min	DM54		0.25	0.4	V
			DM74		0.35	0.5	
		I_{OL} = 4 mA, V_{CC} = Min	DM74		0.25	0.4	
I_I	Input Current @ Max Input Voltage	V_{CC} = Max, V_I = 7V	S or G			0.2	mA
			A or B			0.1	
I_{IH}	High Level Input Current	V_{CC} = Max, V_I = 2.7V	S or G			40	μA
			A or B			20	
I_{IL}	Low Level Input Current	V_{CC} = Max, V_I = 0.4V	S or G			−0.8	mA
			A or B			−0.4	
I_{OS}	Short Circuit Output Current	V_{CC} = Max (Note 2)	DM54	−20		−100	mA
			DM74	−20		−100	
I_{CC}	Supply Current	V_{CC} = Max (Note 3)			9.7	16	mA

Note 1: All typicals are at V_{CC} = 5V, T_A = 25°C.

Note 2: Not more than one output should be shorted at a time, and the duration should not exceed one second.

Note 3: I_{CC} is measured with 4.5V applied to all inputs and all outputs open.

'LS157 Switching Characteristics

at V_{CC} = 5V and T_A = 25°C (See Section 1 for Test Waveforms and Output Load)

Symbol	Parameter	From (Input) To (Output)	R_L = 2 kΩ				Units
			C_L = 15 pF		C_L = 50 pF		
			Min	Max	Min	Max	
t_{PLH}	Propagation Delay Time Low to High Level Output	Data to Y		14		18	ns
t_{PHL}	Propagation Delay Time High to Low Level Output	Data to Y		14		23	ns
t_{PLH}	Propagation Delay Time Low to High Level Output	Strobe to Y		20		24	ns
t_{PHL}	Propagation Delay Time High to Low Level Output	Strobe to Y		21		30	ns
t_{PLH}	Propagation Delay Time Low to High Level Output	Select to Y		23		28	ns
t_{PHL}	Propagation Delay Time High to Low Level Output	Select to Y		27		32	ns

Recommended Operating Conditions

Symbol	Parameter	DM54LS158			DM74LS158			Units
		Min	Nom	Max	Min	Nom	Max	
V_{CC}	Supply Voltage	4.5	5	5.5	4.75	5	5.25	V
V_{IH}	High Level Input Voltage	2			2			V
V_{IL}	Low Level Input Voltage			0.7			0.8	V
I_{OH}	High Level Output Current			−0.4			−0.4	mA
I_{OL}	Low Level Output Current			4			8	mA
T_A	Free Air Operating Temperature	−55		125	0		70	°C

'LS158 Electrical Characteristics

over recommended operating free air temperature range (unless otherwise noted)

Symbol	Parameter	Conditions		Min	Typ (Note 1)	Max	Units
V_I	Input Clamp Voltage	V_{CC} = Min, I_I = −18 mA				−1.5	V
V_{OH}	High Level Output Voltage	V_{CC} = Min, I_{OH} = Max, V_{IL} = Max, V_{IH} = Min	DM54	2.5	3.4		V
			DM74	2.7	3.4		
V_{OL}	Low Level Output Voltage	V_{CC} = Min, I_{OL} = Max, V_{IL} = Max, V_{IH} = Min	DM54		0.25	0.4	V
			DM74		0.35	0.5	
		I_{OL} = 4 mA, V_{CC} = Min	DM74		0.25	0.4	
I_I	Input Current @ Max Input Voltage	V_{CC} = Max, V_I = 7V	S or G			0.2	mA
			A or B			0.1	
I_{IH}	High Level Input Current	V_{CC} = Max, V_I = 2.7V	S or G			40	μA
			A or B			20	
I_{IL}	Low Level Input Current	V_{CC} = Max, V_I = 0.4V	S or G			−0.8	mA
			A or B			−0.4	
I_{OS}	Short Circuit Output Current	V_{CC} = Max (Note 2)	DM54	−20		−100	mA
			DM74	−20		−100	
I_{CC}	Supply Current	V_{CC} = Max (Note 3)			4.8	8	mA

Note 1: All typicals are at V_{CC} = 5V, T_A = 25°C.

Note 2: Not more than one output should be shorted at a time, and the duration should not exceed one second.

Note 3: I_{CC} is measured with 4.5V applied to all inputs and all outputs open.

’LS158 Switching Characteristics

at V_{CC} = 5V and T_A = 25°C (See Section 1 for Test Waveforms and Output Load)

Symbol	Parameter	From (Input) To (Output)	R_L = 2 kΩ				Units
			C_L = 15 pF		C_L = 50 pF		
			Min	Max	Min	Max	
t_{PLH}	Propagation Delay Time Low to High Level Output	Data to Y		12		18	ns
t_{PHL}	Propagation Delay Time High to Low Level Output	Data to Y		12		21	ns
t_{PLH}	Propagation Delay Time Low to High Level Output	Strobe to Y		17		23	ns
t_{PHL}	Propagation Delay Time High to Low Level Output	Strobe to Y		18		28	ns
t_{PLH}	Propagation Delay Time Low to High Level Output	Select to Y		20		24	ns
t_{PHL}	Propagation Delay Time High to Low Level Output	Select to Y		24		36	ns

Logic Diagrams

LS157

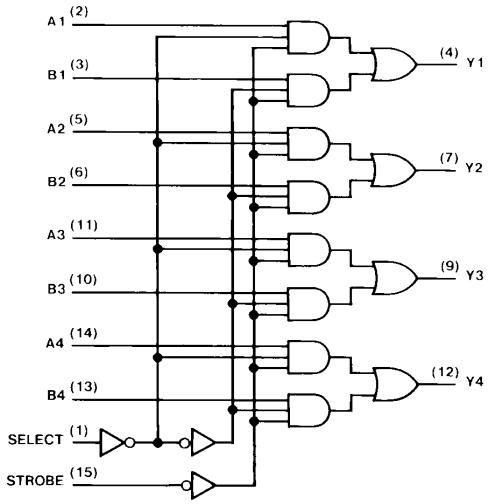

TL/F/6396–3

LS158

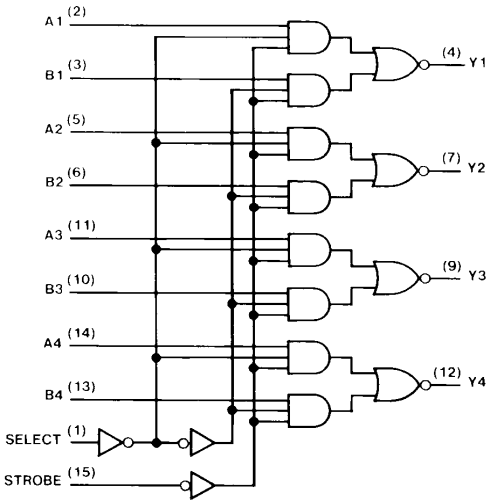

TL/F/6396–4

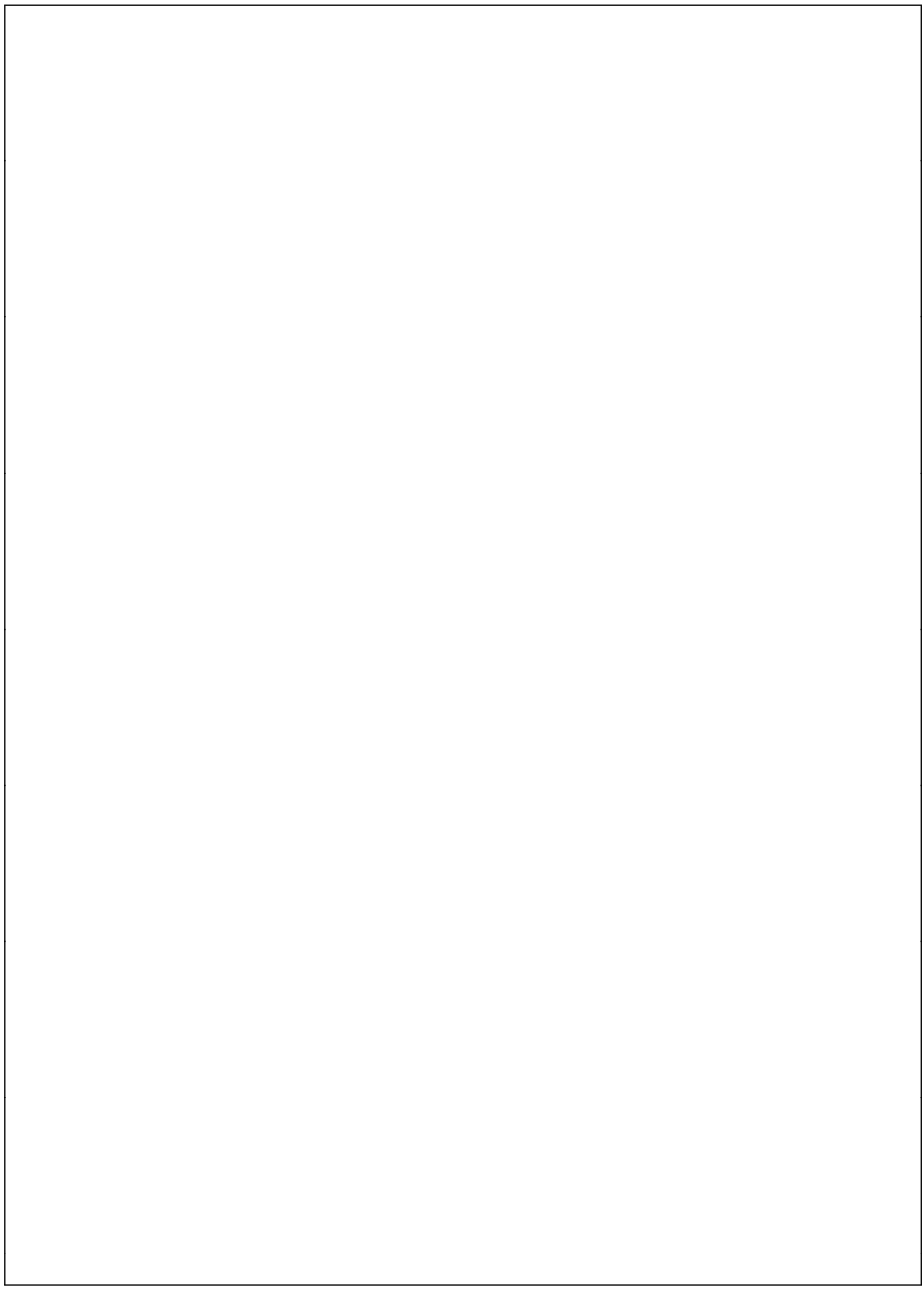

Physical Dimensions inches (millimeters)

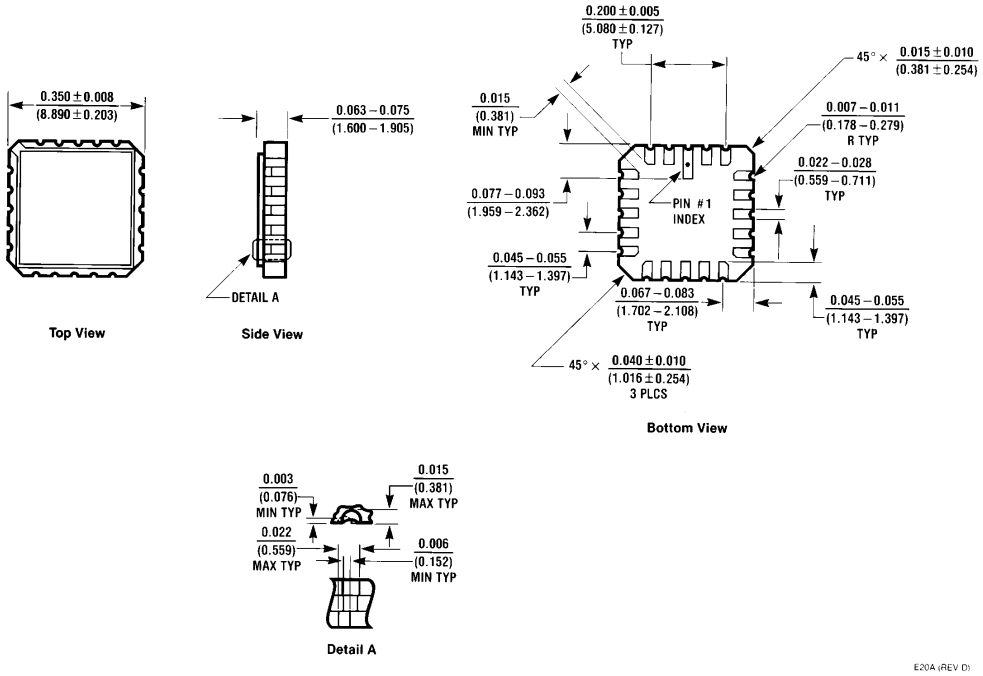

Ceramic Leadless Chip Carrier Package (E)
Order Number 54LS157LMQB or 54LS158LMQB
NS Package Number E20A

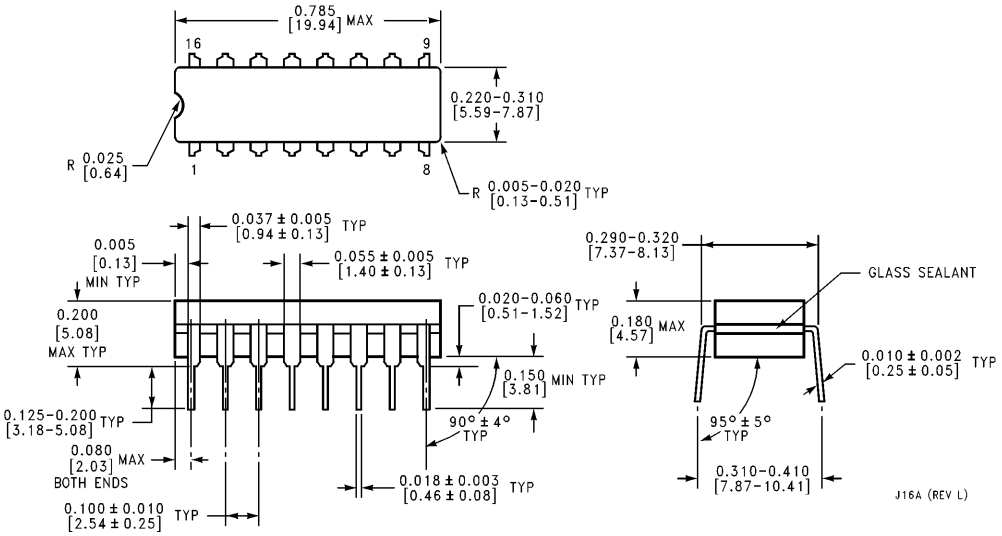

16-Lead Ceramic Dual-In-Line Package (J)
Order Number 54LS157DMQB, 54LS158DMQB, DM54LS157J or DM54LS158J
NS Package Number J16A

Physical Dimensions inches (millimeters) (Continued)

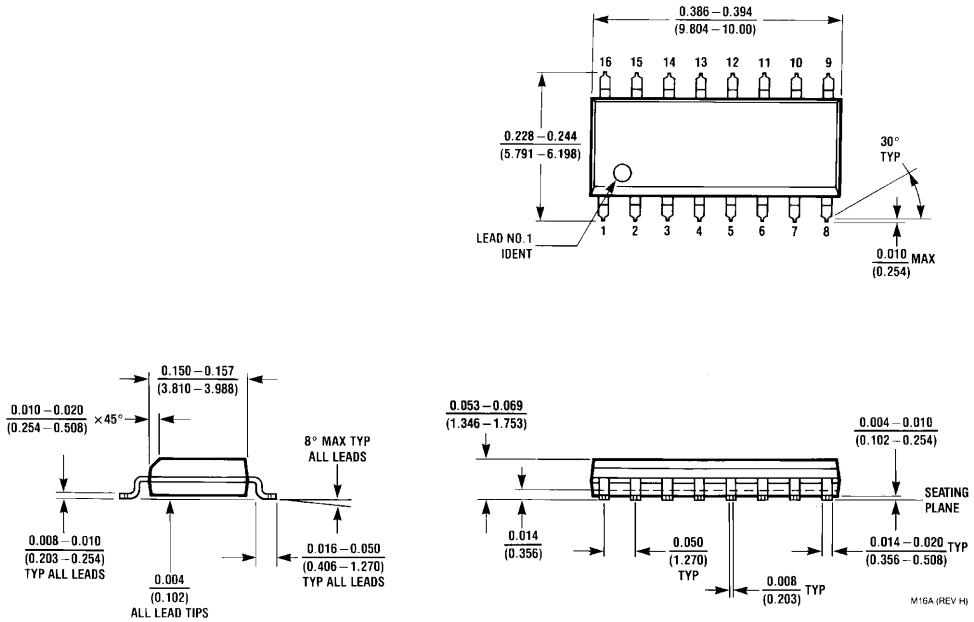

16-Lead Small Outline Molded Package (M)
Order Number DM74LS157M or DM74LS158M
NS Package Number M16A

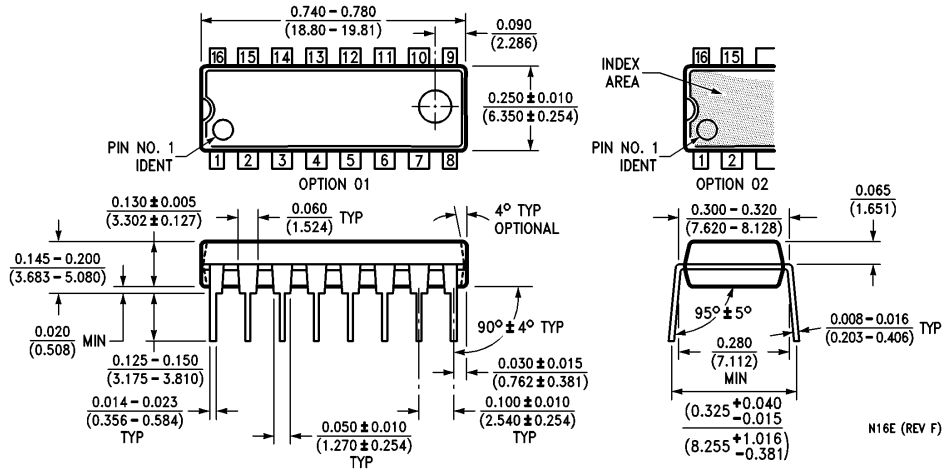

16-Lead Molded Dual-In-Line Package (N)
Order Number DM74LS157N or DM74LS158N
NS Package Number N16E

Physical Dimensions inches (millimeters) (Continued)

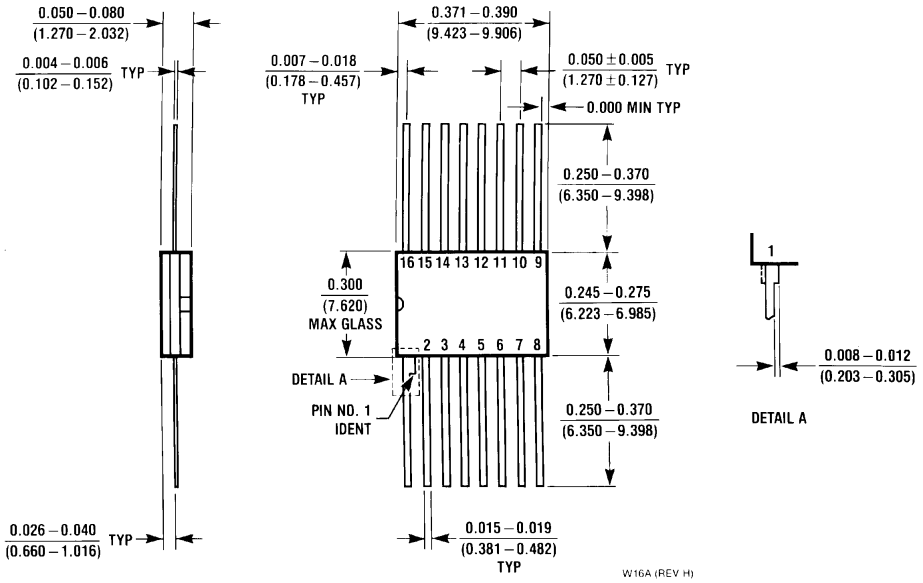

16-Lead Ceramic Flat Package (W)
Order Number 54LS157FMQB, 54LS158FMQB, DM54LS157W or DM54LS158W
NS Package Number W16A

LIFE SUPPORT POLICY

NATIONAL'S PRODUCTS ARE NOT AUTHORIZED FOR USE AS CRITICAL COMPONENTS IN LIFE SUPPORT DEVICES OR SYSTEMS WITHOUT THE EXPRESS WRITTEN APPROVAL OF THE PRESIDENT OF NATIONAL SEMICONDUCTOR CORPORATION. As used herein:

1. Life support devices or systems are devices or systems which, (a) are intended for surgical implant into the body, or (b) support or sustain life, and whose failure to perform, when properly used in accordance with instructions for use provided in the labeling, can be reasonably expected to result in a significant injury to the user.
2. A critical component is any component of a life support device or system whose failure to perform can be reasonably expected to cause the failure of the life support device or system, or to affect its safety or effectiveness.

National Semiconductor Corporation
1111 West Bardin Road
Arlington, TX 76017
Tel: 1(800) 272-9959
Fax: 1(800) 737-7018

National Semiconductor Europe
Fax: (+49) 0-180-530 85 86
Email: cnjwge@tevm2.nsc.com
Deutsch Tel: (+49) 0-180-530 85 85
English Tel: (+49) 0-180-532 78 32
Français Tel: (+49) 0-180-532 93 58
Italiano Tel: (+49) 0-180-534 16 80

National Semiconductor Hong Kong Ltd.
13th Floor, Straight Block,
Ocean Centre, 5 Canton Rd.
Tsimshatsui, Kowloon
Hong Kong
Tel: (852) 2737-1600
Fax: (852) 2736-9960

National Semiconductor Japan Ltd.
Tel: 81-043-299-2309
Fax: 81-043-299-2408

National does not assume any responsibility for use of any circuitry described, no circuit patent licenses are implied and National reserves the right at any time without notice to change said circuitry and specifications.