NINA-B2 series

Stand-alone dual-mode Bluetooth modules

Data sheet

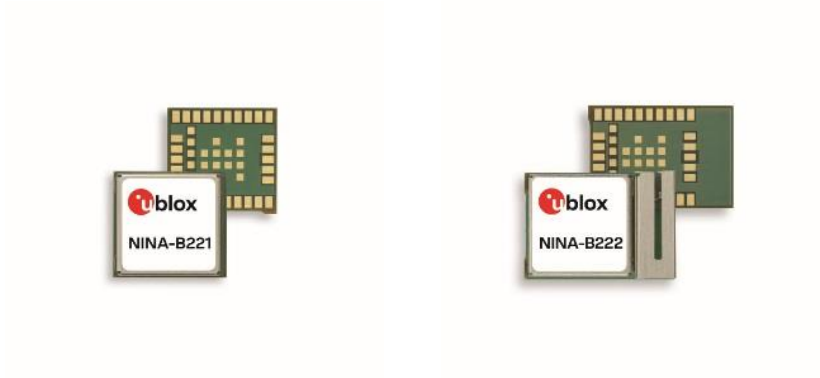

Abstract

This technical data sheet describes the NINA-B2 series stand-alone dual-mode Bluetooth® modules. NINA-B2 modules come with pre-flashed application software, dual-mode Bluetooth (Bluetooth BR/EDR and Bluetooth Low Energy). The module has a number of important security features embedded, including secure boot, which ensures that only authenticated software can run on the module. This makes NINA-B2 ideal for critical IoT applications where security is important.

UBX-18006649 - R10
C1 - Public

Document information

Title	**NINA-B2 series**	
Subtitle	Stand-alone dual-mode Bluetooth modules	
Document type	Data sheet	
Document number	UBX-18006649	
Revision and date	R10	16-Aug-2022
Disclosure Restriction	C1 - Public	

Product status	Corresponding content status	
Functional Sample	Draft	For functional testing. Revised and supplementary data will be published later.
In Development / Prototype	Objective Specification	Target values. Revised and supplementary data will be published later.
Engineering Sample	Advance Information	Data based on early testing. Revised and supplementary data will be published later.
Initial Production	Early Production Information	Data from product verification. Revised and supplementary data may be published later.
Mass Production / End of Life	Production Information	Document contains the final product specification.

This document applies to the following products:

Product name	Type number	u-connectXpress software version	Hardware version	PCN reference	Product status
NINA-B221	NINA-B221-03B-01	4.0.0	08	UBX-21043575	Initial production
NINA-B222	NINA-B222-03B-01	4.0.0	08	UBX-21043575	Initial production

u-blox or third parties may hold intellectual property rights in the products, names, logos and designs included in this document. Copying, reproduction, modification or disclosure to third parties of this document or any part thereof is only permitted with the express written permission of u-blox.
The information contained herein is provided “as is” and u-blox assumes no liability for its use. No warranty, either express or implied, is given, including but not limited to, with respect to the accuracy, correctness, reliability and fitness for a particular purpose of the information. This document may be revised by u-blox at any time without notice. For the most recent documents, visit www.u-blox.com.
Copyright © u-blox AG.

Contents

Document information **2**
Contents **3**
1 Functional description **6**
1.1 Overview 6
1.2 Applications 6
1.3 Block diagram 7
1.4 Product variants 7
1.4.1 NINA-B221 7
1.4.2 NINA-B222 7
1.5 Radio performance 8
1.6 Software options 8
1.6.1 AT command support 8
1.6.2 Software upgrade 8
1.7 MAC addresses 9
2 Interfaces **10**
2.1 Power supply 10
2.1.1 Module supply input (VCC) 10
2.1.2 Digital I/O interfaces reference voltage (VCC_IO) 10
2.2 Low Power Clock 10
2.3 System functions 10
2.3.1 Module power on 10
2.3.2 Module power off 11
2.3.3 Module reset 11
2.3.4 Active mode 11
2.3.5 Standby mode 11
2.3.6 Sleep mode 11
2.3.7 Stop mode 11
2.4 Boot strap pins 12
2.5 RF antenna interface 12
2.5.1 Internal antenna 12
2.5.2 External RF antenna interface 13
2.6 IO signals 13
2.6.1 Drive capability 13
2.6.2 System status IO signals 13
2.6.3 System control IO signals 14
2.6.4 UART IO signals 14
2.7 Data and command interfaces 14
2.7.1 UART 15
2.7.2 SPI 15
3 Pin definition **16**

3.1 Pin assignment 16
4 Electrical specifications 18
4.1 Absolute maximum ratings 18
4.1.1 Maximum ESD ratings 18
4.2 Operating conditions 18
4.2.1 Operating temperature range 19
4.2.2 Supply/Power pins 19
4.2.3 RESET_N pin 19
4.2.4 Digital pins 19
4.2.5 Current consumption 20
4.2.6 Bluetooth radio characteristics 20
4.2.7 Bluetooth Low Energy characteristics 21
4.2.8 Antenna radiation patterns 21
5 Mechanical specifications 23
5.1 NINA-B221 mechanical specification 23
5.2 NINA-B222 mechanical specification 24
6 Qualification and approvals 25
6.1 Country approvals 25
6.2 European Union regulatory compliance 25
6.2.1 Radio Equipment Directive (RED) 2014/53/EU 25
6.2.2 Compliance with the RoHS directive 25
6.3 FCC/IC compliance 25
6.3.1 FCC compliance 25
6.3.2 FCC statement 25
6.3.3 RF-exposure statement 26
6.3.4 End product user manual instructions 26
6.3.5 End product labeling requirements 27
6.3.6 End product compliance 28
6.4 Japan radio equipment compliance 28
6.5 NCC Taiwan compliance 29
6.5.1 Taiwan NCC Warning Statement 29
6.5.2 NINA-B221 labeling requirements for end product 29
6.5.3 NINA-B222 labeling requirements for end product 29
6.6 KCC South Korea compliance 29
6.7 Brazil compliance 30
6.8 Australia and New Zealand regulatory compliance 30
6.9 South Africa regulatory compliance 31
6.10 Safety compliance 31
6.11 Bluetooth qualification information 31
7 Antennas 32
7.1 Antenna accessories 33
7.2 Approved antennas 33

7.2.1 Single band antennas 33
7.2.2 Dual-band antennas 36
8 Product handling 38
8.1 Packaging 38
8.1.1 Reels 38
8.1.2 Tapes 38
8.2 Moisture sensitivity levels 40
8.3 Reflow soldering 40
8.4 ESD precautions 40
9 Labeling and ordering information 41
9.1 Product labeling 41
9.1.1 Product identifiers 42
9.1.2 Identification codes 42
9.2 Ordering information 42
Appendix 43
A Glossary 43
Related documents 44
Revision history 44
Contact 45

1 Functional description

1.1 Overview

The NINA-B2 series comprises small, stand-alone, dual-mode Bluetooth modules designed for ease-of-use and integration in professional applications. The modules are delivered with u-connectXpress software that provides support for both peripheral and central roles, Serial Port Profile, GATT client and server, beacons, and the u-blox Bluetooth Low Energy Serial Port Service – all configurable from a host using AT commands.

NINA-B2 modules provide top grade security, thanks to secure boot, which ensures the module only boots up with original u-blox software. Intended applications include industrial automation, wireless-connected and configurable equipment, point-of-sales, and health devices.

NINA-B222 comes with an internal antenna while NINA-B221 has a pin for use with an external antenna.

NINA-B2 complies with RED standards and is certified as a modular transmitter in the following countries: US (FCC), Canada (IC / ISED RSS), Japan (MIC), Taiwan (NCC), South Korea (KCC), Australia / New Zealand (ACMA), Brazil (Anatel), South Africa (ICASA). The modules are qualified according to ISO 16750 for professional grade operation, supporting an extended temperature range of –40 °C to +85 °C.

1.2 Applications

- Internet of Things (IoT)
- Bluetooth networks
- Telematics
- Point-of-sales
- Medical and industrial networking
- Access to laptops, mobile phones, and similar consumer devices
- Home/building automation
- Ethernet/Wireless gateway

1.3 Block diagram

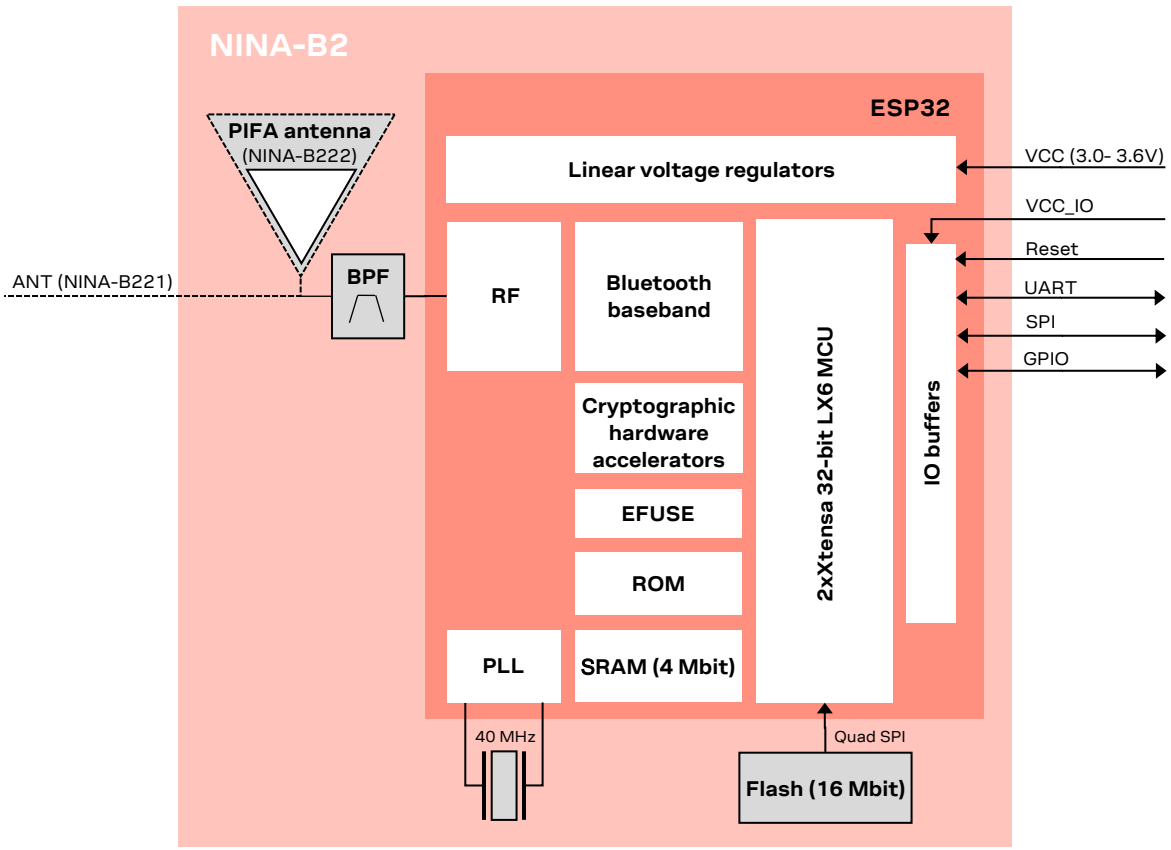

Figure 1: Block diagram of NINA-B2 series

1.4 Product variants

NINA-B2 series modules come with pre-flashed application software, supporting Bluetooth BR/EDR and Bluetooth Low Energy v4.2. The host system can set up and control the module through the AT command interface. For more information about AT commands, see also the u-connectXpress AT commands manual [3].

1.4.1 NINA-B221

The NINA-B221 module has no internal antenna. Instead, the RF signal is available at a module pin for routing to an external antenna or antenna connector. The module outline is smaller in comparison to the module variants that include an antenna, only 10.0 x 10.6 mm. The module height is 2.2 mm.

1.4.2 NINA-B222

The NINA-B222 module has an internal PIFA antenna mounted on the module. The RF signal is not connected to any module pin. The module outline is 10.0 x 14.0 mm and the height 3.8 mm.

1.5 Radio performance

NINA-B2 modules support Bluetooth BR/EDR and Bluetooth Low Energy (LE) as described in Table 1.

Bluetooth BR/EDR	Bluetooth Low Energy
Bluetooth v4.2+EDR Maximum number of Peripherals: 7	Bluetooth LE 4.2 dual-mode
Band support 2.4 GHz, 79 channels	Band support 2.4 GHz, 40 channels
Typical conducted output power - 1 Mbit/s: 5 dBm - 2/3 Mbit/s: 5 dBm	Typical conducted output power 5 dBm
Typical radiated output power - 1 Mbit: 8 dBm EIRP* - 2/3 Mbit/s: 8 dBm EIRP*	Typical radiated output power 8 dBm EIRP*
Conducted sensitivity -88 dBm	Conducted sensitivity -88 dBm
Data rates: 1 / 2 / 3 Mbit/s	Data rates: 1 Mbit/s

* RF power including maximum antenna gain (3 dBi).

Table 1: NINA-B2 series Bluetooth characteristics

1.6 Software options

NINA-B2 series modules come with the pre-flashed application software, supporting Bluetooth BR/EDR and Bluetooth Low Energy. The host system can set up and control the module through the AT command interface. NINA-B2 modules provide top grade security, thanks to secure boot, which ensures the module boots up only with original u-blox software. This makes NINA-B2 ideal for critical IoT applications where security is important.

1.6.1 AT command support

You can configure NINA-B2 modules with the u-blox s-center toolbox software using AT commands. See also the u-connectXpress AT commands manual [3] and u-connectXpress software user guide [7].

The s-center evaluation software supporting the AT commands is also available free of charge and can be downloaded from the u-blox website. See also the s-center user guide [8].

1.6.2 Software upgrade

For information on how to upgrade the software for NINA-B2 series, see System control IO signals and the NINA-B2 series system integration manual [1].

1.7 MAC addresses

NINA-B2 series modules have four unique consecutive MAC addresses that are reserved for each module. The addresses are stored in the configuration memory during production. The first Bluetooth address is available in the Data Matrix on the label. See also Product labeling.

MAC address	Assignment	Last bits of MAC address	Example
Module 1, address 1	Bluetooth	00	*D4:CA:6E:90:04:90*
Module 1, address 2	Reserved	01	*D4:CA:6E:90:04:91*
Module 1, address 3	Reserved	10	*D4:CA:6E:90:04:92*
Module 1, address 4	Reserved	11	*D4:CA:6E:90:04:93*
Module 2, address 1	Bluetooth	00	D4:CA:6E:90:04:94
Module 2, address 2	Reserved	01	D4:CA:6E:90:04:95
Module 2, address 3	Reserved	10	D4:CA:6E:90:04:96
Module 2, address 4	Reserved	11	D4:CA:6E:90:04:97

Table 2: Example MAC addresses assignment for two modules

2 Interfaces

2.1 Power supply

The power for NINA-B2 series modules is supplied through **VCC** and **VCC_IO** pins by DC voltage.

☞ The system power supply circuit must be able to support peak power (add 20% as margin over the listed current consumption), as during operation, the current drawn from **VCC** and **VCC_IO** can vary significantly based on the use cases.

2.1.1 Module supply input (VCC)

NINA-B2 series modules use an integrated Linear Voltage converter to transform the supply voltage presented at the **VCC** pin into a stable system voltage.

2.1.2 Digital I/O interfaces reference voltage (VCC_IO)

All modules in the NINA-B2 series provide an additional voltage supply input for setting the I/O voltage level. The separate **VCC_IO** pin enables integration of the module in many applications with different voltage levels (for example, 1.8 V or 3.3 V) without any level converters. NINA-B2 modules support only 3.3 V as IO voltage level currently.

2.2 Low Power Clock

The internal clocks in NINA-B2 are used for the lowest power modes.

2.3 System functions

NINA-B2 series modules are power efficient devices capable of operating in different power saving modes and configurations. Different sections of the modules can be powered off when they are not needed, and complex wake up events can be generated from different external and internal inputs.

The next sections describe the system power modes in detail as well as power-on/off and reset behavior, and boot strapping options.

The following system power modes available:

- Automatic:
  - Active mode
  - Standby mode
- Manual:
  - Sleep mode
  - Stop mode

2.3.1 Module power on

You can switch on or reboot the NINA-B2 series modules in one of the following ways:

- Rising edge on the VCC pin to a valid supply voltage
- Issuing a reset of the module. See also Module reset.

If the u-connectXpress software has been configured to start in AT mode, `+STARTUP` will be sent over the UART interface when the software has booted and is ready to accept commands.

2.3.2 Module power off

There is no dedicated pin to power down the NINA-B2 series modules. Instead, the “Stop” power mode can be used to keep the module the module in the deepest power save mode. The stop mode is more power efficient than holding the module in reset.

2.3.3 Module reset

NINA-B2 series modules can be reset (rebooted) in the following way:

- Low level on the **RESET_N** pin, which is normally set high by an internal pull-up. This results in a “hardware” reset of the module. The **RESET_N** signal should be driven by an open drain, open collector or contact switch.

☞ NINA-B2 series modules can be reset using an AT command `+CPWROFF`. This causes a “software reset” of the module. See also u-connectXpress AT commands manual [3].

☞ Holding the module in reset does not yield the lowest power consumption. For performance that consumes the least power, put the module into stop mode. See also Stop mode.

2.3.4 Active mode

In this mode, NINA-B2 actively receives and transmits or data over one or more of its interfaces; 2.4 GHz radio, UART, etc. The module automatically switches between Active mode and Standby mode and seamlessly transitions between the two modes without user involvement. The module CPU operates at its highest clock speed in this mode.

2.3.5 Standby mode

In this mode, the module is “idling” and operates only as a background activity. Radio or physical connections are maintained, and no data packets received in this mode are lost. When required, NINA-B2 automatically enters Active mode without delay.

Users can further decrease the current consumption in Standby mode by:

- Enabling Automatic Frequency Adaption (AFA)
- Increasing the Bluetooth low energy connection interval

Automatic Frequency Adaption (AFA) allows the internal clocks to be automatically reduced whenever possible. AFA is configured using the `AT+UPWRMNG` command.

☞ Enabling AFA can put limits on certain module functions, maximum UART baud rate, etc. Check the u-connectXpress AT commands manual [3] to determine which clock speeds are acceptable for your application.

☞ For more information about how to configure u-connectXpress software using AT commands, see the u-connectXpress AT commands manual [3] and u-connectXpress software user guide [7].

2.3.6 Sleep mode

☞ Sleep mode is not available in NINA-B2.

2.3.7 Stop mode

Stop mode is the deepest power saving mode of NINA-B2 modules. During Stop mode, all functionality is stopped to ensure minimum power consumption; all existing connections are dropped, and the system RAM is not retained. The module always reboots when waking up from Stop mode.

Stop mode must be actively entered into by the user in one of the following ways:

- Using the AT&D4 command, and the UART **DSR** pin to enter/leave Stop mode
- Using the AT+USTOP command, and a GPIO pin set by the user to enter/leave Stop mode. For information describing what GPIOs are capable of controlling Stop mode, see Table 5.
- Using the AT+USTOP command and setting a timer to automatically wake up after a delay set by the user.

If the u-connectXpress software has been configured to start in AT mode, +STARTUP is sent over the UART interface when the software has booted and is ready to accept commands.

☞ See the u-connectXpress AT commands manual [3] and u-connectXpress software user guide [7] for more information on how to use AT commands to configure the u-connectXpress software.

2.4 Boot strap pins

There are several boot configuration pins available on the module that must have the correct settings during boot. See also Table 3. The boot strap pins are configured to the default state internally on the module and must NOT be configured externally.

During boot, pin 32 controls if additional system information should be transmitted on the UART interface during startup. After the system has booted, it is reconfigured to **SPI_CS,** the SPI chip select signal.

During boot, pin 36 controls the voltage level of the internal flash during startup. After the system has booted, it is reconfigured to **SPI_MISO**, the SPI slave data output signal. It must NOT be pulled down by an external MCU or circuitry

Pin	State during boot	Default	Behavior	Description
27	0		ESP boot mode (factory boot)	ESP Factory boot Mode
	1	Pull-up*	Normal Boot from internal Flash	
32	0		Silent	Printout on UART0 TXD during boot
	1	Pull-up*	UART0 TXD Toggling	
36	0		VDD_SDIO=3.3V (Not allowed)	Internal flash voltage
	1	10 kΩ pull-up	VDD_SDIO=1.8V (VDD_SDIO should always be at 1.8 V)	

*Nominally 45 kΩ

Table 3: NINA-B2 series boot strapping pin

2.5 RF antenna interface

The RF antenna interface of the NINA-B2 series supports Bluetooth BR/EDR and Bluetooth Low Energy on the same RF antenna signal. The module is equipped with a 2.4 GHz bandpass filter between the radio chip and RF antenna interface. See also Block diagram.

The NINA-B2 series supports either an internal antenna (NINA-B222) or external antennas connected through an antenna pin (NINA-B221).

2.5.1 Internal antenna

NINA-B222 has internal antenna specifically designed and optimized for the NINA module, which is a 2.4 GHz PIFA antenna.

It is recommended to place the NINA-B222 module in such a way that the internal antenna is in the corner of the host PCB (the corner closest to Pin 16 should be in the corner). The antenna side (short side closest to the antenna), positioned along one side of the host PCB ground plane is the second best option.

For NINA-B222 keep a minimum clearance of 5 mm between the antenna and the casing. Keep a minimum of 10 mm free space from the metal around the antenna including the area below. If a metal enclosure is required, use NINA-B221 and an external antenna. It is beneficial to have a large solid ground plane on the host PCB and have a good grounding on the module. Minimum ground plane size is 24x30 mm but recommended is more than 50x50 mm.

See the NINA-B2 series system integration manual [1] for more antenna related design information.

⚠ The ANT signal is not available at the solder pins of the NINA-B222 module.

2.5.2 External RF antenna interface

The NINA-B221 module has an antenna signal (**ANT**) pin with a characteristic impedance of 50 Ω for using an external antenna. The antenna signal supports both Tx and Rx.

The external antenna, for example, can be an SMD antenna (or PCB integrated antenna) on the host board. An antenna connector for using an external antenna via a coaxial cable could also be implemented. A cable antenna might be necessary if the module is mounted in a shielded enclosure such as a metal box or cabinet.

An external antenna connector (U.FL. connector) reference design (see NINA-B2 series system integration manual [1]) is available and must be followed to comply with the NINA-B2 FCC/IC modular approvals. See also Approved antennas.

2.6 IO signals

NINA-B2 series modules support a versatile pin-out with up to 16 GPIO pins.

2.6.1 Drive capability

All GPIO pins are normally configured for medium current consumption. Using this standard drive capability, a pin configured as an output can source and an input sink a certain amount of current. See also Digital pins.

2.6.2 System status IO signals

The **RED**, **GREEN** and **BLUE** pins are used to signal the status. The pins are active low and are intended to be routed to an RGB LED. See the u-connectXpress AT commands manual [3] for more information about connectivity software signals IOs.

Mode	Status	RGB LED color	GREEN	BLUE	RED
Data mode	IDLE	Green	LOW	HIGH	HIGH
Command mode	IDLE	Orange	LOW	HIGH	LOW
Data mode, Command mode	CONNECTING*	Purple	HIGH	LOW	LOW
Data mode, Command mode	CONNECTED*	Blue	HIGH	LOW	HIGH

* = LED flashes on data activity

Table 4: System status indication

2.6.3 System control IO signals

The following input signals are used to control the system:

- **RESET_N** is used to reset the system. See also IO signals.
- If **SWITCH_1** is driven low during start up, the UART serial settings are restored to their default values.
- **SWITCH_2** can be used to open a connection to a peripheral device.
- If both **SWITCH_1** and **SWITCH_2** are driven low during start up, the system will enter the bootloader mode.
- If both **SWITCH_1** and **SWITCH_2** are driven low during start up and held low for 10 seconds, the system will exit the bootloader mode and restore all settings to their factory defaults.

For more information about connectivity software signals IOs, see also the u-connectXpress AT commands manual [3].

2.6.4 UART IO signals

In addition to the normal **RXD**, **TXD**, **CTS,** and **RTS** signals, NINA-B2 software adds the **DSR** and **DTR** pins to the UART interface. See also UART. Note that these signals are not used as originally intended but are used instead to control the state of the NINA module. Depending on the current configuration, the **DSR pin** can be used to:

- Enter command mode
- Disconnect and/or toggle connectable status

If **CTS/RTS** flow control is disabled, those pins can be used as GPIOs.

2.7 Data and command interfaces

There are two data interfaces available on a NINA-B2 module: UART and SPI. Both interfaces cannot be used at the same time. After the module has booted, the module will check for activity on both interfaces to determine which of the interfaces should be used. AT commands can always be used to enable or disable interfaces manually. Figure 2 shows the startup and interface selection procedure.

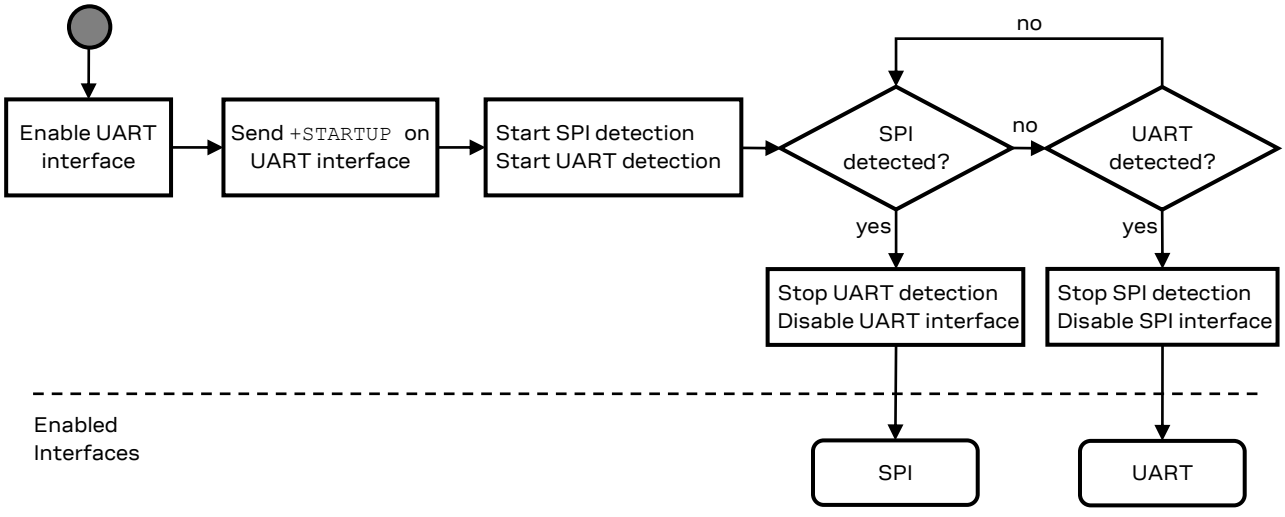

Figure 2: Interface detection flow chart

+STARTUP will always be printed on the UART **TXD** line.

When the SPI detection is started, the NINA-B2 module will start toggling the **SPI_DRDY** signal periodically. Once the SPI master has sent 8 clock signals on the **SPI_SCLK** line, the SPI interface is considered to be active and the UART interface is disabled.

If an AT command is sent to the NINA-B2 module over the UART interface, the UART interface will be considered "detected", and the **SPI_DRDY** signal will stop toggling and the SPI interface will be disabled.

For more information about using these data and command interfaces, see also the u-connectXpress software user guide [7].

2.7.1 UART

NINA-B2 modules include a 6-wire UART for communication with an application host processor (AT commands, Data communication and software upgrades).

The following UART signals are available:

- Data lines (**RXD** as input, **TXD** as output)
- Hardware flow control lines (**CTS** as input, **RTS** as output)
- Link status (**DSR** as input, **DTR** as output). The **DSR/DTR** signals behavior is adapted to the u-connectXpress software functionality and differs from the UART standard. See also UART IO signals.
- Programmable baud-rate generator allows most industry standard rates, as well as non-standard rates up to 3 Mbaud.
- Frame format configuration:
  - 8 data bits
  - Even or no-parity bit
  - 1 stop bit
- 8N1default frame configuration with eight (8) data bits, no (N) parity bit, and one (1) stop bit.

2.7.2 SPI

The serial peripheral interface of NINA-B2 only runs in "SPI slave mode", meaning a host controller running in "SPI master mode" is intended to send commands to the NINA module.

The following signals are used:

- **SPI_SCLK** – Serial clock input signal
- **SPI_MOSI** – Serial data input signal
- **SPI_MISO** – Serial data output signal
- **SPI_CS** – Chip Select input, enable control signal
- **SPI_DRDY** – (optional) Additional "Data Ready" output signal, used to indicate to the controller when data is available. This signal is enabled by default but can be disabled.
- **SPI_NORX** – (optional) Additional flow control output signal used to indicate when the NINA module cannot receive any more data. This signal is not enabled by default.

An SPI master must comply with the following:

- 10 MHz maximum clock speed
- SPI mode 1 or 3
- The SPI master must clock at least 8 bytes minimum and 4096 bytes maximum per transaction, and transaction lengths must be on 4 byte boundary

☞ See the following application note for more information on how to use the SPI interface [6].

3 Pin definition

3.1 Pin assignment

Figure 3 describes the pin configuration used in the NINA-B2 u-connectXpress software modules.

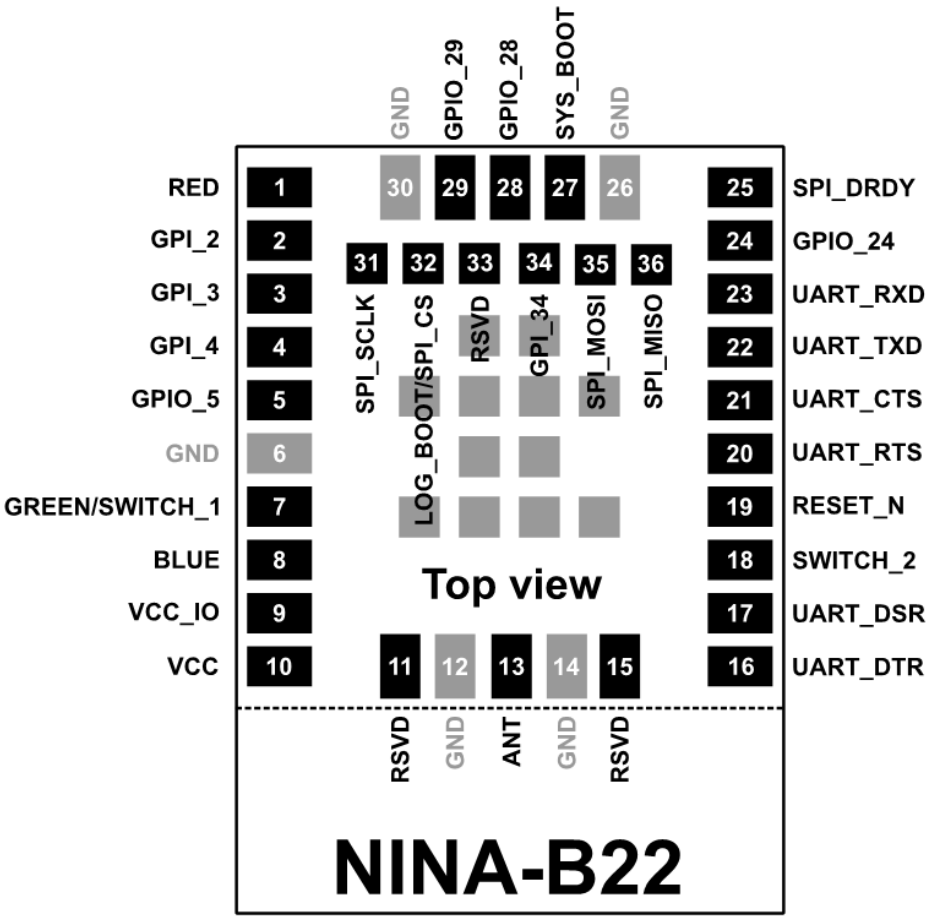

Figure 3: NINA-B22x pin assignment (top view)

The grey pins in the center of the modules are GND pins. The lower part below the dotted line is the antenna part of NINA-B222 and the outline of the NINA-B221 module ends at this line.

Some of the signals are boot strap signals (see Table 5). It is important that these signals are in the correct state during startup. See also Boot strapping pins.

For more information describing IO functionality, see also IO signals.

Pin	Name	I/O	Description	Alt. function	Remarks
1	RED	O	Logic Red LED signal		For more information about IO functionality, see also System status IO signals
2	GPI_2	I	General Purpose Input	WKUP_2	Can control Stop mode
3	GPI_3	I	General Purpose Input	WKUP_3	Can control Stop mode
4	GPI_4	I	General Purpose Input	WKUP_4	Can control Stop mode
5	GPIO_5	I/O	General Purpose Input /Output		

Pin	Name	I/O	Description	Alt. function	Remarks
6	GND		Ground		
7	GREEN/ SWITCH_1	I/O	GREEN: System status signal / SWITCH_1: Multiple functions		Active low See also System status IO signals and System control IO signals
8	BLUE	O	Logic Blue LED Signal		See also System status IO signals
9	VCC_IO	I	Module I/O level voltage input		IO voltage supply
10	VCC	I	Module supply voltage input		Module voltage supply
11	RSVD		Reserved for future use		Do not connect
12	GND		Ground		
13	ANT	I/O	Antenna Tx/Rx interface		50 Ω nominal characteristic impedance
14	GND		Ground		
15	RSVD		Reserved for future use		Do not connect
16	UART_DTR	O	UART Data Terminal Ready		The DTR signaling is not according to UART standard See also UART IO signals.
17	UART_DSR	I	UART Data Set Ready		The DSR signaling is not according to UART standard. See also UART IO signals
18	SWITCH_2	I	Multiple functions	WKUP_18	Active low. See also System control IO signals. Can control Stop mode.
19	RESET_N	I	External system reset input		Active low
20	UART_RTS	O	UART request to send	GPIO_20	Active low See also UART IO signals
21	UART_CTS	I	UART clear to send	GPIO_21	Active low See also UART IO signals
22	UART_TXD	O	UART data output		See also UART
23	UART_RXD	I	UART data input		See also UART
24	GPIO_24	I/O	General Purpose Input /Output		
25	SPI_DRDY	O	SPI data ready output	GPO_25	See also SPI
26	GND		Ground		
27	SYS_BOOT	I	Software download	GPIO_27	Default pulled-up. See also Boot strapping pins.
28	GPIO_28	I/O	General Purpose Input /Output		
29	GPIO_29	I/O	General Purpose Input /Output		
30	GND		Ground		
31	SPI_SCLK	I	SPI clock input signal	GPIO_31 WKUP_31	Can control Stop mode See also SPI
32	LOG_BOOT/ SPI_CS	I	Debug printout on UART enable/ SPI chip select signal	GPIO_32	Default pulled-up See also Boot strapping pins and SPI
33	RSVD		Reserved for future use		Do not connect
34	GPI_34	I	General Purpose Input	WKUP_34	Can control Stop mode
35	SPI_MOSI	I	SPI serial data in signal	GPIO_35 WKUP_34	Can control Stop mode See also SPI
36	SPI_MISO	O	SPI serial data out signal	GPO_36	Default pulled-up See also Boot strapping pins and SPI

Table 5: NINA-B2 pinout

4 Electrical specifications

⚠ Stressing the device above one or more of the ratings listed in Absolute maximum ratings can cause permanent damage. These are stress ratings only. Operating the module at these or at any conditions other than those specified in the Operating conditions should be avoided. Exposure to absolute maximum rating conditions for extended periods can affect device reliability.

☞ All given application information is only advisory and does not form part of the specification.

4.1 Absolute maximum ratings

Symbol	Description	Condition	Min	Max	Unit
VCC/ VCC_IO	Module supply voltage	Input DC voltage at VCC and VCC_IO pins	-0.3	3.6	V
$I_{VCC\ MAX}$ + $I_{VCC_IO\ MAX}$	Absolute maximum power consumption			500	mA
DPV	Digital pin voltage	Input DC voltage at any digital I/O pin	-0.3	3.6	V
P_ANT	Maximum power at receiver	Input RF power at antenna pin		0	dBm
Tstr	Storage temperature		-40	+85	°C

Table 6: Absolute maximum ratings

⚠ The product is not protected against overvoltage or reversed voltages. If necessary, voltage spikes exceeding the power supply voltage specification, given in table above, must be limited to values within the specified boundaries by using appropriate protection devices.

4.1.1 Maximum ESD ratings

Parameter	Min	Typ	Max	Unit	Remarks
ESD immunity			±8*	kV	Indirect discharge according to IEC 61000-4-2
ESD sensitivity, tested for all pins except RSVD and ANT pins #11, #15, #13			2.0	kV	Human body model according to JEDEC JS001

*Tested on EVK-NINA-B2 evaluation board.

Table 7: Maximum ESD ratings

⚠ NINA-B2 series modules are Electrostatic Sensitive Devices and require special precautions while handling. See also ESD precautions.

4.2 Operating conditions

⚠ Operation beyond the specified operating conditions is not recommended and extended exposure beyond them may affect device reliability.

☞ Unless otherwise specified, all operating condition specifications are at an ambient temperature of 25 °C and at a supply voltage of 3.3 V.

4.2.1 Operating temperature range

Parameter	Min	Max	Unit
Operating temperature	-40*	+85	°C

* See the voltage supply condition for lowest temperature range in Supply/Power pins.

Table 8: Temperature range

4.2.2 Supply/Power pins

Symbol	Parameter	Condition	Min	Typ	Max	Unit
VCC	Input supply voltage	Ambient temperature -20 °C to +85 °C	3.00	3.30	3.60	V
		Ambient temperature -40 °C to +85 °C	3.00	3.30	3.45	V
VCC_IO	I/O reference voltage	Ambient temperature -20 °C to +85 °C	3.00	3.30	3.60	V
		Ambient temperature -40 °C to +85 °C	3.00	3.30	3.45	V

Table 9: Input characteristics of voltage supply pins

4.2.3 RESET_N pin

Pin name	Parameter	Min	Typ	Max	Unit
RESET_N	Low-level input	0		0.3*VCC	V
	Internal pull-up resistance		100		kΩ
	Internal capacitance		10		nF
t_Startup	Startup time after release of reset		2.6		s

Table 10: RESET_N pin characteristics

4.2.4 Digital pins

Pin name	Parameter	Min	Typ	Max	Unit	Remarks
Any digital pin	Input characteristic: Low-level input	0		0.3*VCC_IO	V	
	Input characteristic: high-level input	0.7*VCC_IO		VCC_IO	V	
	Output characteristic: Low-level output	0		0.4	V	
	Output characteristic: High-level output	VCC_IO-0.4		VCC_IO	V	
	Drive strength			12	mA	Source/sink
	Pull-up/pull-down resistance		45		kΩ	

Table 11: Digital pin characteristics

4.2.5 Current consumption

Table 12 shows the typical and peak current consumption for NINA-B2 modules using u-connectXpress v4.0.0 software. Unless stated otherwise, the module is powered at 3.3 V and uses factory default configurations.

Radio mode	Activity	Power mode	Role	Typ	Unit	Remarks
Bluetooth BR/EDR (Bluetooth LE disabled)	Transmitting	Active	Peripheral/Central	150	mA	Data throughput 1.25 Mbit/s
	Receiving	Active	Peripheral/Central	110	mA	Data throughput 1.25 Mbit/s
	Connected	Standby*	Peripheral/Central	100	mA	
	Inquiry	Standby*	-	100	mA	
Bluetooth LE	Transmitting	Active	Peripheral/Central	60	mA	Data throughput 30 kbit/s
				80	mA	Data throughput 180 kbit/s
	Receiving	Active	Peripheral/Central	50	mA	Data throughput 30 kbit/s
				60	mA	Data throughput 180 kbit/s
	Connected	Standby*	Peripheral	35	mA	
			Central	35	mA	
	Advertising	Standby*	Peripheral	30	mA	
	Discovery	Standby*	Central	100	mA	
	Idle	Standby*	Central	60	mA	
Disabled	None	Standby*	-	30	mA	
		Sleep	-	N/A	-	Not available in NINA-B2
		Stop	-	5	uA	
	Reset	Reset	-	35	uA	Module held in reset

Table 12: Current consumption of a NINA-B2 during typical use cases

*AFA enabled, minimum allowed clock speed set to 80 MHz.

4.2.6 Bluetooth radio characteristics

V_{CC} = 3.3 V, T_{amb} = 25 °C

Parameter	Operation Mode	Specification	Unit
RF Frequency Range		2.400 – 2.4835	GHz
Supported Modes		Bluetooth v4.2+EDR	
Number of channels		79	
Modulation	1 Mbps	GFSK (BDR)	
	2 Mbps	π/4-DQPSK (EDR)	
	3 Mbps	8-DPSK (EDR)	
Conducted Transmit Power	1 Mbps	5 ± 1	dBm
	2/3 Mbps	5 ± 1	dBm
Conducted Receiver Sensitivity	1 Mbps	-88 ± 2	dBm
	2 Mbps	-86 ± 2	dBm
	3 Mbps	-80 ± 2	dBm

Table 13: Bluetooth radio characteristics

4.2.7 Bluetooth Low Energy characteristics

V_{CC} = 3.3 V, T_{amb} = 25 °C

Parameter	Specification	Unit
RF Frequency Range	2.400 – 2.4835	GHz
Supported Modes	Bluetooth v4.2	
Number of channels	40	
Modulation	GFSK	
Conducted Transmit Power	5 ± 1	dBm
Conducted Receiver Sensitivity	-88 ± 2	dBm

Table 14: Bluetooth Low Energy characteristics

4.2.8 Antenna radiation patterns

The energy radiated from the internal PIFA antenna supported in NINA-B222 is represented in the radiation patterns shown in Table 15.

Figure 4 provides an overview of the measurement procedure and shows how the NINA-B222 module is aligned with the XYZ-coordinate system. The procedure requires measurements to be taken in all positions shown as dots (left), with the subsequent measurements represented as grid points in the radiation pattern (right).

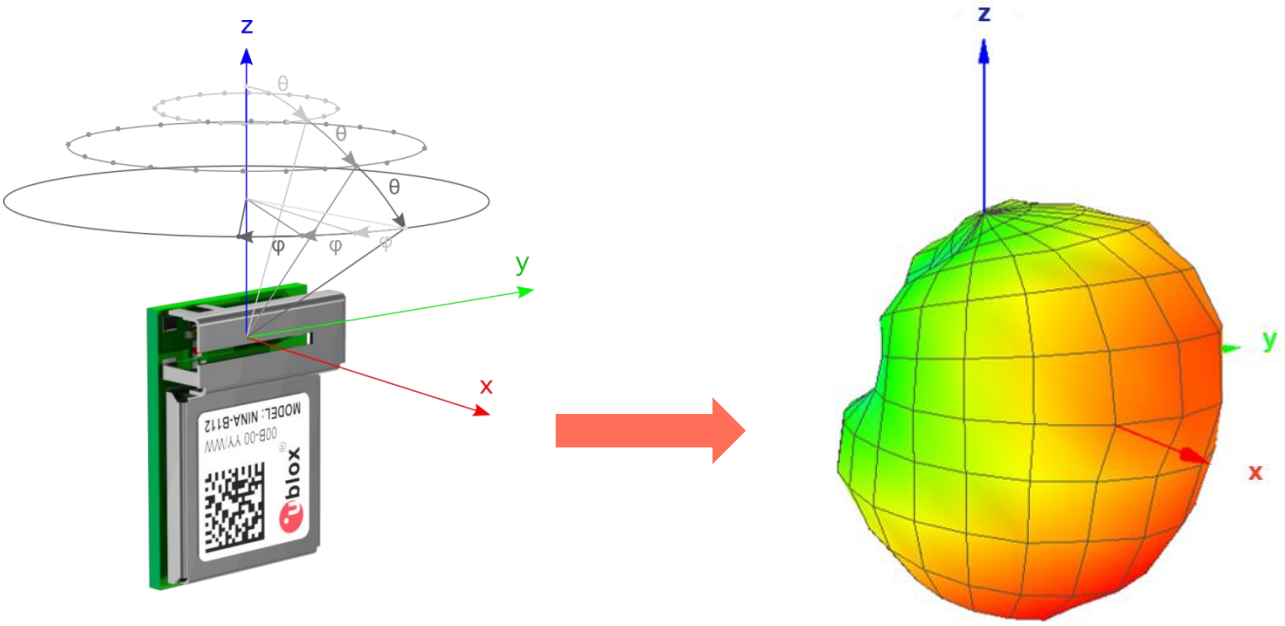

Figure 4: Measurement procedure for determining radiation patterns

Table 15 shows the radiation patterns of the internal PIFA antenna in NINA-B222.

Theta = 0, Phi = 0 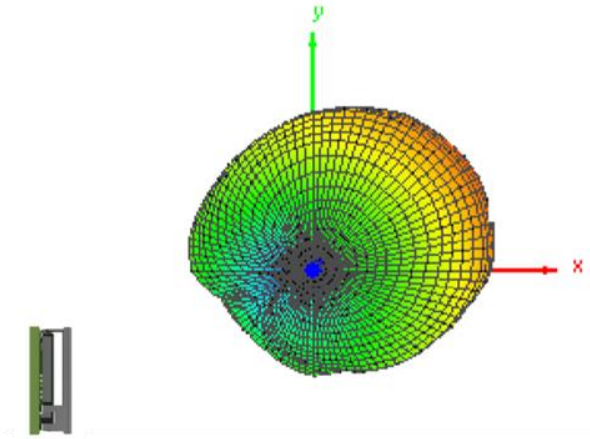	Theta = 180, Phi = 0 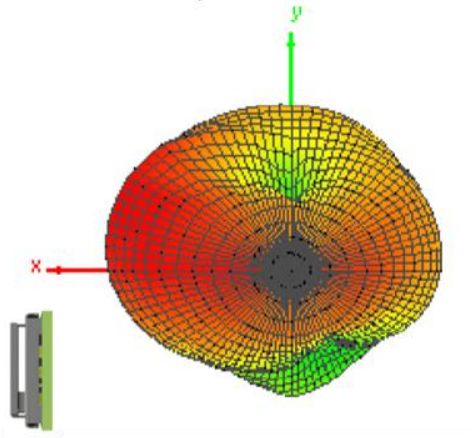
Theta = 90, Phi = 0 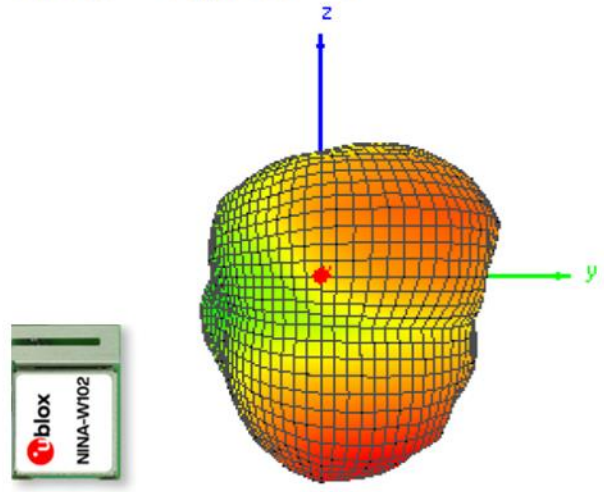	Theta = 90, Phi = 180 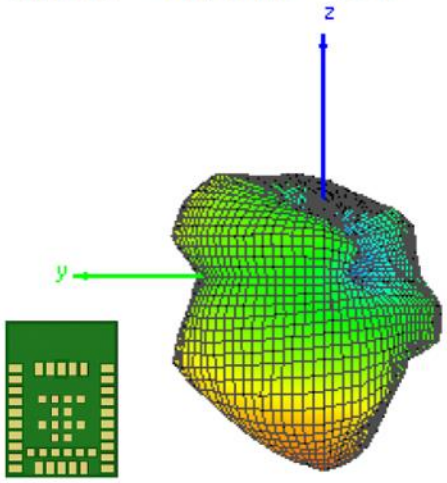
Theta = 90, Phi = 270 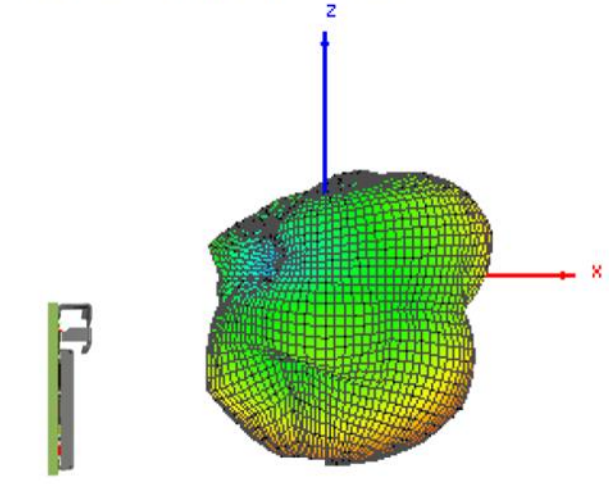	Theta = 90, Phi = 90 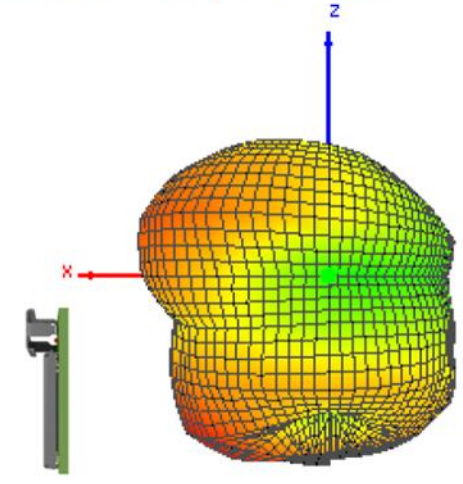

Table 15: NINA-B222 antenna radiation patterns

5 Mechanical specifications

5.1 NINA-B221 mechanical specification

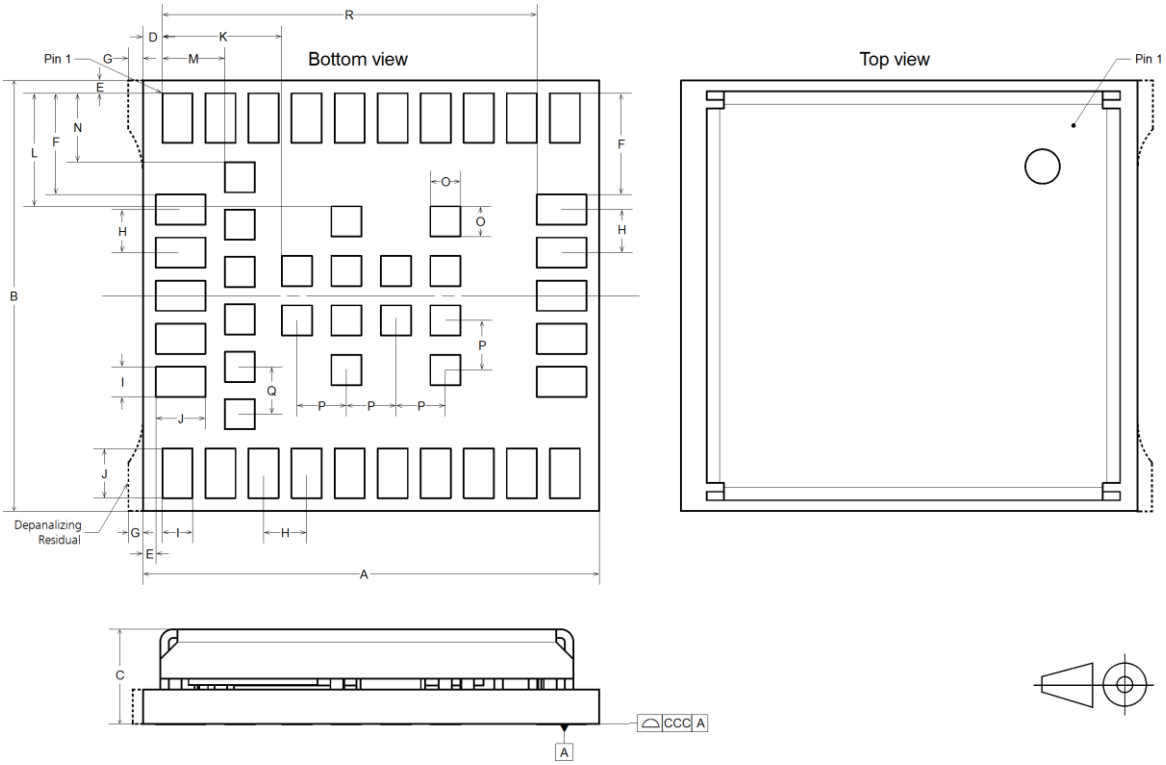

Figure 5: NINA-B221 mechanical outline

Parameter	Description	Typical		Tolerance	
A	Module PCB length [mm]	10.6	(417.3 mil)	+0.20/-0.10	(+7.9/-3.9 mil)
B	Module PCB width [mm]	10.0	(393.7 mil)	+0.20/-0.10	(+7.9/-3.9 mil)
C	Module thickness [mm]	2.2	(86.6 mil)	+0.40/-0.20	(+15.8/-7.9
ccc	Seating plane coplanarity [mm]	0.10	(3.9 mil)	+0.02/-0.10	(+0.8/-3.9 mil)
D	Horizontal edge to lateral pin 1 edge [mm]	0.45	(17.7 mil)	+0.10/-0.10	(+3.9/-3.9 mil)
E	Vertical and horizontal edge to lateral pin 1 edge [mm]	0.30	(11.8 mil)	+0.10/-0.10	(+3.9/-3.9 mil)
F	Vertical pin 1 edge to lateral pin edge [mm]	2.35	(92.5 mil)	+0.05/-0.05	(+2.0/-2.0 mil)
G	Depanalizing residual [mm]	0.10	(3.9 mil)	+0.25/-0.10	(+9.8/-3.9 mil)
H	Lateral and antenna row pin to pin pitch [mm]	1.0	(39.4 mil)	+0.05/-0.05	(+2.0/-2.0 mil)
I	Lateral and antenna row pin width [mm]	0.70	(27.6 mil)	+0.05/-0.05	(+2.0/-2.0 mil)
J	Lateral and antenna row pin height [mm]	1.15	(45.3 mil)	+0.05/-0.05	(+2.0/-2.0 mil)
K	Horizontal pin 1 edge to central pin edge [mm]	2.78	(109.4 mil)	+0.05/-0.05	(+2.0/-2.0 mil)
L	Vertical pin 1 edge to central pin edge [mm]	2.63	(103.5 mil)	+0.05/-0.05	(+2.0/-2.0 mil)
M	Horizontal pin 1 edge to inner row pin edge [mm]	1.45	(57.1 mil)	+0.05/-0.05	(+2.0/-2.0 mil)
N	Vertical pin 1 edge to Inner row pin edge [mm]	1.6	(63.0 mil)	+0.05/-0.05	(+2.0/-2.0 mil)
O	Central pin and inner row width and height [mm]	0.70	(27.6 mil)	+0.05/-0.05	(+2.0/-2.0 mil)
P	Central pin to central pin pitch [mm]	1.15	(45.3 mil)	+0.05/-0.05	(+2.0/-2.0 mil)
Q	Inner row pin to pin pitch [mm]	1.1	(43.3 mil)	+0.05/-0.05	(+2.0/-2.0 mil)
R	Horizontal pin 1 edge to antenna row pin edge [mm]	8.7	(342.5 mil)	+0.05/-0.05	(+2.0/-2.0 mil)
	Module Weight [g]	<1.0			

Table 16: NINA-B221 mechanical outline data

5.2 NINA-B222 mechanical specification

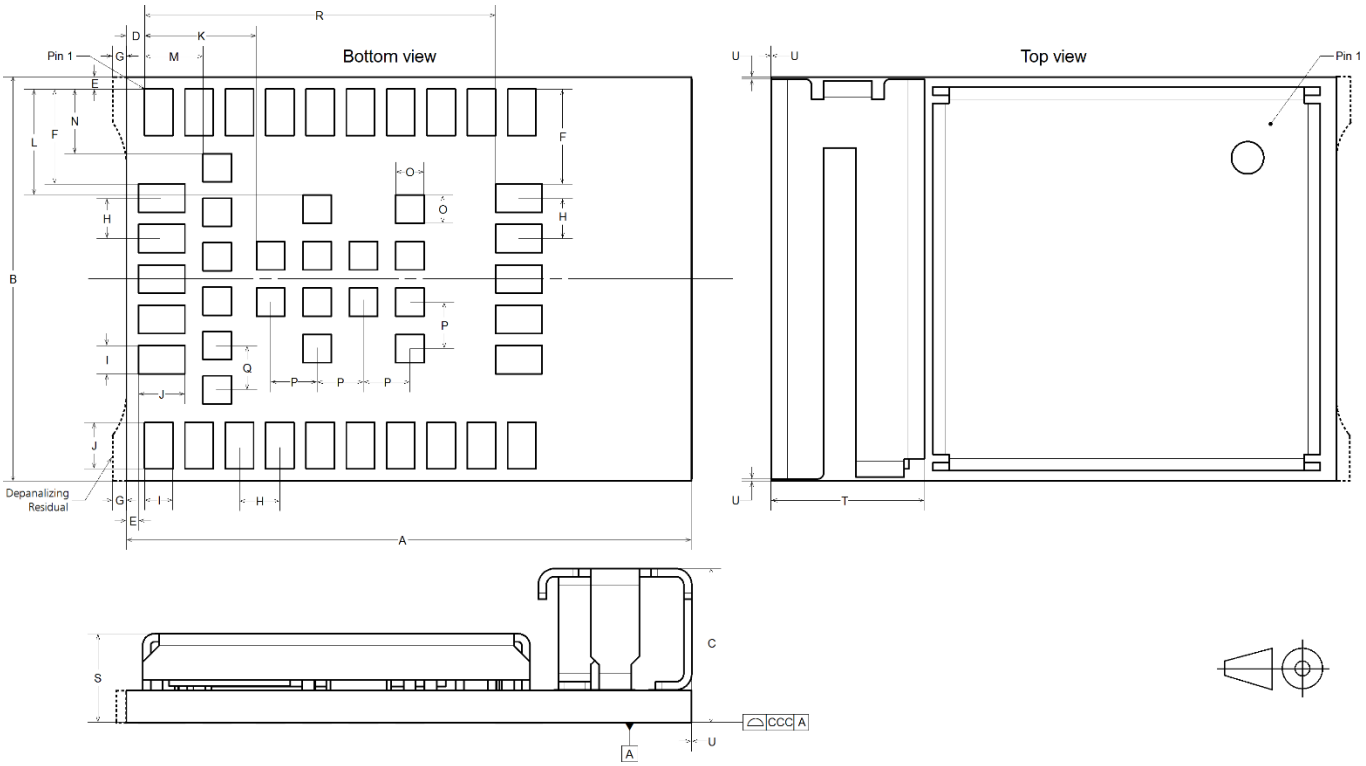

Figure 6: NINA-B222 mechanical outline

Parameter	Description	Typical		Tolerance	
A	Module PCB length [mm]	14.0	(551.2 mil)	+0.20/-0.10	(+7.9/-3.9 mil)
B	Module PCB width [mm]	10.0	(393.7 mil)	+0.20/-0.10	(+7.9/-3.9 mil)
C	Module thickness [mm]	3.8	(149.6 mil)	+0.40/-0.20	(+15.8/-7.9
ccc	Seating plane coplanarity [mm]	0.10	(3.9 mil)	+0.02/-0.10	(+0.8/-3.9 mil)
D	Horizontal edge to lateral pin 1 edge [mm]	0.45	(17.7 mil)	+0.10/-0.10	(+3.9/-3.9 mil)
E	Vertical and horizontal edge to lateral pin 1 edge [mm]	0.30	(11.8 mil)	+0.10/-0.10	(+3.9/-3.9 mil)
F	Vertical pin 1 edge to lateral pin edge [mm]	2.35	(92.5 mil)	+0.05/-0.05	(+2.0/-2.0 mil)
G	Depanalizing residual [mm]	0.10	(3.9 mil)	+0.25/-0.10	(+9.8/-3.9 mil)
H	Lateral and antenna row pin to pin pitch [mm]	1.0	(39.4 mil)	+0.05/-0.05	(+2.0/-2.0 mil)
I	Lateral and antenna row pin width [mm]	0.70	(27.6 mil)	+0.05/-0.05	(+2.0/-2.0 mil)
J	Lateral and antenna row pin height [mm]	1.15	(45.3 mil)	+0.05/-0.05	(+2.0/-2.0 mil)
K	Horizontal pin 1 edge to central pin edge [mm]	2.78	(109.4 mil)	+0.05/-0.05	(+2.0/-2.0 mil)
L	Vertical pin 1 edge to central pin edge [mm]	2.63	(103.5 mil)	+0.05/-0.05	(+2.0/-2.0 mil)
M	Horizontal pin 1 edge to inner row pin edge [mm]	1.45	(57.1 mil)	+0.05/-0.05	(+2.0/-2.0 mil)
N	Vertical pin 1 edge to inner row pin edge [mm]	1.6	(63.0 mil)	+0.05/-0.05	(+2.0/-2.0 mil)
O	Central pin and inner row width and height [mm]	0.70	(27.6 mil)	+0.05/-0.05	(+2.0/-2.0 mil)
P	Central pin to central pin pitch [mm]	1.15	(45.3 mil)	+0.05/-0.05	(+2.0/-2.0 mil)
Q	Inner row pin to pin pitch [mm]	1.1	(43.3 mil)	+0.05/-0.05	(+2.0/-2.0 mil)
R	Horizontal pin 1 edge to antenna row pin edge [mm]	8.7	(342.5 mil)	+0.05/-0.05	(+2.0/-2.0 mil)
S	PCB and shield cover thickness [mm]	2.2	(86.6 mil)	+0.40/-0.20	(+15.8/-7.9
T	Module antenna width [mm]	3.8	(149.6 mil)	+0.20/-0.20	(+7.9/-7.9 mil)
U	Antenna overhang outside module outline on any side	0.0	(0.0 mil)	+0.60	(+23.6 mil)
	Module weight [g]	<1.0			

Table 17: NINA-B222 mechanical outline data

6 Qualification and approvals

6.1 Country approvals

The NINA-B2 module series is certified for use in the following countries/regions:

- Europe (RED)
- Canada (IC)
- USA (FCC)
- Taiwan (NCC)
- Japan (MIC)
- South Korea (KCC)
- Brazil (ANATEL)
- Australia and New Zeeland (ACMA)
- South Africa (ICASA)

See the following sections for more information.

6.2 European Union regulatory compliance

Information about regulatory compliance of the European Union for NINA-B2 series modules is available in the NINA-B2 declaration of conformity [4].

6.2.1 Radio Equipment Directive (RED) 2014/53/EU

NINA-B2 series modules comply with the essential requirements and other relevant provisions of Radio Equipment Directive (RED) 2014/53/EU.

6.2.2 Compliance with the RoHS directive

NINA-B2 series modules comply with the Directive 2011/65/EU (EU RoHS 2) and its amendment Directive (EU) 2015/863 (EU RoHS 3).

6.3 FCC/IC compliance

This device complies with Part 15 of the FCC Rules and with Industry Canada license-exempt RSS standard(s).

⚠ Any changes or modifications NOT explicitly APPROVED by u-blox AG may cause the module to not comply with the FCC rules part 15 thus void the user's authority to operate the equipment.

6.3.1 FCC compliance

NINA-B2 modules are for OEM integrations only. The end product will be professionally installed in such manner that only the authorized antennas can be used.

For NINA-B221, an external antenna connector (U.FL. connector) reference design is available and must be followed to comply with the NINA-B2 FCC/IC modular approval. See the NINA-B2 series system integration manual [1] for detailed information.

6.3.2 FCC statement

This device complies with Part 15 of the FCC Rules. Operation is subject to the following two conditions:

1. This device may not cause harmful interference, and

2. This device must accept any interference received, including interference that may cause undesired operation.

This equipment has been tested and found to comply with the limits for a Class B digital device, pursuant to Part 15 of the FCC Rules. These limits are designed to provide reasonable protection against harmful interference in a residential installation. This equipment generates, uses and can radiate radio frequency energy and, if not installed and used in accordance with the instructions, may cause harmful interference to radio communications. However, there is no guarantee that the interference will not occur in a particular installation. If this equipment does cause harmful interference to radio or television reception, which can be determined by turning the equipment off and on, the user is encouraged to try to correct the interference by one or more of the following measures:

- Reorient or relocate the receiving antenna
- Increase the separation between the equipment and receiver
- Connect the equipment into an outlet on a circuit different from that to which the receiver is connected.
- Consult the dealer or an experienced radio/TV technician for help.

6.3.3 RF-exposure statement

6.3.3.1 IC compliance

This equipment complies with the requirements of IC RSS-102 issue 5 radiation exposure limits set forth for an uncontrolled environment.

To ensure that the output power remains below the SAR evaluation Exemption limits defined in RSS-102 issue 5, customer applications integrating NINA-B221 and NINA-B222 must include a separation distance of at least 30 mm between the user (or bystander) and the antenna (or radiating element).

6.3.3.2 FCC compliance

This device complies with the FCC radiation exposure limits set forth for an uncontrolled environment.

To ensure that the output power remains below the SAR evaluation Exemption limits defined in SAR test exclusion limits in KDB 447498 D01v06, customer applications integrating NINA-B221 and NINA-B222 must include a separation distance of at least 25 mm between the user (or bystander) and the antenna (or radiating element).

6.3.4 End product user manual instructions

6.3.4.1 IC compliance

☞ User manuals for license-exempt radio apparatus shall contain the following text, or an equivalent notice that shall be displayed in a conspicuous location, either in the user manual or on the device, or both:

This device complies with Industry Canada's license-exempt RSSs. Operation is subject to the following two conditions:

1. *This device may not cause interference; and*
2. *This device must accept any interference, including interference that may cause undesired operation of the device.*

Under Industry Canada regulations, this radio transmitter can only operate using an antenna of a type and maximum (or lesser) gain approved for the transmitter by Industry Canada. To reduce potential radio interference to other users, the antenna type and its gain should be chosen in such a way that the equivalent isotropically radiated power (e.i.r.p.) is not more than that is necessary for successful communication.

☞ Le manuel d'utilisation des appareils radio exempts de licence doit contenir l'énoncé qui suit, ou l'équivalent, à un endroit bien en vue dans le manuel d'utilisation ou sur l'appareil, ou encore aux deux endroits.
Le présent appareil est conforme aux CNR d'Industrie Canada applicables aux appareils radio exempts de licence. L'exploitation est autorisée aux deux conditions suivantes:

1. *l'appareil ne doit pas produire de brouillage;*
2. *l'utilisateur de l'appareil doit accepter tout brouillage radioélectrique subi, même si le brouillage est susceptible d'en compromettre le fonctionnement.*

Conformément aux réglementations d'Industry Canada, cet émetteur radio ne peut fonctionner qu'à l'aide d'une antenne dont le type et le gain maximal (ou minimal) ont été approuvés pour cet émetteur par Industry Canada. Pour réduire le risque d'interférences avec d'autres utilisateurs, il faut choisir le type d'antenne et son gain de telle sorte que la puissance isotrope rayonnée équivalente (p.i.r.e) ne soit pas supérieure à celle requise pour obtenir une communication satisfaisante.

6.3.5 End product labeling requirements

6.3.5.1 IC compliance

The host product shall be properly labelled to identify the modules within the host product.

The Innovation, Science and Economic Development Canada certification label of a module shall be clearly visible at all times when installed in the host product; otherwise, the host product must be labelled to display the Innovation, Science and Economic Development Canada certification number for the module, preceded by the word "Contains" or similar wording expressing the same meaning, as shown in Figure 7.

Le produit hôte devra être correctement étiqueté, de façon à permettre l'identification des modules qui s'y trouvent.

L'étiquette d'homologation d'un module d'Innovation, Sciences et Développement économique Canada devra être posée sur le produit hôte à un endroit bien en vue, en tout temps. En l'absence d'étiquette, le produit hôte doit porter une étiquette sur laquelle figure le numéro d'homologation du module d'Innovation, Sciences et Développement économique Canada, précédé du mot « contient », ou d'une formulation similaire allant dans le même sens et qui va comme suit:

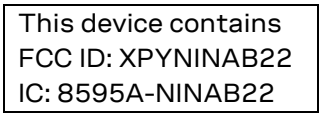

Figure 7 Example of an end product label

6.3.5.2 FCC compliance

For an end product that uses the NINA-B221 or NINA-B222 modules, there must be a label containing, at least, the information shown in Figure 7:

The label must be affixed on an exterior surface of the end product such that it will be visible upon inspection in compliance with the modular approval guidelines developed by the FCC.

☞ In accordance with 47 CFR § 15.19, the end product shall bear the following statement in a conspicuous location on the device:
"This device complies with Part 15 of the FCC Rules. Operation is subject to the following two conditions;

1. this device may not cause harmful interference, and
2. this device must accept any interference received, including interference that may cause undesired operation."

When the device is so small or for such use that it is not practicable to place the statement above on it, the information shall be placed in a prominent location in the instruction manual or pamphlet supplied to the user or, alternatively, shall be placed on the container in which the device is marketed.

In case, where the final product will be installed in locations where the end-user is not able to see the FCC ID and/or this statement, the FCC ID and the statement shall also be included in the end product manual.

Model	FCC ID	IC Certification Number
NINA-B221	XPYNINAB22	8595A-NINAB22
NINA-B222	XPYNINAB22	8595A-NINAB22

Table 18: FCC and IC IDs for NINA-B2 series modules

6.3.6 End product compliance

6.3.6.1 General requirements

- Any changes to hardware, hosts or co-location configuration may require new radiated emission and SAR evaluation and/or testing.
- The regulatory compliance of NINA-B221 and NINA-B222 does not exempt the end product from being evaluated against applicable regulatory demands; for example, FCC Part 15B criteria for unintentional radiators.
- Only authorized antenna(s) may be used.
- Any notification to the end user about how to install or remove the integrated radio module is NOT allowed.

6.3.6.2 Co-location (simultaneous transmission)

If the module is to be co-located with another transmitter, additional measurements for simultaneous transmission are required.

6.4 Japan radio equipment compliance



204-810001

Figure 8: Giteki mark, R and the NINA-B221/ NINA-B222 MIC certification number

For information about compliance of the NINA-B221/ NINA-B222 modules with the Giteki certification, see the NINA-B2 series system integration manual [1].

6.5 NCC Taiwan compliance

6.5.1 Taiwan NCC Warning Statement

- 經型式認證合格之低功率射頻電機，非經許可，公司、商號或使用者均不得擅自變更頻率、 **加大功率或變更原設計之特性及功能。**
- 低功率射頻電機之使用不得影響飛航安全及干擾合法通信；經發現有干擾現象時，應立即停用，並改善至無干擾時方得繼續使用。前項合法通信，指依電信法規定作業之無線電通信。低功率射頻電機須忍受合法通信或工業、科學及醫療用電波輻射性電機設備之干擾。

Statement translation:

- Without permission granted by the NCC, any company, enterprise, or user is not allowed to change frequency, enhance transmitting power or alter original characteristic as well as performance to an approved low power radio-frequency devices.
- The low power radio-frequency devices shall not influence aircraft security and interfere legal communications; If found, the user shall cease operating immediately until no interference is achieved. The said legal communications means radio communications is operated in compliance with the Telecommunications Act. The low power radio-frequency devices must be susceptible with the interference from legal communications or ISM radio wave radiated devices.

6.5.2 NINA-B221 labeling requirements for end product

When a product integrated with a NINA-B221 module is placed on the Taiwan market, the product must be affixed with a label marking as shown below. The label can use wording such as the following:

Contains Transmitter Module

內含發射器模組: CCAJ18LP0B41T0

or any similar wording that expresses the same meaning may be used. The marking must be visible for inspection.

6.5.3 NINA-B222 labeling requirements for end product

When a product integrated with an NINA-B222 module is placed on the Taiwan market, the product must be affixed with a label marking as shown below. The label can use wording such as the following:

Contains Transmitter Module

內含發射器模組: CCAJ18LP0B51T3

or any similar wording that expresses the same meaning may be used. The marking must be visible for inspection.

6.6 KCC South Korea compliance

NINA-B2 series modules are certified by the Korea Communications Commission (KCC).

When a product containing a NINA-B2 module is placed on the South Korean market, the product must be affixed with a label or marking containing the KCC logo and certification number as shown in the following figure. NINA-B221 and NINA-B222 has the same certification number as the NINA-W151 and NINA-W152 modules. This information must also be included in the product user manuals.

R-C-ULX-NINA-W151

The height of the KCC logo must be at least 5 mm.

6.7 Brazil compliance

When a product containing NINA-B221 or NINA-B222 modules is placed on the Brazilian market, the product must be affixed with a label or marking containing the Anatel logo, NINA-B221/NINA-B222 Homologation number: 06870-18-05903 and a statement claiming that the device may not cause harmful interference but must accept it (Resolution No 506).

ANATEL
06870-18-05903

"Este equipamento opera em caráter secundário, isto é, não tem direito a proteção contra interferência prejudicial, mesmo de estações do mesmo tipo, e não pode causar interferência a sistemas operando em caráter primário."

Statement translation:

"This equipment operates on a secondary basis and, consequently, must accept harmful interference, including from stations of the same kind, and may not cause harmful interference to systems operating on a primary basis."

When the device is so small or for such use that it is not practicable to place the statement above on it, the information shall be placed in a prominent location in the instruction manual or pamphlet supplied to the user or, alternatively, shall be placed on the container in which the device is marketed.

In case, where the final product will be installed in locations where the end user is unable to see the Anatel logo, NINA-B221/NINA-B222 Homologation number and/or this statement, the Anatel logo, NINA-B221/NINA-B222 Homologation number, and the statement shall also be included in the end product manual.

6.8 Australia and New Zealand regulatory compliance

The NINA-B221 and NINA-B222 modules are compliant with the standards made by the Australian Communications and Media Authority (ACMA).

The modules are compliant with AS/NZS 4268:2012 standard – Radio equipment and systems – Short range devices – Limits and methods of standard measurement. The test reports of NINA-B221/NINA-B222 modules can be used as part of the product certification and compliance folder. For more information on the test reports, send an email to the support team in your region. See also Contact.

To meet overall Australian and/or New Zealand end product compliance, the integrator must create a compliance folder containing all the relevant compliance test reports such as RF, EMC, electrical safety and DoC (Declaration of Conformity) and so on. It is the responsibility of the integrator to know what is required in the compliance folder for ACMA compliance.

For more information on Australia compliance, refer to the Australian Communications and Media Authority web site http://www.acma.gov.au/.

For more information on New Zealand compliance, refer to the New Zealand Radio Spectrum Management Group web site www.rsm.govt.nz.

6.9 South Africa regulatory compliance

The NINA-B221 and NINA-B222 modules are compliant and certified by the Independent Communications Authority of South Africa (ICASA). End products that are made available for sale or lease or is supplied in any other manner in South Africa shall have a legible label permanently affixed to its exterior surface. The label shall have the ICASA logo and the ICASA issued license number as shown in the figure below. The minimum width and height of the ICASA logo shall be 3 mm. The approval labels must be purchased by the customer's local representative directly from the approval authority ICASA. A sample of a NINA-B221/NINA-B222 ICASA label is included below:



More information on registration as a Responsible Integrator and labeling requirements can be found at the following website:

Independent Communications Authority of South Africa (ICASA) web site - https://www.icasa.org.za

6.10 Safety compliance

In order to fulfill the safety standard EN 60950-1, NINA-B2 series modules must be supplied with a Class-2 Limited Power Source.

6.11 Bluetooth qualification information

End products are required to be qualified and listed for the Bluetooth Special Interest Group (SIG).

Product declarations are submitted through the SIG Bluetooth Launch Studio website.

NINA-B221 and NINA-B222 modules are qualified as a Controller Subsystem in accordance with the Bluetooth 4.2 specification and are registered with the SIG Qualified Design IDs (QDID) shown in Table 19.

To list your product that integrates NINA-B221 and NINA-B222 as an End product (with no additional testing required), combine the pre-qualified Controller Subsystem QDID (107058) with the QDID of the Host Subsystem implemented in the u-connectXpress version used by your application, as shown in Table 19.

Model	Product type	QD ID	Listing date	u-connectXpress version
NINA-B221, NINA-B222	Controller Subsystem	107058	14-Mar-2018	All versions
NINA-B221, NINA-B222	Host Subsystem	110883	30-Apr-2018	1.0.0 to 4.0.0
NINA-B221, NINA-B222	Host Subsystem	166433	25-May-2021	5.0.0 or later

Table 19: NINA-B221/NINA-B222 Bluetooth QDID

7 Antennas

This chapter gives an overview of the different external antennas that can be used together with the module.

⚠ This radio transmitter IC: 8595A-NINAB22 has been approved by Industry Canada to operate with the antenna types listed below with the maximum permissible gain and required antenna impedance for each antenna type indicated. Antenna types not included in this list, having a gain greater than the maximum gain indicated for that type, are strictly prohibited for use with this device.

⚠ Cet émetteur radio IC: 8595A-NINAB22 été approuvé par Industry Canada pour fonctionner avec les types d'antenne énumérés ci-dessous avec le gain maximum autorisé et l'impédance nécessaire pour chaque type d'antenne indiqué. Les types d'antenne ne figurant pas dans cette liste et ayant un gain supérieur au gain maximum indiqué pour ce type-là sont strictement interdits d'utilisation avec cet appareil.

For each antenna, the "Approvals" field defines in which test reports the antenna is included. Definitions of the «Approvals» field are:

- FCC - The antenna is included in the FCC test reports and thus approved for use in countries that accept the FCC radio approvals, primarily US.
- IC - The antenna is included in the IC (Industrie Canada) test reports and thus approved for use in countries that accept the IC radio approvals, primarily Canada.
- RED - The antenna is included in the ETSI test reports and thus approved for use in countries that accept the Radio Equipment Directive, primarily the European countries.
- MIC - The antenna is included in the Japanese government affiliated MIC test reports and thus approved for use in the Japanese market.
- NCC - The antenna is included in the Taiwan NCC test reports and thus approved for use in Taiwan.
- KCC - The antenna is included in the Korea KCC test reports and thus approved for use in Korea.
- ANATEL – The antenna is included in the Brazil ANATEL test reports and thus approved for use in Brazil.
- ACMA – The antenna is included in the Australia and New Zealand test reports and thus approved for use in Australia and New Zealand.
- ICASA – The antenna is included in the South Africa ICASA test reports and thus approved for use in South Africa.

In general, antennas with SMD connection, Reverse Polarity SMA connector or U.FL connector are included in FCC, IC, RED, MIC, NCC, KCC, ANATEL, ACMA and ICASA radio tests. The antennas with SMA connector are included in RED, MIC, NCC, KCC, ANATEL, ACMA and ICASA radio tests but not in the FCC or IC due to FCC/IC regulations.

The external antennas are connected to the board through U.FL connectors. Some antennas are connected directly to the U.FL connector of the board while some are connected using an SMA or reversed polarity SMA connector through a short U.FL to SMA or reversed polarity SMA adapter cable.

7.1 Antenna accessories

Name	U.FL to SMA adapter cable	
Connector	U.FL and SMA jack (outer thread and pin receptacle)	
Impedance	50 Ω	
Minimum cable loss	0.5 dB, The cable loss must be above the minimum cable loss to meet the regulatory requirements. Minimum cable length 100 mm.	
Comment	The SMA connector can be mounted in a panel. See NINA-B2 series system integration manual [1] for information how to integrate the U.FL connector.	
Approval	RED, MIC, NCC, KCC, ANATEL, ACMA and ICASA	

Name	U.FL to Reverse Polarity SMA adapter cable	
Connector	U.FL and Reverse Polarity SMA jack (outer thread and pin)	
Impedance	50 Ω	
Minimum cable loss	0.5 dB, The cable loss must be above the minimum cable loss to meet the regulatory requirements. Minimum cable length 100 mm.	
Comment	The Reverse Polarity SMA connector can be mounted in a panel. See NINA-B2 series system integration manual [1] for information how to integrate the U.FL connector. It is required to followed this reference design to comply with the NINA-B2 FCC/IC modular approvals.	
Approval	FCC, IC, RED, MIC, NCC, KCC, ANATEL, ACMA and ICASA	

7.2 Approved antennas

7.2.1 Single band antennas

NINA-B222		
Manufacturer	Abracon	
Gain	+3 dBi	
Impedance	50 Ω	
Size (HxWxL)	3.0 x 3.8 x 9.9 mm	
Type	PIFA	
Comment	SMD PIFA antenna on NINA-B222. Should not be mounted inside a metal enclosure. See also Internal antenna.	
Approval	FCC, IC, RED, MIC, NCC, KCC, ANATEL, ACMA and ICASA	

GW.26.0111

Manufacturer	Taoglas
Polarization	Vertical
Gain	+2.0 dBi
Impedance	50 Ω
Size	Ø 7.9 x 30.0 mm
Type	Monopole
Connector	SMA (M) .
Comment	To be mounted with the U.FL to SMA adapter cable.
Approval	RED, MIC, NCC, KCC, ANATEL, ACMA and ICASA



ANT-2.4-CW-RH-RPS

Manufacturer	Linx
Polarization	Vertical
Gain	-1.0 dBi
Impedance	50 Ω
Size	Ø 7.4 x 27.0 mm
Type	Monopole
Connector	Reverse Polarity SMA plug (inner thread and pin receptacle).
Comment	To be mounted with the U.FL to Reverse Polarity SMA adapter cable. An SMA version antenna is also available but not recommended for use (ANT-2.4-CW-RH-SMA).
Approval	FCC, IC, RED, MIC, NCC, KCC, ANATEL, ACMA and ICASA



Wi-Fi external antenna, PN PRO-EX-348

Manufacturer	Abracon
Polarization	Vertical
Gain	+3.0 dBi
Impedance	50 Ω
Size	Ø 12.0 x 28.0 mm
Type	Monopole
Connector	Reverse Polarity SMA plug (inner thread and pin receptacle).
Comment	The antenna needs to be surrounded by a metal ground plane for best performance. It is mounted with the U.FL to a Reverse Polarity SMA adapter cable. An SMA antenna version is also available, but is not recommended for use (Ex-IT 2400 SMA 28-001).
Approval	FCC, IC, RED, MIC, NCC, KCC, ANATEL, ACMA and ICASA (certified unde PN Ex-IT 2400 RP-SMA 28-001)



Wi-Fi / Bluetooth external antenna, PN PRO-EX-296

Manufacturer	Abracon
Polarization	Vertical
Gain	+2.0 dBi
Impedance	50 Ω
Size	Ø 12.0 x 28.0 mm
Type	Monopole
Cable length	100 mm
Connector	U.FL. connector
Comment	The antenna needs a metal ground plane surrounding for best performance. It is mounted with the U.FL to Reverse Polarity SMA adapter cable. For information on how to integrate the U.FL connector, see the NINA-B2 series system integration manual [1]. This reference design must be followed to comply with NINA-B2 FCC/IC modular approvals.
Approval	FCC, IC, RED, MIC, NCC, KCC, ANATEL, ACMA and ICASA (certified under the PN Ex-IT 2400 MHF 28)



Wi-Fi / Bluetooth / Bluetooth LE external whip antenna, PN PRO-EX-333

Manufacturer	Abracon
Polarization	Vertical
Gain	+3.0 dBi
Impedance	50 Ω
Size	Ø 10 x 83 mm
Type	Monopole
Connector	Reverse Polarity SMA plug (inner thread and pin receptacle)
Comment	To be mounted with the U.FL to Reverse Polarity SMA adapter cable. An SMA version antenna is also available but not recommended for use (PN PRO-EX-332).
Approval	FCC, IC, RED, MIC, NCC, KCC, ANATEL, ACMA and ICASA (certified under the PN Ex-IT 2400 RP-SMA 70-002)



Wi-Fi / Bluetooth external whip antenna, PN PRO-EX-327

Manufacturer	Abracon
Polarization	Vertical
Gain	+3.0 dBi
Impedance	50 Ω
Size	Ø 9.4 x 70.5 mm
Type	Monopole
Cable length	100 mm
Connector	U.FL. connector
Comment	To be mounted with a U.FL connector. For information on how to integrate the U.FL connector, see the NINA-B2 series system integration manual [1]. This reference design must be followed to comply with NINA-B2 FCC/IC modular approvals.
Approval	FCC, IC, RED, MIC, NCC, KCC, ANATEL, ACMA and ICASA (certified under the PN Ex-IT 2400 MHF 70-001)



Wi-Fi / Bluetooth / Bluetooth LE board antenna, PN PRO-IS-237

Manufacturer	Abracon
Gain	+3.0 dBi
Impedance	50 Ω
Size	27 x 12 mm (triangular)
Type	Patch
Cable length	100 mm
Connector	U.FL. connector
Comment	Should be attached to a plastic enclosure or part for best performance. To be mounted with a U.FL connector. See NINA-B2 series system integration manual [1] for information how to integrate the U.FL connector. This reference design must be followed to comply with NINA-B2 FCC/IC modular approvals.
Approval	FCC, IC, RED, MIC, NCC, KCC, ANATEL, ACMA and ICASA



7.2.2 Dual-band antennas

Wi-Fi / Bluetooth / Bluetooth LE board antenna, PN PRO-IS-299

Manufacturer	Abracon
Gain	+3.0 dBi
Impedance	50 Ω
Size	27 x 12 mm (triangular)
Type	Patch
Cable length	100 mm
Connector	U.FL. connector
Comment	Should be attached to a plastic enclosure or part for best performance. Dual-band (2.4 GHz / 5 GHz) antenna to be mounted with a U.FL connector. For information on how to integrate the U.FL connector, see the NINA-B2 series system integration manual [1]. This reference design must be followed to comply with NINA-B2 FCC/IC modular approvals.
Approval	FCC, IC, RED, MIC, NCC, KCC, ANATEL, ACMA and ICASA



Wi-Fi / Bluetooth / Bluetooth LE board antenna, PN PRO-IS-432

Manufacturer	Abracon
Gain	+3.0 dBi
Impedance	50 Ω
Size	24 x 22 x 1 mm with mounting hole
Type	Patch
Cable length	100 mm
Connector	U.FL. connector
Comment	Should be attached to a plastic enclosure or part for best performance. Dual-band (2.4 GHz / 5 GHz) antenna to be mounted with a U.FL connector. For information on how to integrate the U.FL connector, see the NINA-B2 series system integration manual [1]. This reference design must be followed to comply with NINA-B2 FCC/IC modular approvals.
Approval	FCC, IC, RED, MIC, NCC, KCC, ANATEL, ACMA and ICASA

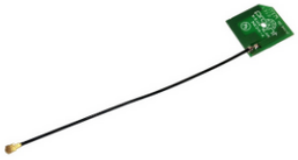

Wi-Fi / Bluetooth exernal whip antenna, PN PRO-EX-286	
Manufacturer	Abracon
Type	½ wave dipole dual-band antenna
Polarization	Vertical
Gain	+3 dBi
Impedance	50 Ω
Size	107 mm (Straight)
Type	Monopole
Connector	Reverse Polarity SMA plug (inner thread and pin receptacle)
Comment	To be mounted with the U.FL to Reverse Polarity SMA adapter cable.
Approval	FCC, IC, RED, MIC, NCC, KCC, ANATEL, ACMA and ICASA (certified under the PN Ex-IT WLAN RPSMA)



8 Product handling

8.1 Packaging

⚠ NINA-B2 series modules are currently in development status. See also Applicability. Consequently, the information in this section is only applicable after the module has been fully tested and approved in the Initial Production stage.

8.1.1 Reels

NINA-B2 series modules are delivered as hermetically sealed, reeled tapes to enable efficient production, production lot set-up and tear-down. For more information about packaging, see also the Packaging information reference [2].

NINA-B2 modules are deliverable in quantities of 500 pieces on a reel. The reel types for NINA-B2 modules are shown in Table 20. For more information about the reel different reel types, see also the Packaging information reference [2].

Model	Reel type
NINA-B221	B
NINA-B222	A

Table 20: Reel types for the different NINA-B2 series models

8.1.2 Tapes

Figure 9 and Figure 10 shows the position and orientation of NINA-B2 modules as they are delivered on tape. The dimensions of the tapes are specified in Figure 11 and Figure 12.

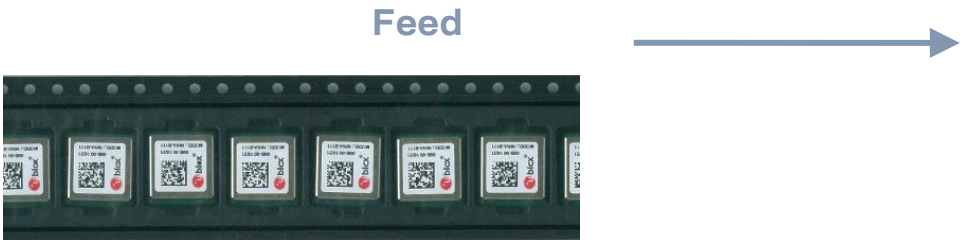

Figure 9: Orientation of NINA-B221 module on tape



Figure 10: Orientation of NINA-B222 module on tape

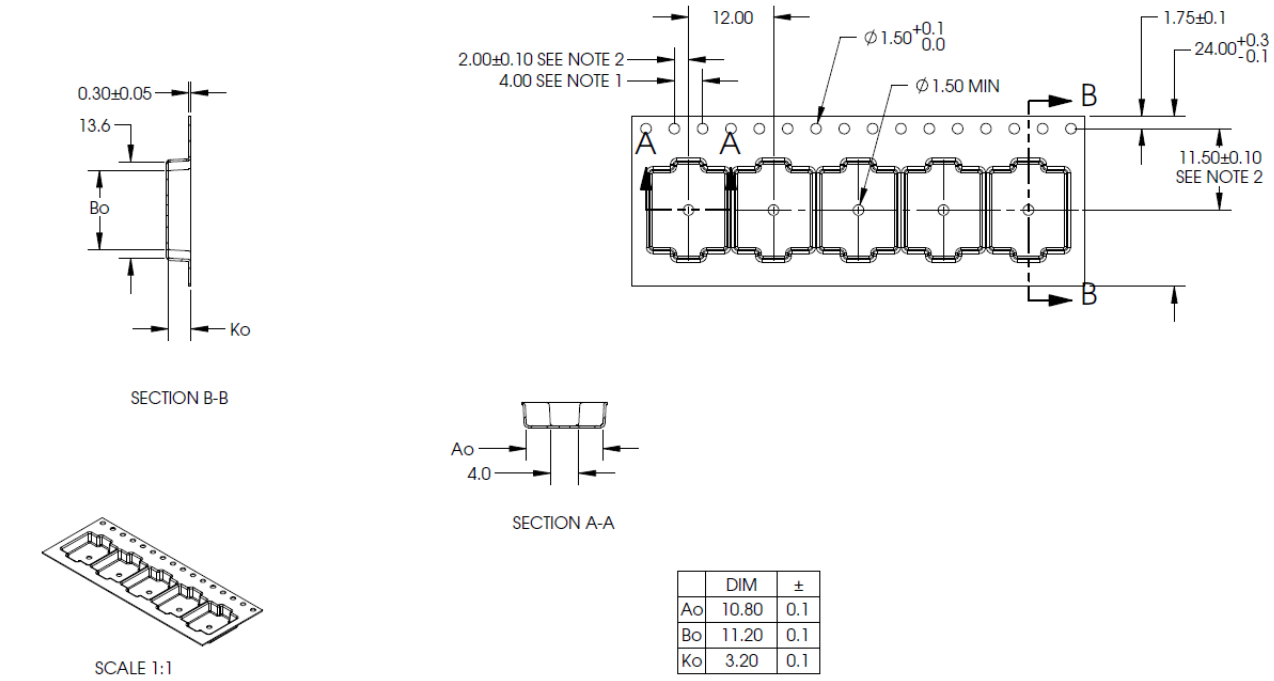

	DIM	±
Ao	10.80	0.1
Bo	11.20	0.1
Ko	3.20	0.1

NOTES:
1. 10 SPROCKET HOLE PITCH CUMULATIVE TOLERANCE ±0.2
2. POCKET POSITION RELATIVE TO SPROCKET HOLE MEASURED AS TRUE POSITION OF POCKET, NOT POCKET HOLE.
3. Ao AND Bo ARE MEASURED ON A PLANE AT A DISTANCE "R" ABOVE THE BOTTOM OF THE POCKET.

Figure 11: NINA-B221 tape dimension

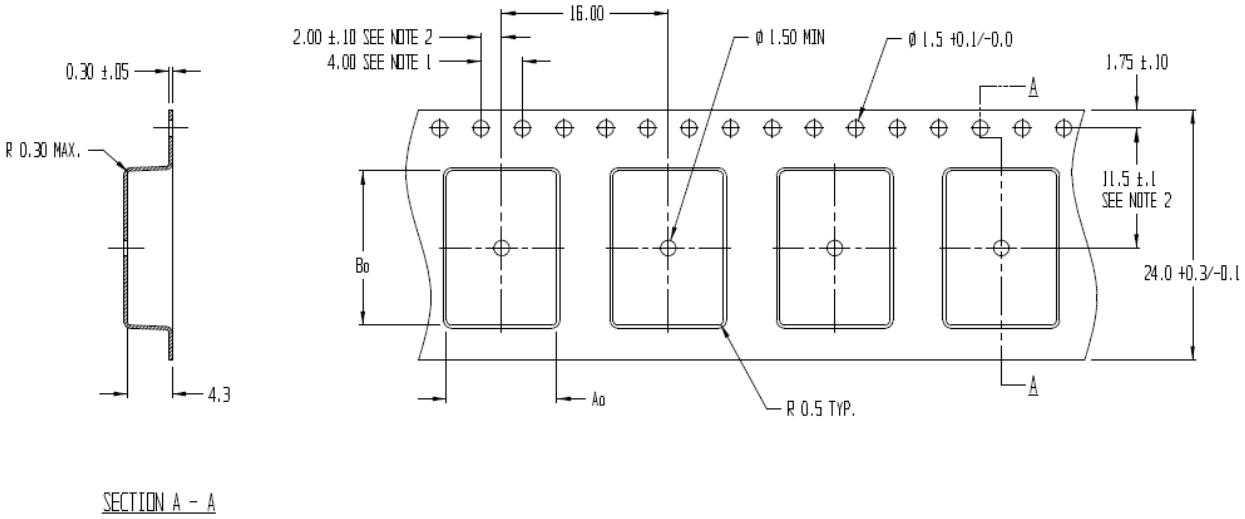

Ao = 10.6
Bo = 14.8
Ko = 4.3

NOTES:
1. 10 SPROCKET HOLE PITCH CUMULATIVE TOLERANCE ±0.2
2. POCKET POSITION RELATIVE TO SPROCKET HOLE MEASURED AS TRUE POSITION OF POCKET, NOT POCKET HOLE
3. Ao AND Bo ARE CALCULATED ON A PLANE AT A DISTANCE "R" ABOVE THE BOTTOM OF THE POCKET.

Figure 12: NINA-B222 tape dimension

8.2 Moisture sensitivity levels

⚠ NINA-B2 series modules are rated as MSL Level 4 devices in accordance with the IPC/JEDEC J-STD-020 standard. For detailed information, see the moisture sensitive warning label on the MBB (Moisture Barrier Bag).

After opening the dry pack, the modules must be mounted within 72 hours in factory conditions of maximum 30 °C/60%RH or must be stored at less than 10%RH. The modules require baking if the humidity indicator card shows more than 10% when read at 23±5 °C or if the conditions mentioned above are not met. For information about the bake procedure, see also the J-STD-033B standard.

For more information regarding MSL (Moisture Sensitivity Level), labeling, and storage, see also the Packaging information guide [2].

8.3 Reflow soldering

NINA-B2 series modules are approved for two-time reflow processes.

⚠ Reflow soldering profiles must be selected in accordance with u-blox soldering recommendations described in the NINA-B2 series system integration manual [1]. Failure to observe these recommendations can result in severe damage to the product.

8.4 ESD precautions

⚠ NINA-B2 series modules are Electrostatic Sensitive Devices that demand the observance of special handling precautions against static damage. Failure to observe these precautions can result in severe damage to the product. See also Maximum ESD ratings.

Proper ESD handling and packaging procedures must be applied throughout the processing, handling, and operation of any application that incorporates the NINA-B2 series module. ESD precautions are particularly relevant when handling the application board on which the module is mounted.

For further information about the handling of NINA-B2 series modules, see also the NINA-B2 system integration manual [1].

9 Labeling and ordering information

9.1 Product labeling

The (7.5 x 7.5 mm) labels on the NINA-B2 series modules include important product information.

Figure 13 shows the label applied to NINA-B40 series modules. Each of the given label references are described in Table 21.



Figure 13: Location of product type number on the NINA-B2 series module label

Reference	Description
1	Date of unit production encoded YY/WW (year, week)
2	Major and minor product version information
3	Product model name (NINA-B221 or NINA-B222)
4	Data Matrix with unique serial number comprising 19 alphanumeric symbols: - The first 3 symbols are used for production tracking and are an abbreviated representation of the Type number that is unique to each module variant. - The following 12 symbols represent the unique hexadecimal Bluetooth address of the module AABBCCDDEEFF, and The last 4 symbols represent the hardware and firmware version encoded HHFF. See also MAC addresses.
5	u-blox logo. The red dot also indicates pin 1.

Table 21: NINA-B2 series label description

9.1.1 Product identifiers

Table 22 describes the three product identifiers, namely the Type number, Model name and Ordering code.

Format	Description	Nomenclature
Model name	Describes the form factor, platform technology and platform variant. Used mostly in product documentation like this data sheet, the model name represents the most common identity for all u-blox products	PPPP-TGVV
Ordering code	Comprises the model name – with additional identifiers to describe the major product version and quality grade	PPPP-TGVV-TTQ
Type number	Comprises the model name and ordering code – with additional identifiers to describe minor product versions.	PPPP -TGVV-TTQ-XX

Table 22: Product code formats

9.1.2 Identification codes

Table 23 describes the individual identification codes represented in each product identifier.

Code	Meaning	Example
PPPP	Form factor	NINA
TG	Platform (Technology and Generation) T – Dominant technology, For example, W: Wi-Fi, B: Bluetooth G - Generation	B2: Bluetooth Generation 2
VV	Variant based on the same platform; range [00…99]	21: u-connectXpress software product with antenna pin
TT	Major Product Version	00: first revision
Q	Quality grade A: Automotive B: Professional C: Standard	B: professional grade
XX	Minor product version (not relevant for certification)	Default value is 00

Table 23: Part identification code

9.2 Ordering information

Ordering code	Product
NINA-B221-00B	Bluetooth dual-mode module with antenna pin. With u-connectXpress software including secure boot. Using ESP32-D0WDQ6.
NINA-B221-02B	Bluetooth dual-mode module with antenna pin. With u-connectXpress software including secure boot. Using ESP32-D0WDQ6-V3.
NINA-B221-03B	Bluetooth dual-mode module with antenna pin. With u-connectXpress software including secure boot. Using ESP32-D0WDQ6-V3.
NINA-B222-00B	Bluetooth dual-mode module with internal onboard antenna. With u-connectXpress software including secure boot. Using ESP32-D0WDQ6.
NINA-B222-02B	Bluetooth dual-mode module with internal onboard antenna. With u-connectXpress software including secure boot. Using ESP32-D0WDQ6-V3.
NINA-B222-03B	Bluetooth dual-mode module with internal onboard antenna. With u-connectXpress software including secure boot. Using ESP32-D0WDQ6-V3.

Table 24: Product ordering codes

Appendix

A Glossary

Abbreviation	Definition
ADC	Analog to Digital Converter
AFA	Automatic Frequency Adaption
BR	Basic Rate
BDR	Basic Data Rate
BPF	Band Pass Filter
BT	Bluetooth
CTS	Clear To Send
DAC	Digital to Analog Converter
DC	Direct Current
DSR	Data Set Ready
DTR	Data Terminal Ready
EDR	Enhanced Data Rate
ESD	Electro Static Discharge
FCC	Federal Communications Commission
GND	Ground
GPIO	General Purpose Input/Output
IC	Industry Canada
IEEE	Institute of Electrical and Electronics Engineers
IoT	Internet of Things
LPO	Low Power Oscillator
MCU	Micro Controller Unit
MDIO	Management Data Input / Output
MII	Media-Independent Interface
MISO	Master In Slave Out (data output from slave)
MOSI	Master Out Slave In (data output from master)
MRD	Market Requirement Document
MSD	Moisture Sensitive Device
N/A	Not Applicable
PCN	Product Change Notification
PIFA	Planar Inverted F Antenna
PD	Pull-Down
PU	Pull-Up
QSPI	Quad Serial Peripheral Interface
RTS	Request To Send
RXD	Receive Data
SDIO	Secure Digital Input Output
SDK	Software Development Kit
SPI	Serial Peripheral Interface
TXD	Transmit Data
UART	Universal Asynchronous Receiver/Transmitter

Table 25: Explanation of the abbreviations and terms used

Related documents

[1] NINA-B2 series system integration manual, UBX-18011096
[2] Product packaging guide, UBX-14001652
[3] u-connectXpress AT commands manual, UBX-14044127
[4] NINA-B2 declaration of conformity, UBX-18007187
[5] NINA-B2 series product summary, UBX-17062096
[6] u-connectXpress SPI peripheral protocol specification, UBX-20028725
[7] u-connectXpress software user guide, UBX-16024251
[8] s-center user guide, UBX-16012261

For product change notifications and regular updates of u-blox documentation, register on our website, www.u-blox.com.

Revision history

Revision	Date	Name	Comments
R01	16-Mar-2018	mwej, kgom	Initial release.
R02	6-Jul-2018	mwej, kgom	Updated the software version to version 1.0.0 and modified the corresponding content status to Advance Information. Modified the values for Bluetooth output power (chapter 4). Removed "pending" status for the following country approvals in section 6 - USA (FCC), Canada (IC) and Japan (MIC).
R03	14-Dec-2018	mwej	Updated label description (Table 21). Removed LPO functionality. Updated RF characteristics and current consumption in chapter 4.
R04	28-Jan-2019	mwej	Modified the product status to Initial Production. Updated description of usage of the DSR signal in section 2.6.4.
R05	13-Aug-2019	fbro, mwej	Updated pinout due to typo regarding switch 1 and 2. Added certification information for Brazil, Australia, New Zealand and South Africa (sections 6.7-6.9). Updated information about approved antennas (chapter 7). Updated with RoHS 3 compliance (section 6.2.2). Updated voltage supply range (section 4.2.2) and absolute maximum module supply voltage and maximum RF input ratings (section 4.1). Updated maximum ESD ratings (section 4.1.1). Corrected information about restoring UART setting to default settings (section 2.6.3). Updated Bluetooth output power and sensitivity (sections 1.5, 4.2.6 and 4.2.7). Corrected information about blue LED signal in connected mode (Table 4).
R06	27-Jan-2020	mlju	Updated type numbers in the second table on page 2 with NINA-B22x-00B-01.
R07	18-Sep-2020	hekf, ajoh	Added antenna radiation patterns in section 4.2.8 and GPIO drive strength in section 4.2.4. Changed boot strap information in section 2.3 and ESD ratings in section 4.1.1. Added new NINA-B221 and B222 product variants. Updated Figure 3 and Table 5 to reflect the revised number of available GPIOs. Changed software name to u-connectXpress, and added SPI support in sections 2.7.2, 2.4 and 3.1. Added descriptions of the new power modes in section 2.2. Updated current consumption data in electrical specifications, section 4.2.5. Added GPI and SPI functionality to pins in chapter 3.1.
R08	18-May-2021	mape, hekf	Updated Bluetooth terminology. Updated the Pin assignment. Removed current peak values in Current consumption. Added version NINA-B22x-03B in Applicability and Ordering information. Added information in Module reset and Low Power Clock. Added drive capability information in Drive capability. Revised Labeling and ordering information.

Revision	Date	Name	Comments
R09	15-Nov-2021	hekf	Updated names for ProAnt Ex-It series antennas and FlatWhip EOL in Approved antennas. Added new products NINA-B221/B222-03B-01 and removed the NINA-B221/B222-00B-01, NINA-B221/B222-02B-00 and NINA-B221/B222-03B-00 in Document information. Removed ambiguous description of operating condition ranges in Electrical specifications. Updated information describing Moisture sensitivity levels, Reflow soldering, and ESD precautions. Revised Maximum ESD ratings.
R10	16-Aug-22	fkru	Updated listing details in Bluetooth qualification information. Corrected appropriate bake mount time to 72 hours in Moisture sensitivity levels. Updated contact information. Revised Bluetooth qualification information. Revised former Proant antenna references with updated part numbers from Abracon and removed obsolete antennas (EOL) from the list of approved antennas.

Contact

For further support and contact information, visit us at www.u-blox.com/support.