P1AT-SAMF-6G2W-20

RF Attenuator, SMA Male to SMA Female, 6 GHz, 20 dB, 2 Watts

Product Features

P1AT-SAMF-6G2W-20 is a 50 Ohm coaxial attenuator, SMA female to SMA male, 20 dB.

Frequency is DC to 6 GHz with a max VSWR 1.20. Attenuation accuracy is +/- 0.7 dB.

Input Power rating 2W avg at 25 deg C. The attenuator body is passivated stainless steel.



Electrical Specification: $T_{Ambient}$ = 25° C

Parameter	Frequency Range	Units	Min	Typical	Max	Notes
Frequency Range		GHz	DC		6.0	

Mechanical And Environmental Specifications:

Parameter	Description	Notes
Connector 1	SMA Male	
Connector 2	SMA Female	
RoHS Compliance	Yes	

Drawing

P1dB, Inc. 188 Martinvale Lane, San Jose, CA 95119 +1(408)613-4857

sales@p1dB.com

P1AT-SAMF-6G2W-20

RF Attenuator, SMA Male to SMA Female, 6 GHz, 20 dB, 2 Watts

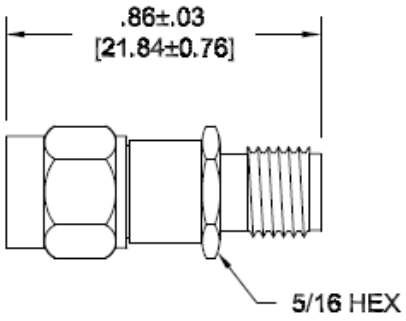

Product Notes

Temp range: -20 to +85 deg C.

P1dB, Inc. 188 Martinvale Lane, San Jose, CA 95119 +1(408)613-4857

sales@p1dB.com