

PDQ24496

4-Port MIMO Directional Antenna 2400-2500 MHz/4900-5950 MHz

The Laird Connectivity patent-pending PDQ24496 antenna is a four-port dual-band, dual polarized directional panel antenna for use in 802.11n MIMO indoor and outdoor applications. The antenna is an excellent choice for high density Wi-Fi applications where adjacent interference is of concern. The dual-band frequency coverage means that a single type of antenna can be deployed with any MIMO radio in the 2400-2500 MHz and 4900-5950 MHz bands.
In addition, the uniform and symmetrical radiation patterns will provide a high-level signal density into engineered coverage areas.

FEATURES AND BENEFITS

- Ultra-thin, compact ASA UV stable white housing
- Four radiating elements optimized for indoor and outdoor 802.11n or 802.11ac MIMO applications
- Articulating arm mount can be anchored directly to a vertical surface or mast mounted and oriented for optimal signal radiation
- Horizontal and vertical polarization for multipath mitigation
- IP67-rated and RoHS-compliant

APPLICATIONS

- High density Wi-Fi
- Outdoor stadiums, arenas, and convention centers
- Hotels and casinos
- Airport, bus, and train terminals
- Retail stores and indoor pedestrian malls
- Libraries and museums

ELECTRICAL SPECIFICATION		
Model Name	PDQ24496	
Number of Ports	4	
Operating Frequency (MHz)	2400-2500	4900-5950
VSWR – Avg	1.5:1	1.3:1
VSWR – Max	<2.0:1	<2.0:1
Peak Gain – Avg. (dBi)	6.4	4.8
Peak Gain – Max. (dBi)	6.8	6.5
Max. Gain ± 30° above Horizon (dBi)	-	3.2
Port-to-Port Isolation – Avg. (dB)	43	41
Port-to-Port Isolation – Max. (dB)	>30	>30
Nominal Impedance (Ohms)	50	
Max Power - Ambient 25°C (W)	1	
Power Handling (W)		
Polarization	Vertical (2 ports), Horizontal (2 ports)	

ELECTRICAL SPECIFICATION		
Vertical Plane 3 dB Beamwidth – V-pol	62°	58°
Vertical Plane 3 dB Beamwidth – H-pol	71°	56°
Horizontal Plane 3 dB Beamwidth – V-pol	68°	58°
Horizontal Plane 3 dB Beamwidth – H-pol	63°	57°
Front-to-Back Ratio (dB)	>15	

MECHANICAL SPECIFICATION	
Dimensions – mm (inches)	254 x 254 x 41 (10 x 10 x 1.6)
Weight – kg (lbs.) (without mount)	1.14 (2.50)
Mounting	Articulating mount, mast or flush
Cable Type	Low temperature plenum-rated cable
Radome Material	Polycarbonate, UL94-V0, UV stable white

ENVIRONMENTAL SPECIFICATION	
Operating Environment (Indoor or Outdoor)	Indoor and outdoor
Operating Temperature – °C (°F)	-40 to +70°C (-40 to +158°F)
Storage Temperature – °C (°F)	-40 to +85°C (-40 to +185°F)
Wind Operational – km/hr (mph)	160 (100)
Wind Survival – km/hr (mph)	200 (125)
Ingress Protection Rating	IP67
Material Substance Compliance	RoHS

CONFIGURATION

PART NUMBER	CABLE LENGTH	CONNECTOR
PDQ24496-FNF	N/A	Fixed Type N Female
PDQ24496-91NF	91.0 cm (3.0 ft.) – 4x	4x Type N Female
PDQ24496-91NM	91.0 cm (3.0 ft.) – 4x	4x Type N Male

MOUNTING OPTIONS

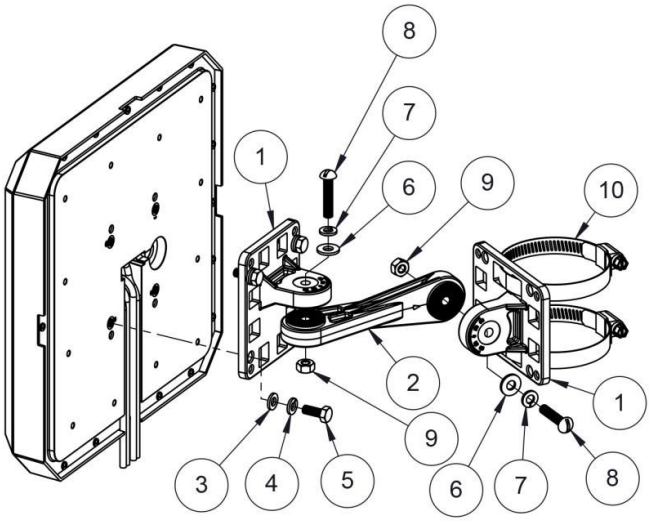

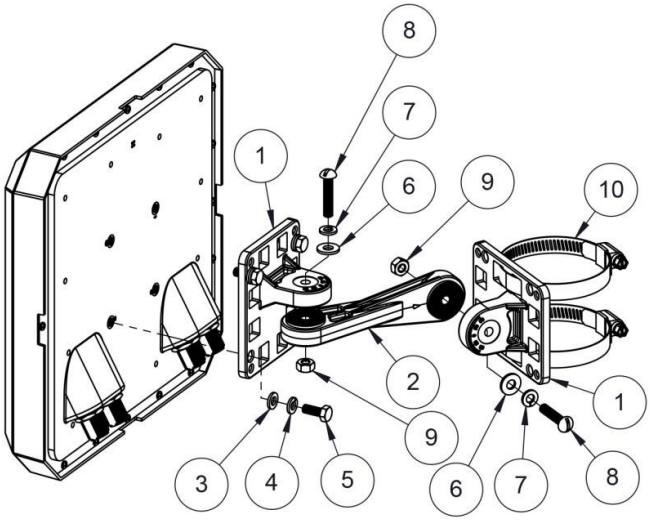

KEY	DESCRIPTION	QTY.
1	Mount flange	2
2	Mount arm	1
3	M6 flat washer	4
4	M6 lock washer	4
5	Bolt M6 x 16 mm	4
6	¼" flat washer	2
7	¼" lock washer	2
8	Screw ¼" x 1.25"	2
9	¼" nut	2
10	Clamp	2

RADIATION PATTERNS

2400 MHz

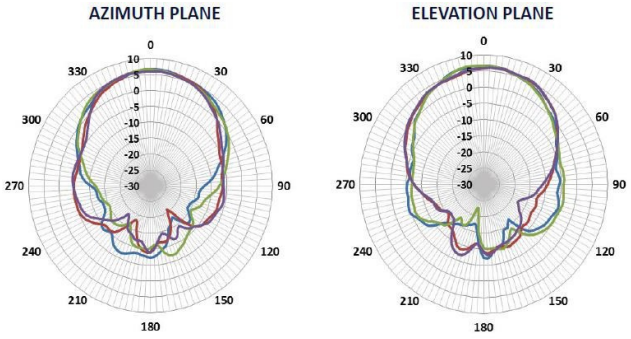

2450 MHz

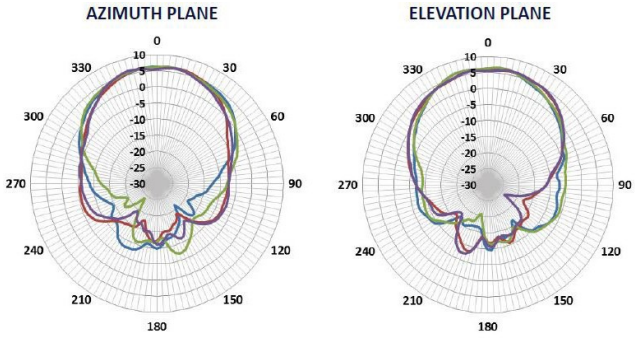

2500 MHz

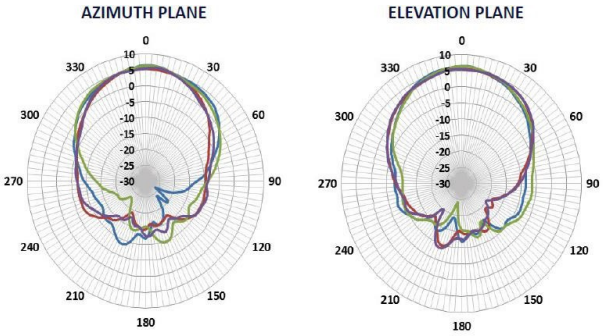

4900 MHz

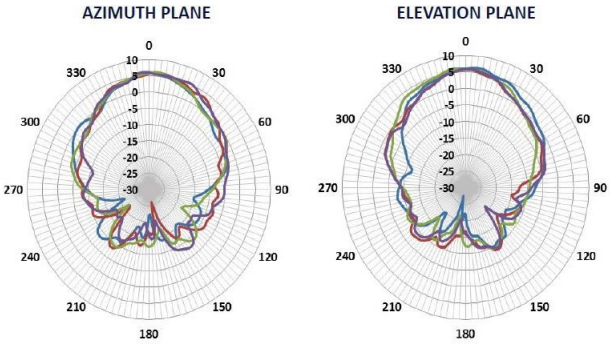

5400 MHz

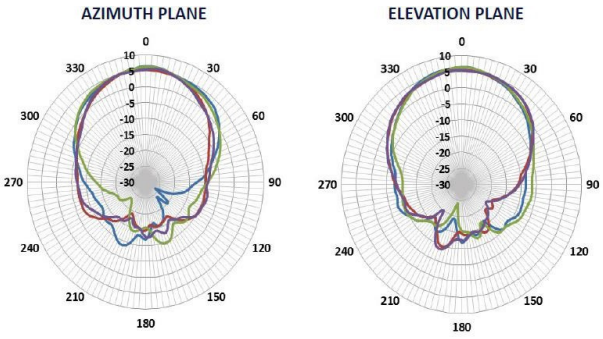

5950 MHz

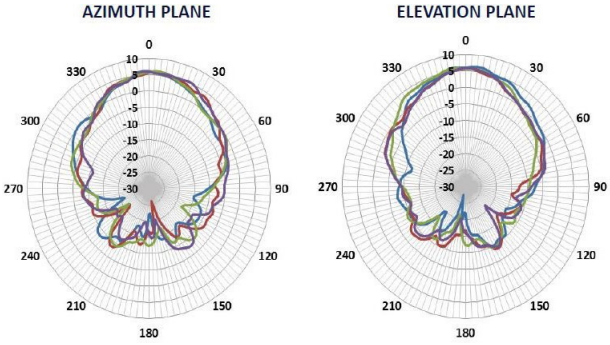

te.com

TE Connectivity, TE Connectivity (logo) and Every Connection Counts are trademarks. All other logos, products and/or company names referred to herein might be trademarks of their respective owners.

The information given herein, including drawings, illustrations and schematics which are intended for illustration purposes only, is believed to be reliable. However,
TE Connectivity makes no warranties as to its accuracy or completeness and disclaims any liability in connection with its use.
TE Connectivity's obligations shall only be as set forth in TE Connectivity's Standard Terms and Conditions of Sale for this product and in no case will TE Connectivity be liable for any incidental, indirect or consequential damages arising out of the sale, resale, use or misuse of the product. Users of TE Connectivity products should make their own evaluation to determine the suitability of each such product for the specific application.

TE warrants to the original end user customer of its products that its products are free from defects in material and workmanship. Subject to conditions and limitations TE will, at its option, either repair or replace any part of its products that prove defective because of improper workmanship or materials. This limited warranty is in force for the useful lifetime of the original end product into which the TE product is installed. Useful lifetime of the original end product may vary but is not to exceed five (5) years from the original date of the end product purchase.

©2021 TE Connectivity. All Rights Reserved.

12/21 Original

TE TECHNICAL SUPPORT CENTER

USA:	+1 (800) 522-6752
Canada:	+1 (905) 475-6222
Mexico:	+52 (0) 55-1106-0800
Latin/S. America:	+54 (0) 11-4733-2200
Germany:	+49 (0) 6251-133-1999
UK:	+44 (0) 800-267666
France:	+33 (0) 1-3420-8686
Netherlands:	+31 (0) 73-6246-999
China:	+86 (0) 400-820-6015

Laird™ External Antennas is now part of TE connectivity