RFX Group
Incorporating Laptech Precision

PLL Part No: PT1300-1005-GPS

Issue 2; 5th May 2022

Features

- Temperature stability locked to ± 0.001 ppb long term
- Low phase noise
- Frequency range 10MHz
- Low pre-aged options available
- Small surface mount package
- The flexible nature of the design means that variations to suit almost any application can be developed to meet individual customer requirements



Specifications

- Temperature stability unlocked: ±20ppb over (–40 to 70)°C
- Output: Sinewave 7dBm
- Voltage: 5.0V
- Warm Up Current: 540mA
- Quiescent current: 270mA

Phase Noise (typical)

- FO_0+10Hz -120 dBc/Hz
- FO_0+100Hz -140 dBc/Hz
- FO_0+1KHz -155 dBc/Hz
- FO_0+10KHz -165 dBc/Hz
- FO_0+100KHz -168 dBc/Hz

Voltage / Load change

- ±5% supply voltage change: ±2ppb
- ±10% load change: ±5ppb

Ageing:

Based on 10MHz unit after 30 days continuous operation:

- Per day: ±0.1ppb max.
- Per year: ±50ppb max.
- Warm up time: 5 minutes to within 1 ppm

1pps accuracy:

- ±50 ns

Antenna reference (If used)

- 3V

Environmental

- Electrostatic-Sensitive Device (ESD)
- Storage Temperature Range: (-40 to 125)°C
- Mechanical shock: MIL standard 202F, method 213, condition J
- Thermal shock: MIL standard 202F, method 107, condition A

Dimensions (mm)

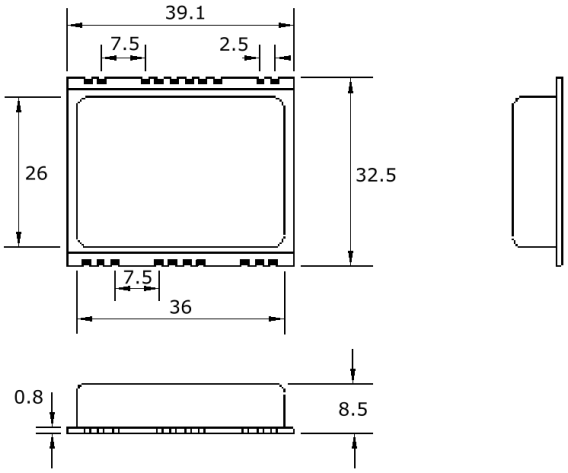

#1 ground	#20 Vcc
#2 antenna	#19 1 pps
#3 ground	#18 N/C
#4 antenna bias	#17 N/C
#5 d.c bias out	#16 N/C
#6 ground	#15 N/C
#7 NMEA (CMOS RS232)	#14 N/C
#8 ground	#13 N/C
#9 RF out	#12 lock 2
#10 ground	#11 lock 1

Lock Status

Lock 1	Lock 2	
low	low	no status
high/low	low/high	power up test OK
high	low	GPS satellite detect
low	high	GPS Lock
high	high	Full operational lock

- Vibration: MIL standard 202F, method 204, condition B
- Solderability: 5 seconds maximum at 230°C
- 3 seconds maximum at 350°C

Compliance

- RoHS Status (2011/65/EU) - Compliant
- REACH Status - Compliant

Packaging

- Pack Style: Bulk

Ordering Information

- PLL Part No.: PT1300-1005-GPS

Test Circuit - Sinewave

