Polypropylene Pulse/High Frequency Capacitors

R77, Double Metallized Polypropylene Film, Radial, AC Applications

Overview

The R77 Series is constructed of polypropylene film and double metallized polyester film as electrodes with radial leads of tinned wire. The radial leads are electrically welded to the metal layer on the ends of the capacitor winding. The capacitor is encapsulated in a self-extinguishing solvent resistant plastic case with thermosetting resin material meeting the UL 94 V–0 requirements. Four different winding constructions are used depending on voltage parameters. Please see the Performance Characteristics for more information.

Applications

Typical applications include electronic lighting such as automotive headlamps and ballasts, as well as pulse applications with high AC voltage and high current.

Not suitable for across-the-line application (see Suppressor Capacitors).

Benefits

- Voltage range: 250 – 900 VAC
- Capacitance range: 0.001 – 0.1 µF
- Lead Spacing: 10 – 27.5 mm
- Capacitance tolerance: ±2.5%, ±5%, ±10%
- Climatic category: 55/105/56 IEC 60068–1
- Operating temperature range of –55˚C to +105˚C
- RoHS compliance and lead-free terminations
- Tape & Reel packaging in accordance with IEC 60286–2
- Self-healing

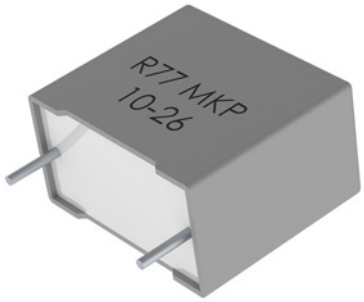

Part Number System

R77	L	I	2270	AA	00	H
Series	Rated Voltage (VAC)	Lead Spacing (mm)	Capacitance Code (pF)	Packaging	Internal Use	Capacitance Tolerance
Double Metallized Polypropylene	L = 250 N = 400 5 = 500 7 = 700 9 = 900	I = 15 N = 22.5 R = 27.5	The last three digits represent significant figures. The first digit specifies the total number of zeros to be added.	See Ordering Options Table	00	H = 2.5% J = ±5% K = ±10%

© KEMET Electronics Corporation • KEMET Tower • One East Broward Boulevard
Fort Lauderdale, FL 33301 USA • 954-766-2800 • www.kemet.com

Ordering Options Table

Lead Spacing Nominal (mm)	Type of Leads and Packaging	Lead Length (mm)	Lead and Packaging Code
15 22.5	**Standard Lead and Packaging Options**		
	Bulk (Bag) – Short Leads	4 +2/−0	AA
	Ammo Pack	H_0 = 18.5±0.5	DQ
	Other Lead and Packaging Options		
	Tape & Reel (Standard Reel Ø 355 mm)	H_0 = 18.5±0.5	GY
	Tape & Reel (Large Reel Ø 500 mm)	H_0 = 18.5±0.5	CK
	Bulk (Bag) – Short Leads	3.5 +0.5/−0	JB
	Bulk (Bag) – Short Leads	4.0 +0.5/−0	JE
	Bulk (Bag) – Short Leads	3.2 +0.3/−0.2	JH
	Bulk (Bag) – Long Leads	18±1	JM
	Bulk (Bag) – Long Leads	30 +5/−0	40
	Bulk (Bag) – Long Leads	25 +2/−1	50
27.5	**Standard Lead and Packaging Options**		
	Bulk (Tray) – Short Leads	4 +2/−0	AA
	Other Lead and Packaging Options		
	Tape & Reel (Standard Reel Ø 355 mm)	H_0 = 18.5±0.5	GY
	Tape & Reel (Large Reel Ø 500 mm)	H_0 = 18.5±0.5	CK[1]
	Bulk (Tray) – Short Leads	3.5 +0.5/−0	JB
	Bulk (Tray) – Short Leads	4.0 +0.5/−0	JE
	Bulk (Tray) – Short Leads	3.2 +0.3/−0.2	JH
	Bulk (Tray) – Long Leads	18±1	JM
	Bulk (Tray) – Long Leads	30 +5/−0	40
	Bulk (Tray) – Long Leads	25 +2/−1	50

[1] = *Not for all sizes, see "Packaging Quantities" table.*

Dimensions – Millimeters

Loose

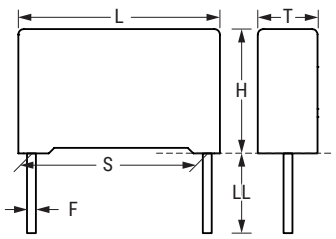

Taped

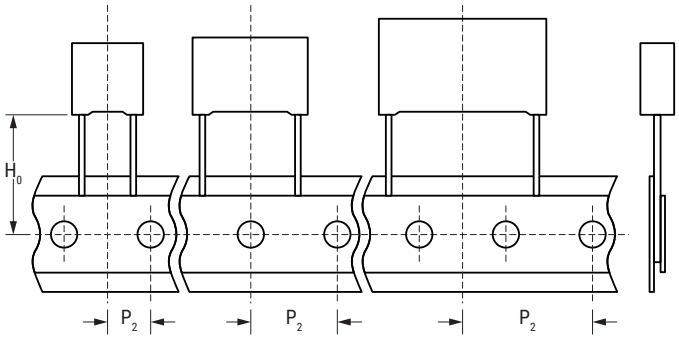

S		T		H		L		F	
Nominal	Tolerance	Nominal	Tolerance	Nominal	Tolerance	Nominal	Tolerance	Nominal	Tolerance
15.0	±0.4	5.0	+0.2/−0.5	11.0	+0.1/−0.5	18.0	+0.3/−0.5	0.8	±0.05
15.0	±0.4	6.0	+0.2/−0.5	12.0	+0.1/−0.5	18.0	+0.3/−0.5	0.8	±0.05
15.0	±0.4	7.5	+0.2/−0.5	13.5	+0.1/−0.5	18.0	+0.5/−0.5	0.8	±0.05
15.0	±0.4	8.5	+0.2/−0.5	14.5	+0.1/−0.5	18.0	+0.5/−0.5	0.8	±0.05
15.0	±0.4	10.0	+0.2/−0.5	16.0	+0.1/−0.5	18.0	+0.5/−0.5	0.8	±0.05
22.5	±0.4	6.0	+0.2/−0.5	15.0	+0.1/−0.5	26.5	+0.3/−0.5	0.8	±0.05
22.5	±0.4	7.0	+0.2/−0.5	16.0	+0.1/−0.5	26.5	+0.3/−0.5	0.8	±0.05
22.5	±0.4	8.5	+0.2/−0.5	17.0	+0.1/−0.5	26.5	+0.3/−0.5	0.8	±0.05
22.5	±0.4	10.0	+0.2/−0.5	18.5	+0.1/−0.5	26.5	+0.3/−0.5	0.8	±0.05
22.5	±0.4	11.0	+0.2/−0.5	20.0	+0.1/−0.5	26.5	+0.3/−0.5	0.8	±0.05
27.5	±0.4	11.0	+0.2/−0.7	20.0	+0.1/−0.7	32.0	+0.3/−0.7	0.8	±0.05
27.5	±0.4	13.0	+0.2/−0.7	22.0	+0.1/−0.7	32.0	+0.3/−0.7	0.8	±0.05

Note: See Ordering Options Table for lead length (LL/Ho) options.

Performance Characteristics

Dielectric	Polypropylene film					
Plates	Double sided metallized polyester film					
Winding	Non-inductive type					
Leads	Tinned wire					
Protection	Plastic case, thermosetting resin filled. Box material is solvent resistant and flame retardant according to UL94.					
Related Documents	IEC 60384–16, IEC 60384–17					
Sections	1	2			3	4
Voltage Range (VDC)	630	800	1,000	1,300	1,600	2,000
Voltage Range (VAC)	250	300	400	500	700	900
Capacitance Range (µF)	0.027 – 0.1	0.01 – 0.1	0.0056 – 0.01	0.001 – 0.1	0.001 – 0.027	0.001 – 0.018
Capacitance Values	E12 series (IEC 60063) measured at 1 kHz and +20 ±1°C					
Capacitance Tolerance	±2.5%, ±5%, ±10%					
Operating Temperature Range	–55°C to +105°C					
Rated Temperature T_R	+85°C for V_R (DC) +105°C for V_R (AC)					
Voltage Derating	Above +85°C DC voltage derating is 1.25%/°C					
Climatic Category	55/105/56 IEC 60068–1					
Storage Conditions	Storage time: ≤ 24 months from the date marked on the label package					
	Average relative humidity per year ≤ 70%					
	RH ≤ 85% for 30 days randomly distributed throughout the year					
	Dew is absent					
	Temperature: –40 to 80°C (see "Maximum Humidity in Storage Conditions" graph above)					
Test Voltage	1.6 x V_R VDC for 2 seconds (between terminations) at +25°C ±5°C					
Capacitance Drift	Maximum 0.5% after a 2 year storage period at a temperature of +10°C to +40°C and a relative humidity of 40% to 60%					
Maximum Pulse Steepness	dV/dt according to Table 1. For working voltages lower than rated voltage ($V < V_R$), the specified dV/dt can be multiplied by the factor V_R/V.					
Temperature Coefficient	–(200 ±100) ppm/°C at 1 kHz					
Self-Inductance L (Lead Length ~ 2 mm)	Lead Spacing (mm)	15			22.5	27.5
	L (nH) ≈	10			16	18
Dissipation Factor tanδ	Maximum Values at 25°C ±5°C					
	Frequency	All Capacitance Values				
	10 kHz	0.06%				
	100 kHz	0.10%				

Performance Characteristics cont.

Insulation Resistance	Measured at +25°C, 100 VDC 60 seconds
	Minimum Values Between Terminals
	All Capacitance Values
	≥ 100,000 MΩ (≥ 500,000 MΩ)*

** Typical value*

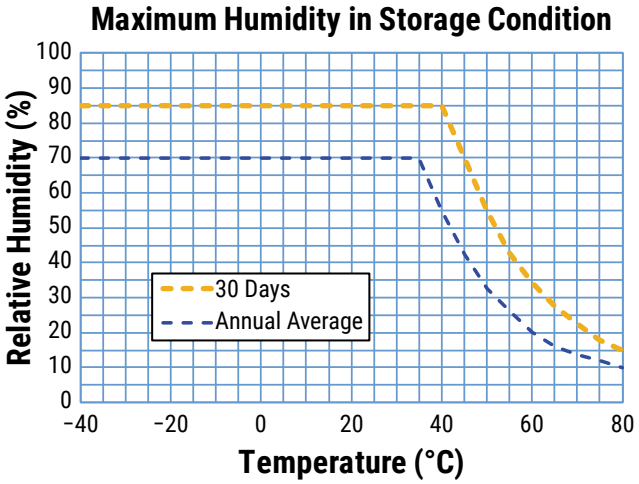

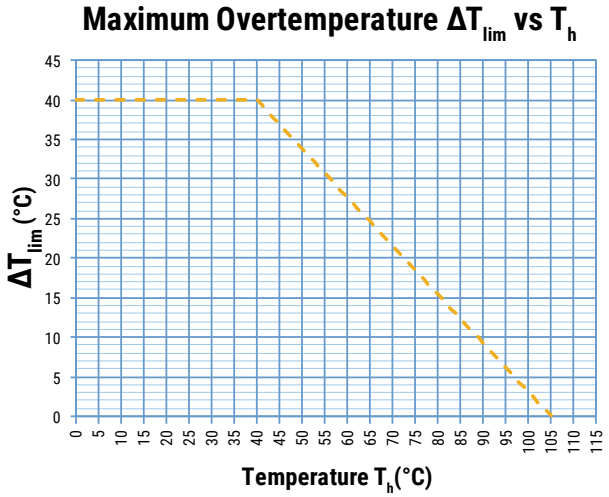

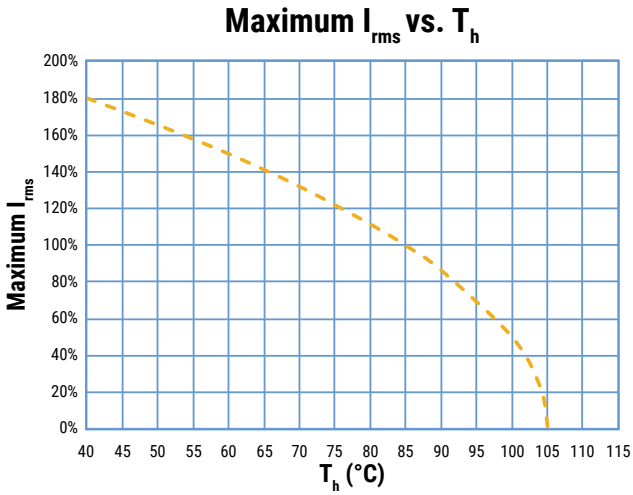

T_h is the maximum ambient temperature surrounding the capacitor or hottest contact point (e.g. tracks), whichever is higher, in the worst operation conditions in °C.

Maximum Voltage (V_{rms}) vs. Frequency (Sinusoidal Waveform/Th ≤ 85°C)

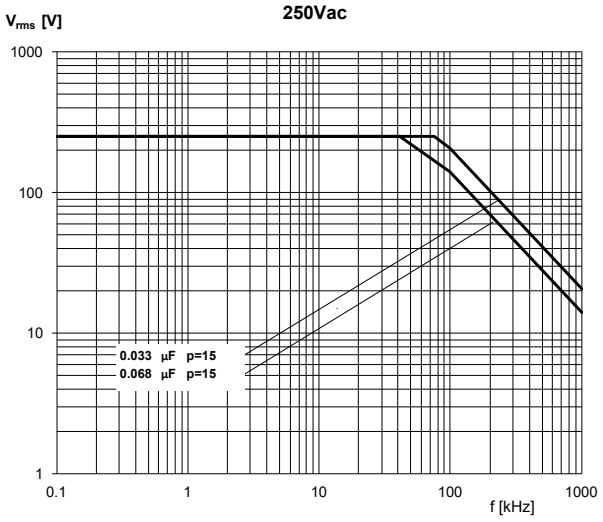

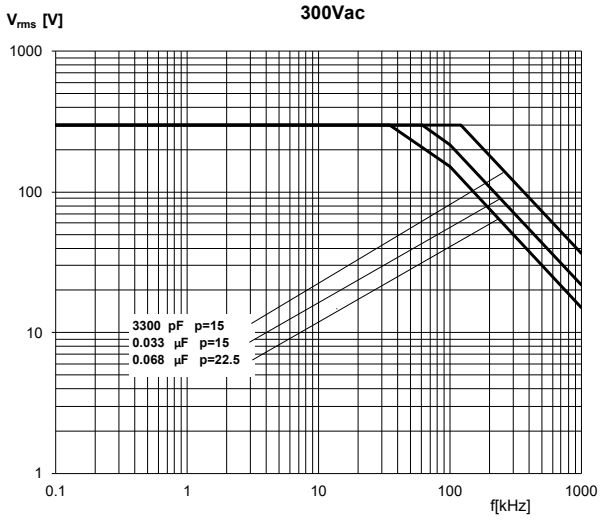

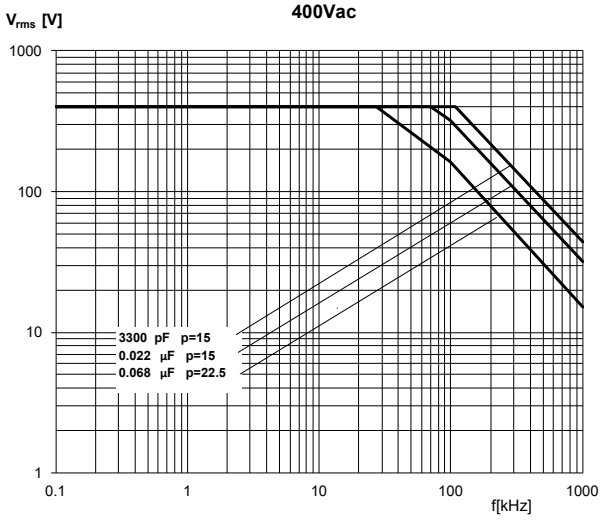

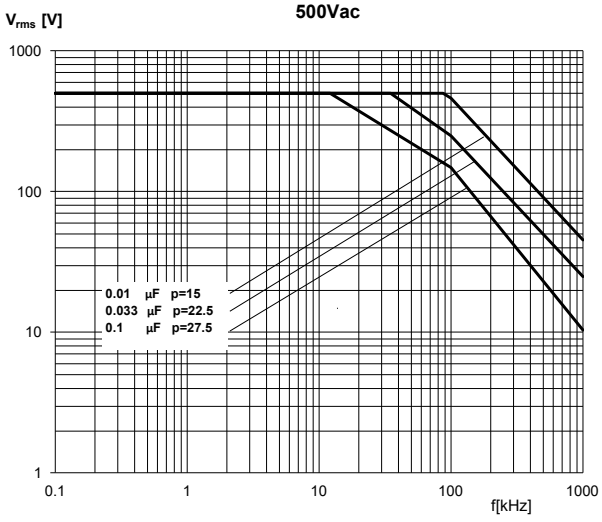

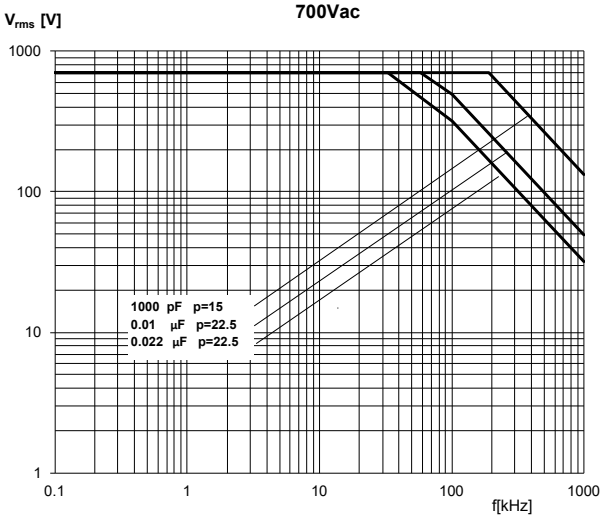

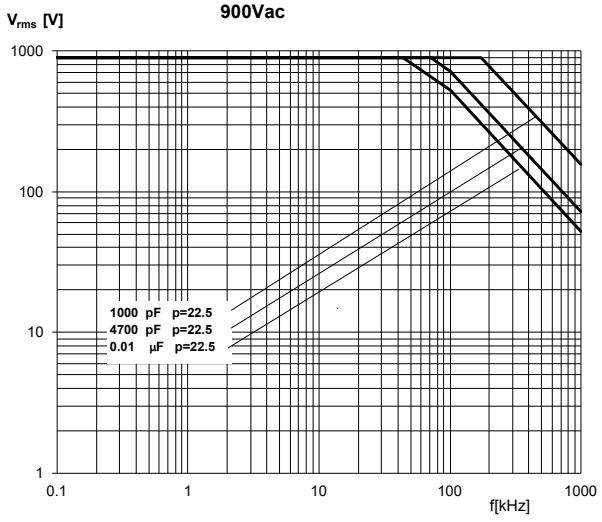

Maximum Current (I_{rms}) vs. Frequency (Sinusoidal Waveform/Th ≤ 85°C)

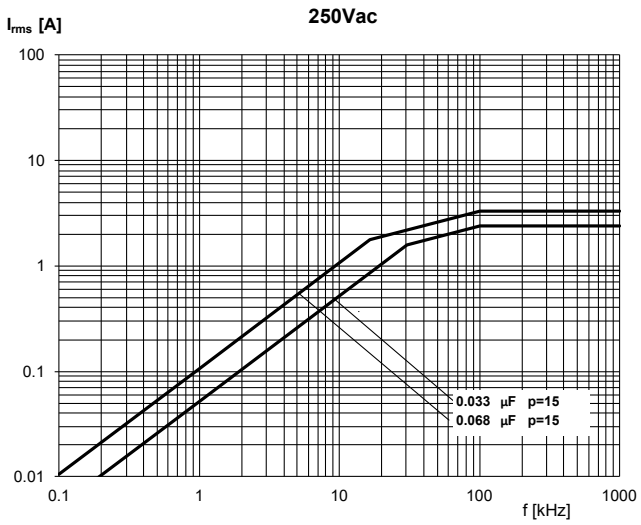

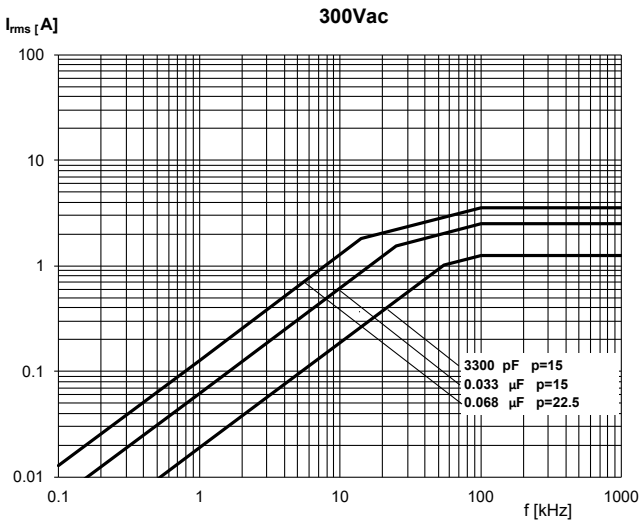

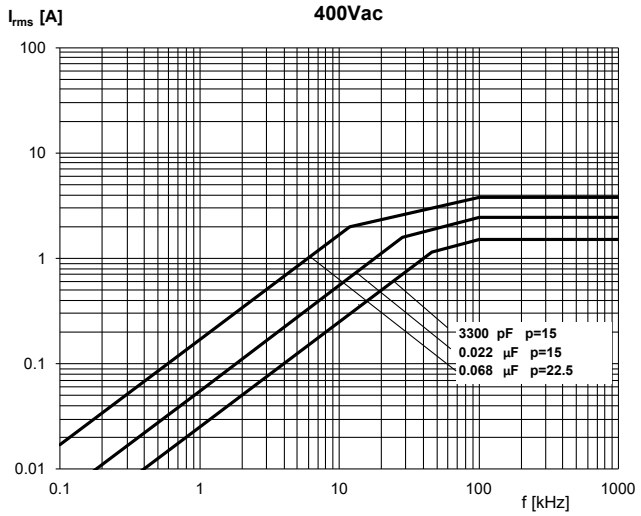

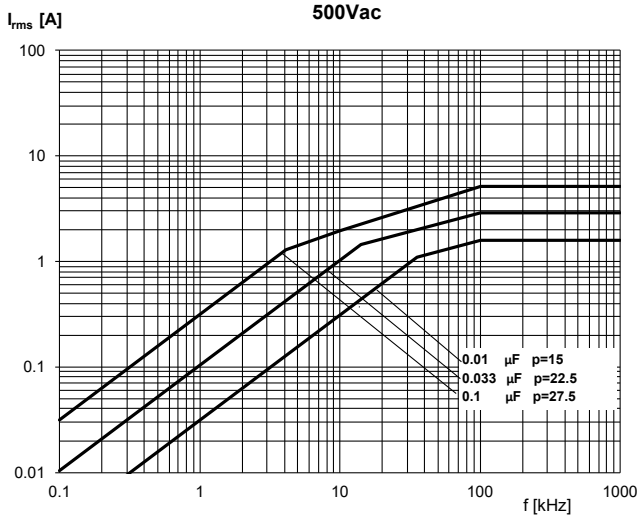

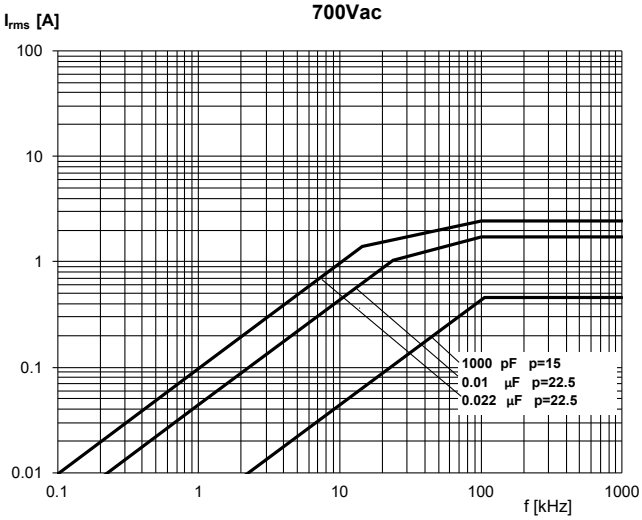

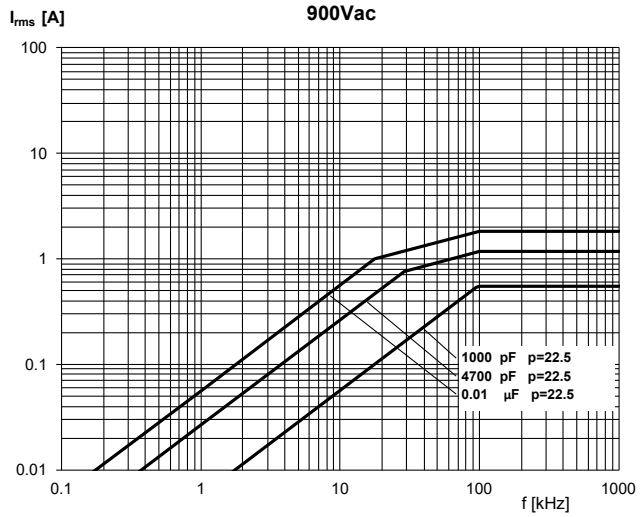

Environmental Test Data

Damp Heat, Steady State Test	Test Conditions:		Performances
	Temperature: Relative humidity (RH): Test duration:	+40°C ± 2°C 93% ± 2% 56 days	|Δ C/C| ≤ 2%, Δ tanδ ≤ 0.001 at 1 kHz IR after test ≥ 50% of initial limit
Endurance Test	**Test Conditions**		**Performances**
	Temperature: Voltage applied: Test duration:	+105°C ±2°C 1.25 x V_R (AC) at 50 Hz 2,000 hours	|Δ C/C| ≤ 2%, Δ tanδ ≤ 0.001 at 10 kHz IR after test ≥ 50% of initial limit
Resistance to Soldering Heat Test	**Test Conditions**		**Performances**
	Solder bath temperature: Dipping time (with heat screen):	260°C ±5°C 10 seconds ±1 second	|Δ C/C| ≤ 1%, Δ tanδ ≤ 0.001 at 1 kHz IR after test ≥ initial limit

Environmental Compliance

All KEMET pulse capacitors are RoHS Compliant.



Table 1 – Ratings & Part Number Reference

VAC	VDC	Capacitance Value (µF)	Dimensions in mm			Lead Spacing (S)	dV/dt (V/µs)	Max K_0 (V^2/µs)	New KEMET Part Number	Legacy Part Number
			T	H	L					
250	630	0.027	6.0	12.0	18.0	15.0	900	1,134,000	77LI2270(1)00(2)	R77LI2270(1)00(2)
250	630	0.033	6.0	12.0	18.0	15.0	900	1,134,000	77LI2330(1)00(2)	R77LI2330(1)00(2)
250	630	0.039	6.0	12.0	18.0	15.0	900	1,134,000	77LI2390(1)00(2)	R77LI2390(1)00(2)
250	630	0.047	7.5	13.5	18.0	15.0	900	1,134,000	77LI2470(1)00(2)	R77LI2470(1)00(2)
250	630	0.056	7.5	13.5	18.0	15.0	900	1,134,000	77LI2560(1)00(2)	R77LI2560(1)00(2)
250	630	0.068	8.5	14.5	18.0	15.0	900	1,134,000	77LI2680(1)00(2)	R77LI2680(1)00(2)
250	630	0.082	10.0	16.0	18.0	15.0	900	1,134,000	77LI2820(1)00(2)	R77LI2820(1)00(2)
250	630	0.10	10.0	16.0	18.0	15.0	900	1,134,000	77LI3100(1)00(2)	R77LI3100(1)00(2)
300	800	0.010	5.0	11.0	18.0	15.0	2,500	4,000,000	773I2100(1)00(2)	R773I2100(1)00(2)
300	800	0.012	5.0	11.0	18.0	15.0	2,500	4,000,000	773I2120(1)00(2)	R773I2120(1)00(2)
300	800	0.015	5.0	11.0	18.0	15.0	2,500	4,000,000	773I2150(1)00(2)	R773I2150(1)00(2)
300	800	0.018	5.0	11.0	18.0	15.0	2,500	4,000,000	773I2180(1)00(2)	R773I2180(1)00(2)
300	800	0.022	6.0	12.0	18.0	15.0	2,500	4,000,000	773I2220(1)00(2)	R773I2220(1)00(2)
300	800	0.027	6.0	12.0	18.0	15.0	2,500	4,000,000	773I2270(1)00(2)	R773I2270(1)00(2)
300	800	0.033	7.5	13.5	18.0	15.0	2,500	4,000,000	773I2330(1)00(2)	R773I2330(1)00(2)
300	800	0.039	7.5	13.5	18.0	15.0	2,500	4,000,000	773I2390(1)00(2)	R773I2390(1)00(2)
300	800	0.047	8.5	14.5	18.0	15.0	2,500	4,000,000	773I2470(1)00(2)	R773I2470(1)00(2)
300	800	0.056	10.0	16.0	18.0	15.0	2,500	4,000,000	773I2560(1)00(2)	R773I2560(1)00(2)
300	800	0.068	10.0	16.0	18.0	15.0	2,500	4,000,000	773I2680(1)00(2)	R773I2680(1)00(2)
300	800	0.056	6.0	15.0	26.5	22.5	1,500	2,400,000	773N2560(1)00(2)	R773N2560(1)00(2)
300	800	0.068	7.0	16.0	26.5	22.5	1,500	2,400,000	773N2680(1)00(2)	R773N2680(1)00(2)
300	800	0.082	7.0	16.0	26.5	22.5	1,500	2,400,000	773N2820(1)00(2)	R773N2820(1)00(2)
300	800	0.10	8.5	17.0	26.5	22.5	1,500	2,400,000	773N3100(1)00(2)	R773N3100(1)00(2)
400	1,000	0.0056	5.0	11.0	18.0	15.0	3,300	6,600,000	77NI1560(1)00(2)	R77NI1560(1)00(2)
400	1,000	0.0068	5.0	11.0	18.0	15.0	3,300	6,600,000	77NI1680(1)00(2)	R77NI1680(1)00(2)
400	1,000	0.0082	5.0	11.0	18.0	15.0	3,300	6,600,000	77NI1820(1)00(2)	R77NI1820(1)00(2)
400	1,000	0.010	6.0	12.0	18.0	15.0	3,300	6,600,000	77NI2100(1)00(2)	R77NI2100(1)00(2)
400	1,000	0.012	6.0	12.0	18.0	15.0	3,300	6,600,000	77NI2120(1)00(2)	R77NI2120(1)00(2)
400	1,000	0.015	7.5	13.5	18.0	15.0	3,300	6,600,000	77NI2150(1)00(2)	R77NI2150(1)00(2)
400	1,000	0.018	7.5	13.5	18.0	15.0	3,300	6,600,000	77NI2180(1)00(2)	R77NI2180(1)00(2)
400	1,000	0.022	8.5	14.5	18.0	15.0	3,300	6,600,000	77NI2220(1)00(2)	R77NI2220(1)00(2)
400	1,000	0.027	10.0	16.0	18.0	15.0	3,300	6,600,000	77NI2270(1)00(2)	R77NI2270(1)00(2)
400	1,000	0.033	10.0	16.0	18.0	15.0	3,300	6,600,000	77NI2330(1)00(2)	R77NI2330(1)00(2)
400	1,000	0.027	6.0	15.0	26.5	22.5	2,100	4,200,000	77NN2270(1)00(2)	R77NN2270(1)00(2)
400	1,000	0.033	7.0	16.0	26.5	22.5	2,100	4,200,000	77NN2330(1)00(2)	R77NN2330(1)00(2)
400	1,000	0.039	7.0	16.0	26.5	22.5	2,100	4,200,000	77NN2390(1)00(2)	R77NN2390(1)00(2)
400	1,000	0.047	8.5	17.0	26.5	22.5	2,100	4,200,000	77NN2470(1)00(2)	R77NN2470(1)00(2)
400	1,000	0.056	8.5	17.0	26.5	22.5	2,100	4,200,000	77NN2560(1)00(2)	R77NN2560(1)00(2)
400	1,000	0.068	10.0	18.5	26.5	22.5	2,100	4,200,000	77NN2680(1)00(2)	R77NN2680(1)00(2)
400	1,000	0.082	10.0	18.5	26.5	22.5	2,100	4,200,000	77NN2820(1)00(2)	R77NN2820(1)00(2)
400	1,000	0.10	11.0	20.0	26.5	22.5	2,100	4,200,000	77NN3100(1)00(2)	R77NN3100(1)00(2)
500	1,300	0.0010	5.0	11.0	18.0	15.0	4,500	11,700,000	775I1100(1)00(2)	R775I1100(1)00(2)
500	1,300	0.0012	5.0	11.0	18.0	15.0	4,500	11,700,000	775I1120(1)00(2)	R775I1120(1)00(2)
500	1,300	0.0015	5.0	11.0	18.0	15.0	4,500	11,700,000	775I1150(1)00(2)	R775I1150(1)00(2)
500	1,300	0.0018	5.0	11.0	18.0	15.0	4,500	11,700,000	775I1180(1)00(2)	R775I1180(1)00(2)
500	1,300	0.0022	5.0	11.0	18.0	15.0	4,500	11,700,000	775I1220(1)00(2)	R775I1220(1)00(2)
500	1,300	0.0027	5.0	11.0	18.0	15.0	4,500	11,700,000	775I1270(1)00(2)	R775I1270(1)00(2)
500	1,300	0.0033	5.0	11.0	18.0	15.0	4,500	11,700,000	775I1330(1)00(2)	R775I1330(1)00(2)
500	1,300	0.0039	5.0	11.0	18.0	15.0	4,500	11,700,000	775I1390(1)00(2)	R775I1390(1)00(2)
500	1,300	0.0047	5.0	11.0	18.0	15.0	4,500	11,700,000	775I1470(1)00(2)	R775I1470(1)00(2)
500	1,300	0.0056	5.0	11.0	18.0	15.0	4,500	11,700,000	775I1560(1)00(2)	R775I1560(1)00(2)
500	1,300	0.0068	6.0	12.0	18.0	15.0	4,500	11,700,000	775I1680(1)00(2)	R775I1680(1)00(2)
500	1,300	0.0082	6.0	12.0	18.0	15.0	4,500	11,700,000	775I1820(1)00(2)	R775I1820(1)00(2)
500	1,300	0.010	7.5	13.5	18.0	15.0	4,500	11,700,000	775I2100(1)00(2)	R775I2100(1)00(2)
500	1,300	0.012	7.5	13.5	18.0	15.0	4,500	11,700,000	775I2120(1)00(2)	R775I2120(1)00(2)
500	1,300	0.015	8.5	14.5	18.0	15.0	4,500	11,700,000	775I2150(1)00(2)	R775I2150(1)00(2)
500	1,300	0.018	10.0	16.0	18.0	15.0	4,500	11,700,000	775I2180(1)00(2)	R775I2180(1)00(2)
500	1,300	0.022	10.0	16.0	18.0	15.0	4,500	11,700,000	775I2220(1)00(2)	R775I2220(1)00(2)
VAC	**VDC**	**Capacitance Value (µF)**	**T (mm)**	**H (mm)**	**L (mm)**	**Lead Spacing (S)**	**dV/dt (V/µs)**	**Max K_0 (V^2/µs)**	**New KEMET Part Number**	**Legacy Part Number**

(1) Insert lead and packaging code. See Ordering Options Table for available options.
(2) H = 2.5%, J = 5%, K = 10%.

Table 1 – Ratings & Part Number Reference cont.

VAC	VDC	Capacitance Value (µF)	Dimensions in mm			Lead Spacing (S)	dV/dt (V/µs)	Max K_0 (V^2/µs)	New KEMET Part Number	Legacy Part Number
			T	H	L					
500	1,300	0.018	6.0	15.0	26.5	22.5	2,500	6,500,000	775N2180(1)00(2)	R775N2180(1)00(2)
500	1,300	0.022	7.0	16.0	26.5	22.5	2,500	6,500,000	775N2220(1)00(2)	R775N2220(1)00(2)
500	1,300	0.027	7.0	16.0	26.5	22.5	2,500	6,500,000	775N2270(1)00(2)	R775N2270(1)00(2)
500	1,300	0.033	8.5	17.0	26.5	22.5	2,500	6,500,000	775N2330(1)00(2)	R775N2330(1)00(2)
500	1,300	0.039	10.0	18.5	26.5	22.5	2,500	6,500,000	775N2390(1)00(2)	R775N2390(1)00(2)
500	1,300	0.047	10.0	18.5	26.5	22.5	2,500	6,500,000	775N2470(1)00(2)	R775N2470(1)00(2)
500	1,300	0.056	11.0	20.0	26.5	22.5	2,500	6,500,000	775N2560(1)00(2)	R775N2560(1)00(2)
500	1,300	0.068	11.0	20.0	32.0	27.5	1,100	2,860,000	775R2680(1)00(2)	R775R2680(1)00(2)
500	1,300	0.082	11.0	20.0	32.0	27.5	1,100	2,860,000	775R2820(1)00(2)	R775R2820(1)00(2)
500	1,300	0.10	13.0	22.0	32.0	27.5	1,100	2,860,000	775R3100(1)00(2)	R775R3100(1)00(2)
700	1,600	0.0010	5.0	11.0	18.0	15.0	9,500	30,400,000	777I1100(1)00(2)	R777I1100(1)00(2)
700	1,600	0.0012	5.0	11.0	18.0	15.0	9,500	30,400,000	777I1120(1)00(2)	R777I1120(1)00(2)
700	1,600	0.0015	5.0	11.0	18.0	15.0	9,500	30,400,000	777I1150(1)00(2)	R777I1150(1)00(2)
700	1,600	0.0018	5.0	11.0	18.0	15.0	9,500	30,400,000	777I1180(1)00(2)	R777I1180(1)00(2)
700	1,600	0.0022	5.0	11.0	18.0	15.0	9,500	30,400,000	777I1220(1)00(2)	R777I1220(1)00(2)
700	1,600	0.0027	6.0	12.0	18.0	15.0	9,500	30,400,000	777I1270(1)00(2)	R777I1270(1)00(2)
700	1,600	0.0033	6.0	12.0	18.0	15.0	9,500	30,400,000	777I1330(1)00(2)	R777I1330(1)00(2)
700	1,600	0.0039	7.5	13.5	18.0	15.0	9,500	30,400,000	777I1390(1)00(2)	R777I1390(1)00(2)
700	1,600	0.0047	7.5	13.5	18.0	15.0	9,500	30,400,000	777I1470(1)00(2)	R777I1470(1)00(2)
700	1,600	0.0056	8.5	14.5	18.0	15.0	9,500	30,400,000	777I1560(1)00(2)	R777I1560(1)00(2)
700	1,600	0.0068	8.5	14.5	18.0	15.0	9,500	30,400,000	777I1680(1)00(2)	R777I1680(1)00(2)
700	1,600	0.0082	10.0	16.0	18.0	15.0	9,500	30,400,000	777I1820(1)00(2)	R777I1820(1)00(2)
700	1,600	0.0082	6.0	15.0	26.5	22.5	4,500	14,400,000	777N1820(1)00(2)	R777N1820(1)00(2)
700	1,600	0.010	6.0	15.0	26.5	22.5	4,500	14,400,000	777N2100(1)00(2)	R777N2100(1)00(2)
700	1,600	0.012	7.0	16.0	26.5	22.5	4,500	14,400,000	777N2120(1)00(2)	R777N2120(1)00(2)
700	1,600	0.015	8.5	17.0	26.5	22.5	4,500	14,400,000	777N2150(1)00(2)	R777N2150(1)00(2)
700	1,600	0.018	10.0	18.5	26.5	22.5	4,500	14,400,000	777N2180(1)00(2)	R777N2180(1)00(2)
700	1,600	0.022	10.0	18.5	26.5	22.5	4,500	14,400,000	777N2220(1)00(2)	R777N2220(1)00(2)
700	1,600	0.027	11.0	20.0	26.5	22.5	4,500	14,400,000	777N2270(1)00(2)	R777N2270(1)00(2)
900	2,000	0.0010	6.0	15.0	26.5	22.5	9,500	38,000,000	779N1100(1)00(2)	R779N1100(1)00(2)
900	2,000	0.0012	6.0	15.0	26.5	22.5	9,500	38,000,000	779N1120(1)00(2)	R779N1120(1)00(2)
900	2,000	0.0015	6.0	15.0	26.5	22.5	9,500	38,000,000	779N1150(1)00(2)	R779N1150(1)00(2)
900	2,000	0.0018	6.0	15.0	26.5	22.5	9,500	38,000,000	779N1180(1)00(2)	R779N1180(1)00(2)
900	2,000	0.0022	6.0	15.0	26.5	22.5	9,500	38,000,000	779N1220(1)00(2)	R779N1220(1)00(2)
900	2,000	0.0027	6.0	15.0	26.5	22.5	9,500	38,000,000	779N1270(1)00(2)	R779N1270(1)00(2)
900	2,000	0.0033	6.0	15.0	26.5	22.5	9,500	38,000,000	779N1330(1)00(2)	R779N1330(1)00(2)
900	2,000	0.0039	6.0	15.0	26.5	22.5	9,500	38,000,000	779N1390(1)00(2)	R779N1390(1)00(2)
900	2,000	0.0047	6.0	15.0	26.5	22.5	9,500	38,000,000	779N1470(1)00(2)	R779N1470(1)00(2)
900	2,000	0.0056	6.0	15.0	26.5	22.5	9,500	38,000,000	779N1560(1)00(2)	R779N1560(1)00(2)
900	2,000	0.0068	7.0	16.0	26.5	22.5	9,500	38,000,000	779N1680(1)00(2)	R779N1680(1)00(2)
900	2,000	0.0082	7.0	16.0	26.5	22.5	9,500	38,000,000	779N1820(1)00(2)	R779N1820(1)00(2)
900	2,000	0.010	8.5	17.0	26.5	22.5	9,500	38,000,000	779N2100(1)00(2)	R779N2100(1)00(2)
900	2,000	0.012	10.0	18.5	26.5	22.5	9,500	38,000,000	779N2120(1)00(2)	R779N2120(1)00(2)
900	2,000	0.015	10.0	18.5	26.5	22.5	9,500	38,000,000	779N2150(1)00(2)	R779N2150(1)00(2)
900	2,000	0.018	11.0	20.0	26.5	22.5	9,500	38,000,000	779N2180(1)00(2)	R779N2180(1)00(2)
VAC	**VDC**	**Capacitance Value (µF)**	**T (mm)**	**H (mm)**	**L (mm)**	**Lead Spacing (S)**	**dV/dt (V/µs)**	**Max K_0 (V^2/µs)**	**New KEMET Part Number**	**Legacy Part Number**

(1) Insert lead and packaging code. See Ordering Options Table for available options.
(2) H = 2.5%, J = 5%, K = 10%.

Soldering Process

The implementation of the RoHS directive has resulted in the selection of SnAgCu (SAC) alloys or SnCu alloys as a primary solder. This has increased the liquidus temperature from that of 183°C for SnPb eutectic alloy to 217 – 221°C for the new alloys. As a result, the heat stress to the components, even in wave soldering, has increased considerably due to higher pre-heat and wave temperatures. Polypropylene capacitors are especially sensitive to heat (the melting point of polypropylene is 160 – 170°C). Wave soldering can be destructive, especially for mechanically small polypropylene capacitors (with lead spacing of 5 mm to 15 mm), and great care has to be taken during soldering. The recommended solder profiles from KEMET should be used. Please consult KEMET with any questions. In general, the wave soldering curve from IEC Publication 61760–1 Edition 2 serves as a solid guideline for successful soldering. Please see Figure 1.

Reflow soldering is not recommended for through-hole film capacitors. Exposing capacitors to a soldering profile in excess of the above recommended limits may result in degradation or permanent damage to the capacitors.

Do not place the polypropylene capacitor through an adhesive curing oven to cure resin for surface mount components. Insert through-hole parts after the curing of surface mount parts. Consult KEMET to discuss the actual temperature profile in the oven, if through-hole components must pass through the adhesive curing process. A maximum two soldering cycles is recommended. Please allow time for the capacitor surface temperature to return to a normal temperature before the second soldering cycle.

Manual Soldering Recommendations

The following is recommended for manual soldering with a soldering iron.

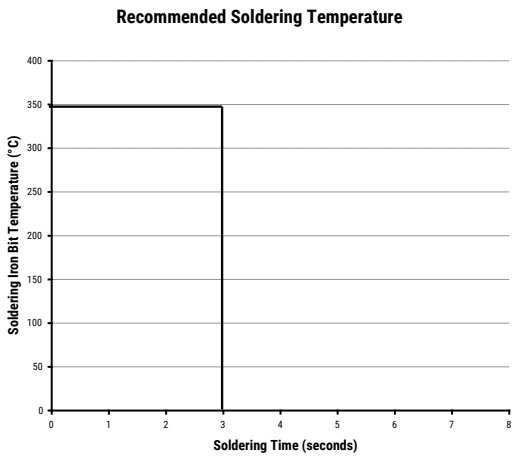

The soldering iron tip temperature should be set at 350°C (+10°C maximum) with the soldering duration not to exceed more than 3 seconds.

Wave Soldering Recommendations

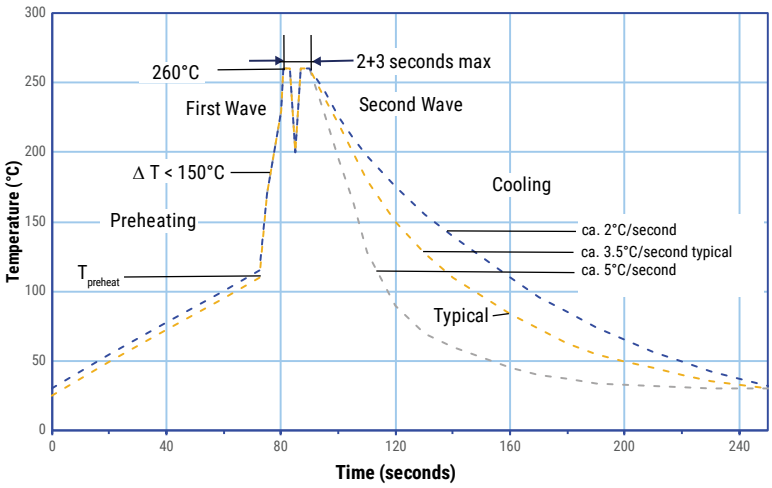

Soldering Process cont.

Wave Soldering Recommendations cont.

1. The table indicates the maximum set-up temperature of the soldering process Figure 1.

Dielectric Film Material	Maximum Preheat Temperature		Maximum Peak Soldering Temperature	
	Capacitor Pitch ≤ 15 mm	Capacitor Pitch > 15 mm	Capacitor Pitch ≤ 15 mm	Capacitor Pitch > 15 mm
Polyester	130°C	130°C	270°C	270°C
Polypropylene	110°C	130°C	260°C	270°C
Paper	130°C	140°C	270°C	270°C
Polyphenylene Sulphide	150°C	160°C	270°C	270°C

2. The maximum temperature measured inside the capacitor:
   Set the temperature so that inside the element the maximum temperature is below the limit:

Dielectric Film Material	Maximum temperature measured inside the element
Polyester	160°C
Polypropylene	110°C
Paper	160°C
Polyphenylene Sulphide	160°C

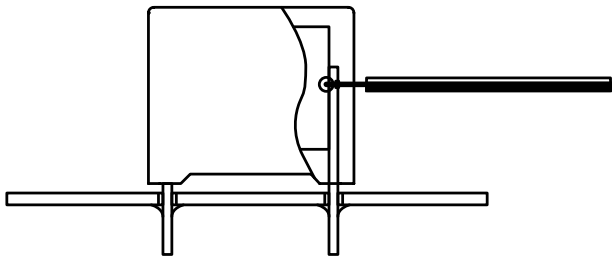

Temperature monitored inside the capacitor.

Selective Soldering Recommendations

Selective dip soldering is a variation of reflow soldering. In this method, the printed circuit board with through-hole components to be soldered is preheated and transported over the solder bath as in normal flow soldering without touching the solder. When the board is over the bath, it is stopped and pre-designed solder pots are lifted from the bath with molten solder only at the places of the selected components, and pressed against the lower surface of the board to solder the components.

The temperature profile for selective soldering is similar to the double wave flow soldering outlined in this document, **however, instead of two baths, there is only one bath with a time from 3 to 10 seconds.** In selective soldering, the risk of overheating is greater than in double wave flow soldering. Great care must be taken so that the parts are not overheated.

Construction

1 Section

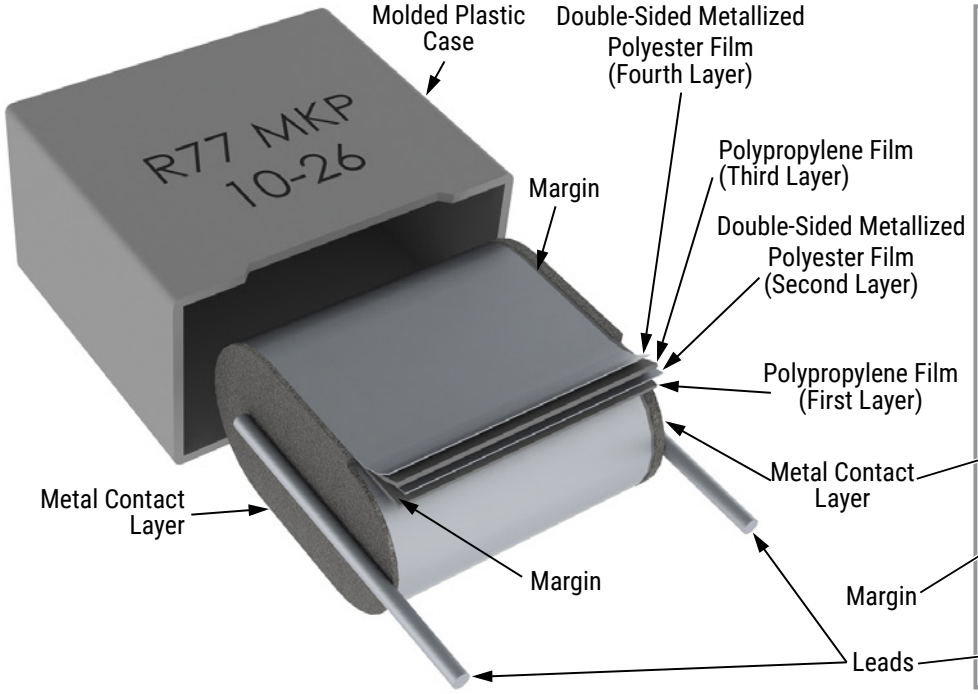

Detailed Cross Section

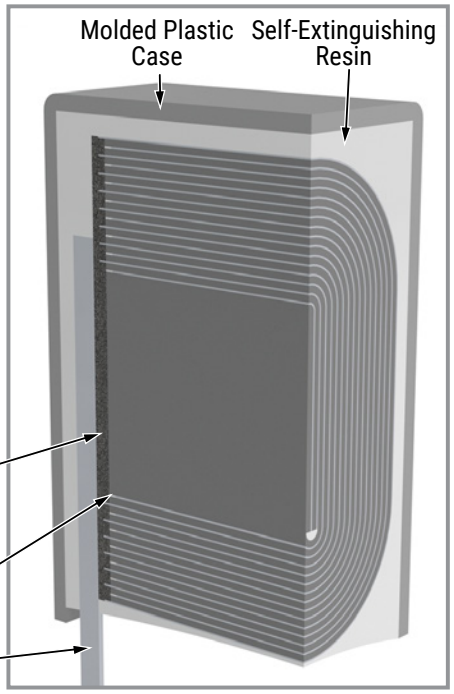

Winding Schemes

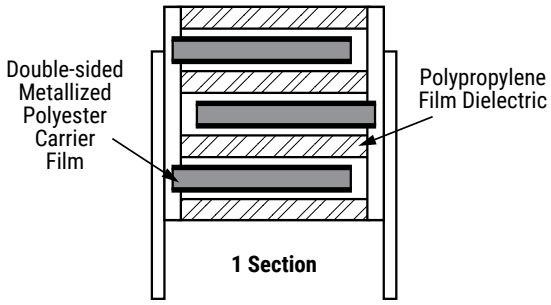

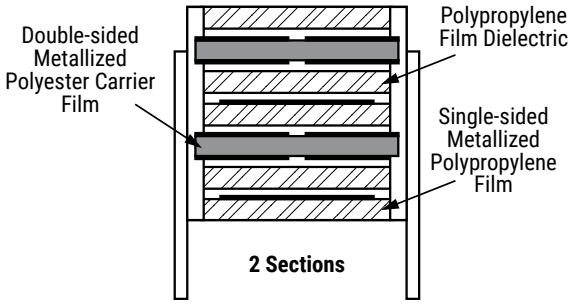

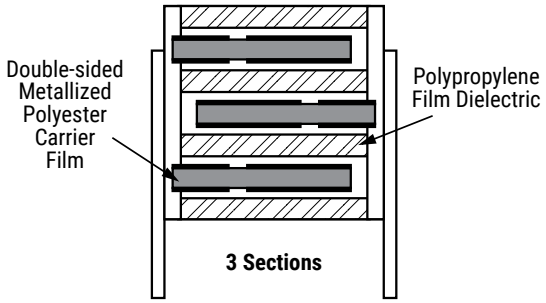

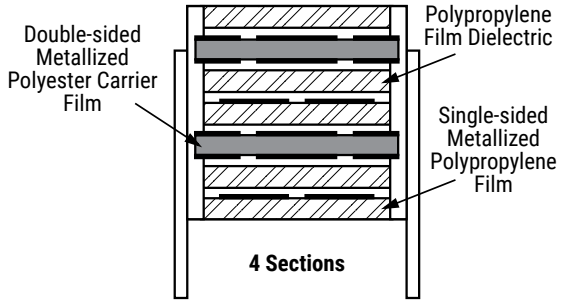

Marking

Pitch – 15 & 22.5

Marking Variants*

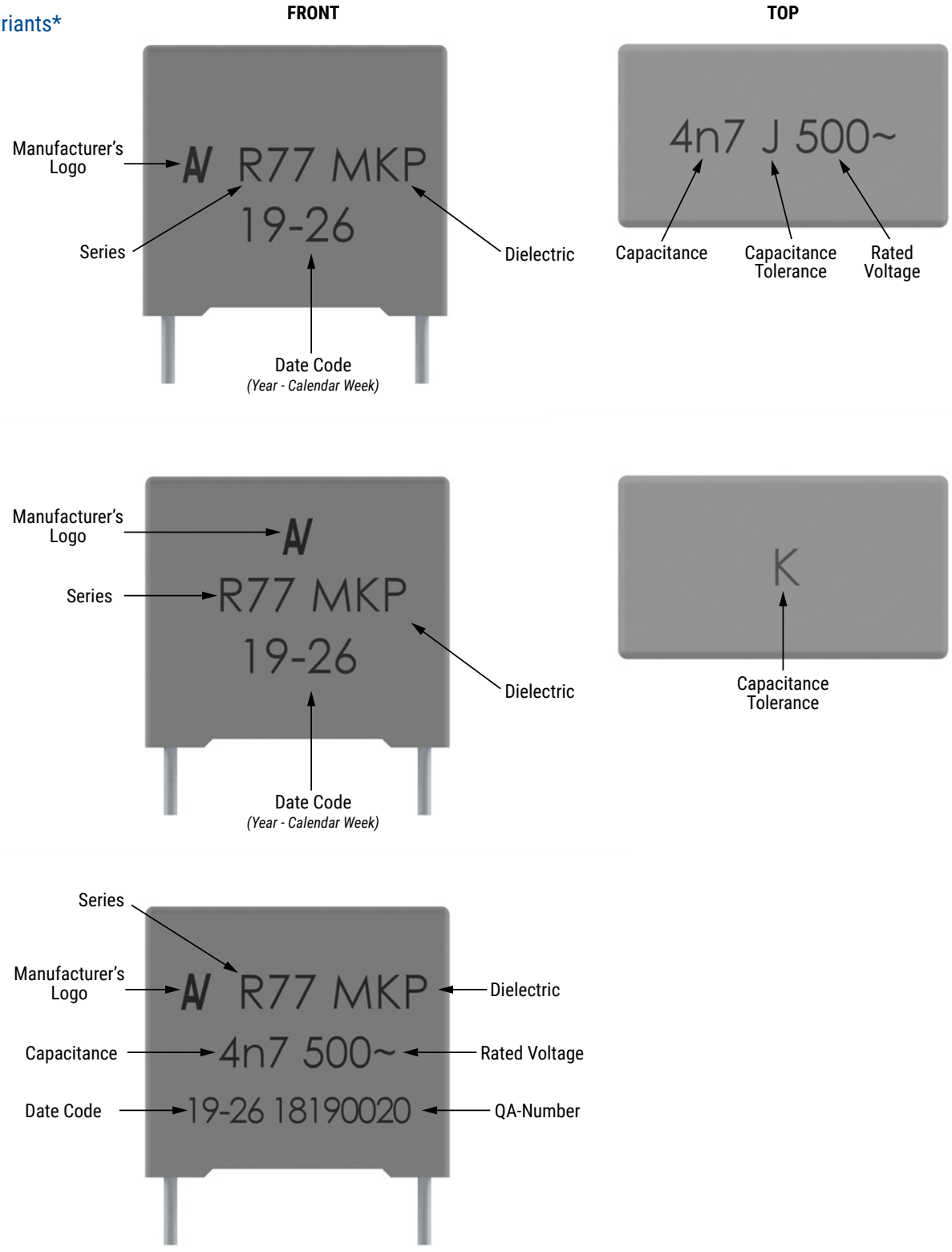

** Differences are caused by technology (Clichee or ink) and technic (production line)*

Marking cont.

Manufacturing Date Code (IEC–60062)							
Year	Code	Year	Code	Month	Code	Month	Code
2010	A	2020	M	January	1	July	7
2011	B	2021	N	February	2	August	8
2012	C	2022	P	March	3	September	9
2013	D	2023	R	April	4	October	O
2014	E	2024	S	May	5	November	N
2015	F	2025	T	June	6	December	D
2016	H	2026	U				
2017	J	2027	V				
2018	K	2028	W				
2019	L	2029	X				
2020	M	2030	A				

Packaging Quantities

Lead Spacing	Thickness (mm)	Height (mm)	Length (mm)	Bulk Short Leads	Bulk Long Leads		Standard Reel ø 355 mm	Large Reel ø 500 mm	Ammo Taped
	Lead and Packaging Code			AA - JB JE - JH	JM	40 - 50	GY	CK	DQ
15	5.0	11.0	18.0	2,000	1,250	1,000	600	1,250	800
	6.0	12.0	18.0	1,750	1,000	900	500	1,000	680
	7.5	13.5	18.0	1,000	800	700	350	800	500
	8.5	14.5	18.0	1,000	650	500	300	700	440
	9.0	12.5	18.0	1,000	700	520	270	650	410
	10.0	16.0	18.0	750	550	500	270	600	380
22.5	6.0	15.0	26.5	805	450	500	300	700	464
	7.0	16.0	26.5	700	450	500	250	550	380
	8.5	17.0	26.5	468	350	300	250	450	280
	10.0	18.5	26.5	396	350	300	160	350	235
	11.0	20.0	26.5	360	200	250	160	350	217
27.5	11.0	20.0	32.0	560	336	336	190	350	-
	13.0	22.0	32.0	672	288	288	-	-	-

Lead Taping & Packaging (IEC 60286–2)

Figure 1 — Lead Spacing 7.5 mm

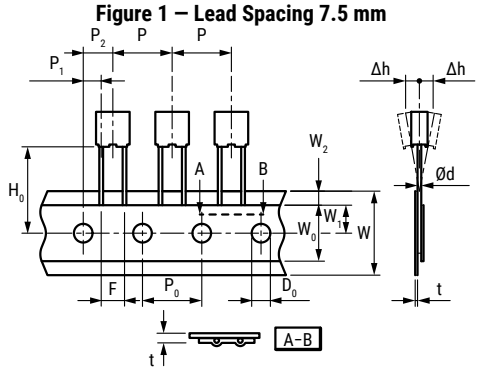

Lead Spacing 10 & 15 mm

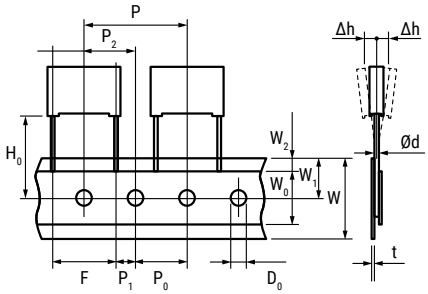

Lead Spacing 22.5 & 27.5 mm

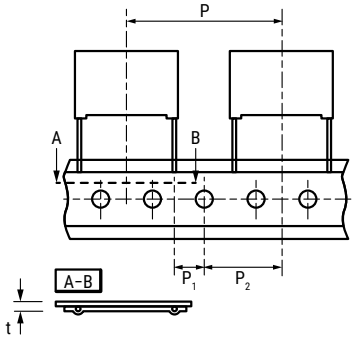

Taping Specification

Description	Symbol	Dimensions (mm)					
		Lead Spacing					Tolerance
		7.5	10.0	15.0	22.5	27.5	
		Figure 1	Figure 2	Figure 2	Figure 3	Figure 3	
Lead wire diameter	d	0.5 – 0.6	0.6	0.6 – 0.8	0.8	0.8	±0.05
Taping lead space	P	12.7	25.4	25.4	38.1	38.1	±1
Feed hole lead space *	P_0	12.7	12.7	12.7	12.7	12.7	±0.2 **
Centering of the lead wire	P_1	2.6	7.7	5.2	7.8	5.3	±0.7
Centering of the body	P_2	6.35	12.7	12.7	19.05	19.05	±1.3
Lead spacing ***	F	7.5	10.0	15.0	22.5	27.5	+0.6/−0.1
Component alignment	Δh	0	0	0	0	0	±2
Component deviation	Δp	0	0	0	0	0	±1
Height of component from tape center	H_0****	18.5	18.5	18.5	18.5	18.5	±0.5
Carrier tape width	W	18	18	18	18	18	+1/−0.5
Hold down tape width	W_0	6	9	10	10	10	Minimum
Hole position	W_1	9	9	9	9	9	±0.5
Hold down tape position	W_2	3	3	3	3	3	Maximum
Feed hole diameter	D_0	4	4	4	4	4	±0.2
Total tape thickness	t	0.7	0.7	0.7	0.7	0.7	±0.2

** Available also 15 mm.*
*** Maximum 1 mm on 20 lead spacing.*
**** 15 mm and 10 mm taped to 7.5 mm (crimped leads) available upon request.*
***** H_0 = 16.5 mm is available upon request.*

Lead Taping & Packaging (IEC 60286–2) cont.

Ammo Specifications

Dimensions (mm)		
H	W	T
360	340	59

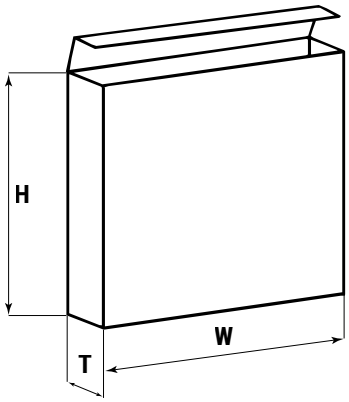

Reel Specifications

Dimensions (mm)		
D	H	W
355 500	30 25	55 Maximum

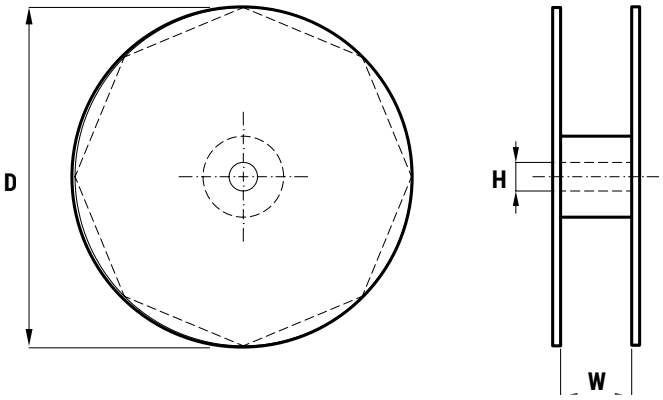

KEMET Electronics Corporation Sales Offices

For a complete list of our global sales offices, please visit www.kemet.com/sales.

Disclaimer

All product specifications, statements, information and data (collectively, the "Information") in this datasheet are subject to change. The customer is responsible for checking and verifying the extent to which the Information contained in this publication is applicable to an order at the time the order is placed. All Information given herein is believed to be accurate and reliable, but it is presented without guarantee, warranty, or responsibility of any kind, expressed or implied.

Statements of suitability for certain applications are based on KEMET Electronics Corporation's ("KEMET") knowledge of typical operating conditions for such applications, but are not intended to constitute – and KEMET specifically disclaims – any warranty concerning suitability for a specific customer application or use. The Information is intended for use only by customers who have the requisite experience and capability to determine the correct products for their application. Any technical advice inferred from this Information or otherwise provided by KEMET with reference to the use of KEMET's products is given gratis, and KEMET assumes no obligation or liability for the advice given or results obtained.

Although KEMET designs and manufactures its products to the most stringent quality and safety standards, given the current state of the art, isolated component failures may still occur. Accordingly, customer applications which require a high degree of reliability or safety should employ suitable designs or other safeguards (such as installation of protective circuitry or redundancies) in order to ensure that the failure of an electrical component does not result in a risk of personal injury or property damage.

Although all product–related warnings, cautions and notes must be observed, the customer should not assume that all safety measures are indicted or that other measures may not be required.

KEMET is a registered trademark of KEMET Electronics Corporation.