UGT591

Ultrasonic sensor

UGQ01200F2KG/US

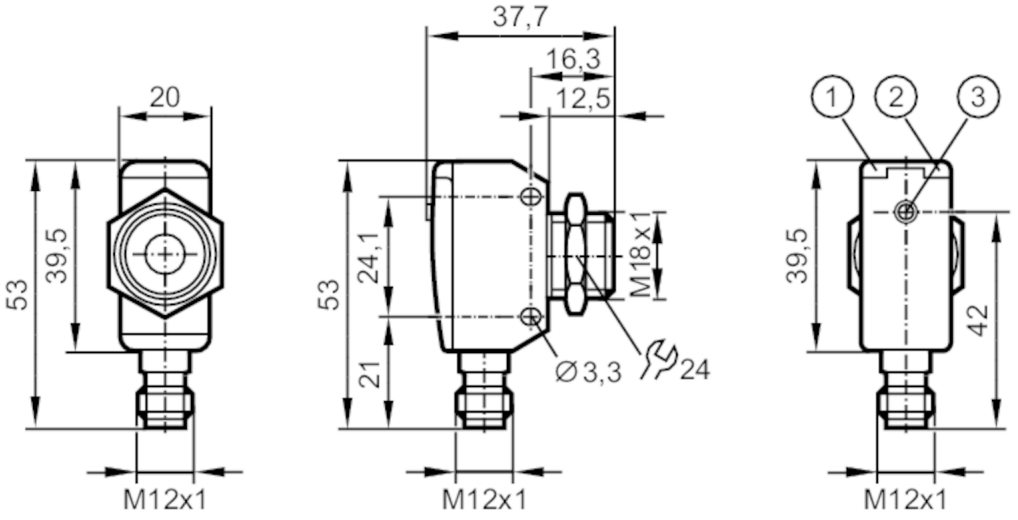

1 LED echo
2 LED switching status
3 teach button

Product characteristics		
Electrical design		NPN
Output function		normally open / normally closed; (parameterisable + 1x voltage output)
Sensing range	[mm]	80...1200; (Target: 200 x 200 mm)
Housing		rectangular
Dimensions	[mm]	M18 x 1
Electrical data		
Operating voltage	[V]	10...30 DC; ("supply class 2" to cULus)
Current consumption	[mA]	< 35
Protection class		III
Reverse polarity protection		yes
Power-on delay time	[s]	< 0.3
Converter frequency	[kHz]	200
Inputs / outputs		
Number of inputs and outputs		Number of digital outputs: 1; Number of analogue outputs: 1

UGT591

Ultrasonic sensor

UGQ01200F2KG/US

Outputs		
Total number of outputs		2
Electrical design		NPN
Number of digital outputs		1
Output function		normally open / normally closed; (parameterisable + 1x voltage output)
Max. voltage drop switching output DC	[V]	2.2
Permanent current rating of switching output DC	[mA]	100
Switching frequency DC	[Hz]	5
Number of analogue outputs		1
Analogue voltage output	[V]	0...10
Min. load resistance	[Ω]	3000
Short-circuit protection		yes
Overload protection		yes
Detection zone		
Sensing range	[mm]	80...1200; (Target: 200 x 200 mm)
Blind zone	[mm]	80
Angle of aperture cylindrical	[°]	14; (±2)
Max. deviation from the 90° angle sensor/object	[°]	± 4
Accuracy / deviations		
Temperature compensation		yes
Hysteresis	[%]	< 1
Switch point drift	[%]	-5...5
Linearity error of analogue output	[%]	≤ 1
Repeatability		1 %
Resolution	[mm]	3
Notes on the accuracy / deviation		The indicated values are reached after a warm-up time of min. 20 minutes
Response times		
Response time	[ms]	< 450; (analogue output)
Operating conditions		
Ambient temperature	[°C]	-20...70
Storage temperature	[°C]	-30...80
Protection		IP 67

UGT591

Ultrasonic sensor

UGQ01200F2KG/US

Tests / approvals			
EMC		EN 61000-4-2 ESD	4 kV CD / 8 kV AD
		EN 61000-4-3 HF radiated	3 V/m
		EN 61000-4-4 Burst	2 kV
		EN 61000-4-6 HF conducted	3 V
		EN 55011	Class A
Vibration resistance		EN 60068-2-6 Fc	(10-55) Hz 1 mm amplitude, oscillation period 5 min., 30 min. per axis at resonance or 55 Hz
Shock resistance		EN 60068-2-27 Ea	30 g 11 ms half-sine; 3 shocks each in every direction of the 3 coordinate axes
MTTF	[years]	190	
UL approval		Ta	-20...70 °C
		voltage supply	Class 2
		File number UL	E174191
Mechanical data			
Weight	[g]	97.5	
Housing		rectangular	
Dimensions	[mm]	M18 x 1	
Thread designation		M18 x 1	
Materials		1.4542 (17-4 PH / 630); PBT; PA; epoxy glass ceramics	
Tightening torque	[Nm]	50	
Displays / operating elements			
Display		switching status	1 x LED, yellow
		echo	1 x LED, green
Teach function		yes	
Accessories			
Items supplied		lock nuts: 1, stainless steel	
Remarks			
Remarks		operating voltage "supply class 2" according to cULus	
Pack quantity		1 pcs.	
Electrical connection			

Connector: 1 x M12; coding: A



UGT591

Ultrasonic sensor

UGQ01200F2KG/US

Connection

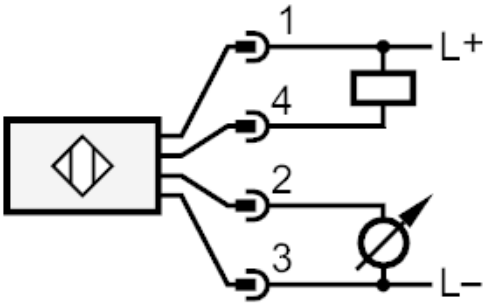

UGT591

Ultrasonic sensor

UGQ01200F2KG/US

Diagrams and graphs

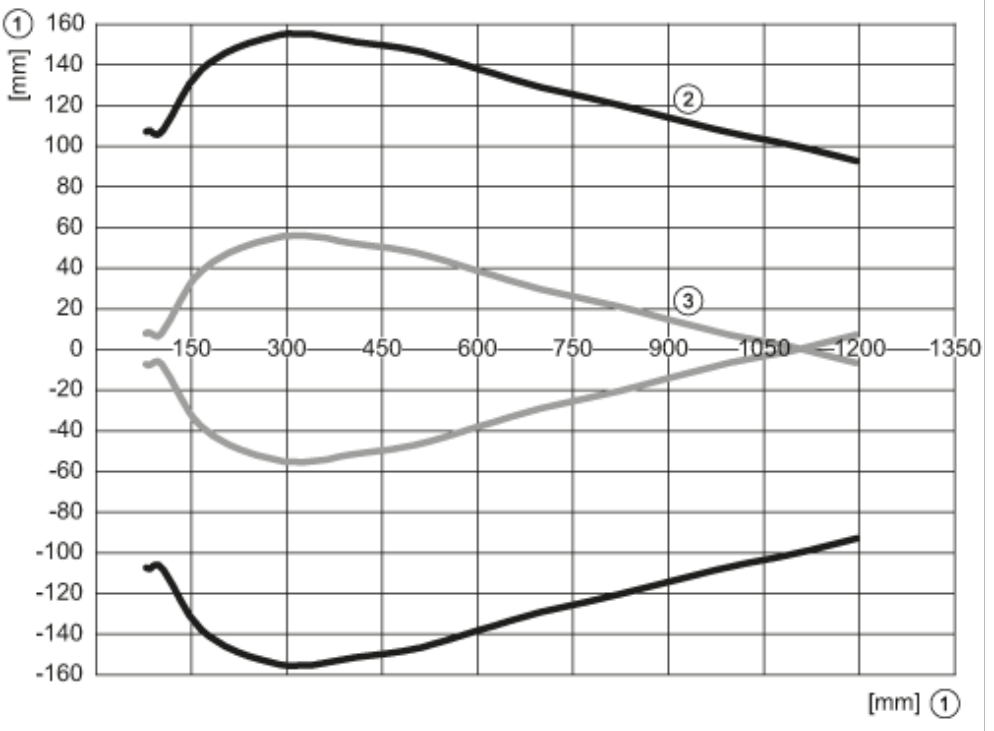

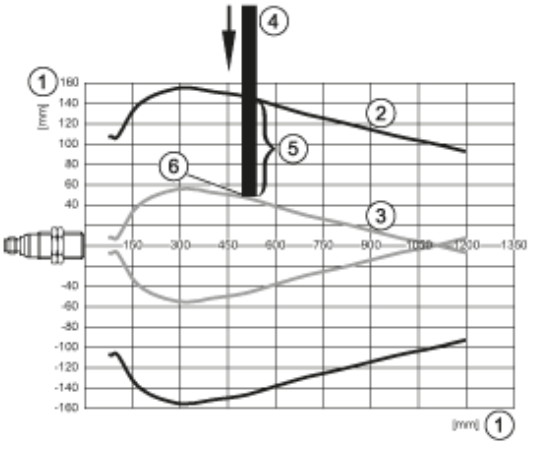

1: distance

2: Detection zone

3: switch-on/switch-off graph

4: Target 200 x 200 mm

5: 50% of the target in the detection zone

6: switch point