Description

The XF devices are ultra-low phase noise quartz-based PLL oscillators supporting a large range of frequencies and output interface types. These devices are designed to operate at three different power supplies with several pinout configurations, as well as two operational temperature ranges.

The XF devices can be programmed to generate an output frequency from 15MHz to 2100MHz with a resolution as low as 1Hz accuracy. The configuration capability of this family of devices allows for fast delivery times for both sample and large production orders.

Parts are for one time programming (OTP) at the factory for a fixed frequency application, or can be field programmable using I2C, based on system needs (see notes under Pin Descriptions).

Features

- Output types: LVDS, LVPECL, CML
  - Frequency range: 15MHz to 2100MHz
- Output type: HCSL
  - Frequency range: 15MHz to 725MHz
- Supply voltage options: 1.8V, 2.5V, or 3.3V
- Phase jitter (12kHz to 20MHz): 120fs typical
- Package options:
  - 5.0 × 3.2 mm
  - 3.2 × 2.5 mm
  - 2.5 × 2.0 mm
- Operating temperatures and frequency stability:
  - -40°C to +85°C, ±25ppm
  - -40°C to +105°C, ±50ppm

Typical Applications

- FOM Gear Box
- Data centers
- 10G / 40G / 100G / 400G Ethernet

Pin Assignments

Figure 1. 2.5 × 2.0 mm Package

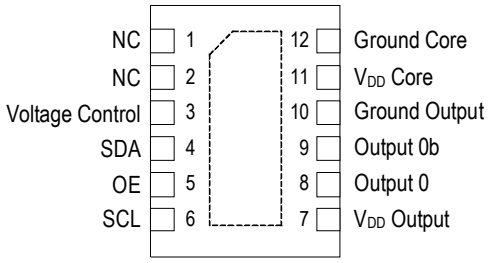

Figure 2. 5.0 × 3.2 mm and 3.2 × 2.5 mm Packages

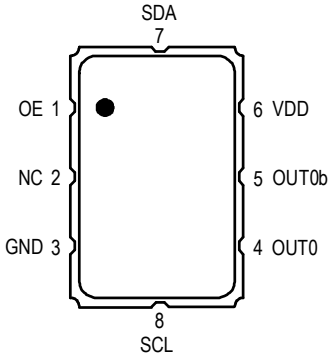

Pin Descriptions

Table 1. Pin Descriptions for 2.5 × 2.0 mm Package

Pin Number	Pin Name	Description
1	NC	No connect.
2	NC	No connect.
3	Voltage Control [2]	Voltage control for VCXO option.
4	SDA [1]	Serial data.
5	OE	Output enable.
6	SCL [1]	Serial clock.
7	V_{DD} Output	Supply voltage.
8	Output 0	Output 0.
9	Output 0b	Complementary output 0.
10	Ground Output	Connect to ground.
11	V_{DD} Core	Supply voltage.
12	Ground Core	Connect to ground.
13	EPAD (dotted area shown in Pin Assignments diagram)	Connect to ground (required for heat dissipation).

[1] Pins 4 and 6 are no connect for non-I2C applications.

[2] Pin 3 is no connect for non-analog VCXO applications.

See Ordering Information (VCXO) for more details.

Table 2. Pin Descriptions for 5.0 × 3.2 mm and 3.2 × 2.5 mm Packages

Pin #	Pin Name	Description
1	OE	Output Enable (0 = output disabled, pulled high internally)
2	NC	No connect
3	GND	Connect to ground
4	OUT0	Output
5	OUT0b	Complementary output
6	V_{DD}	Supply voltage
7	SDA [1]	Serial data
8	SCL [1]	Serial clock

[1] Pins 7 and 8 are no connect for non-I2C applications.

See Ordering Information (VCXO) for more details.

Ordering Information (XO)

Custom Part Configuration Utility: https://www.renesas.com/customxo

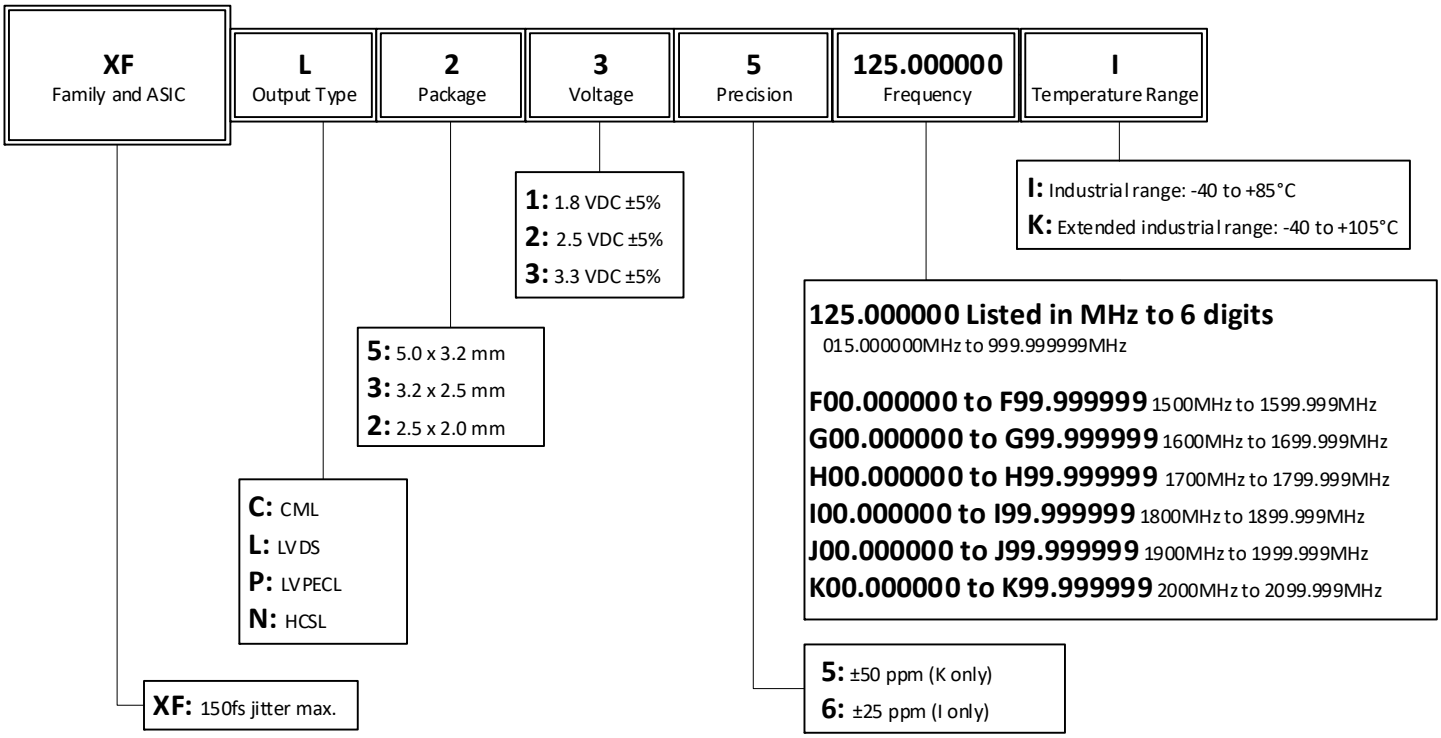

Ordering Information (VCXO)

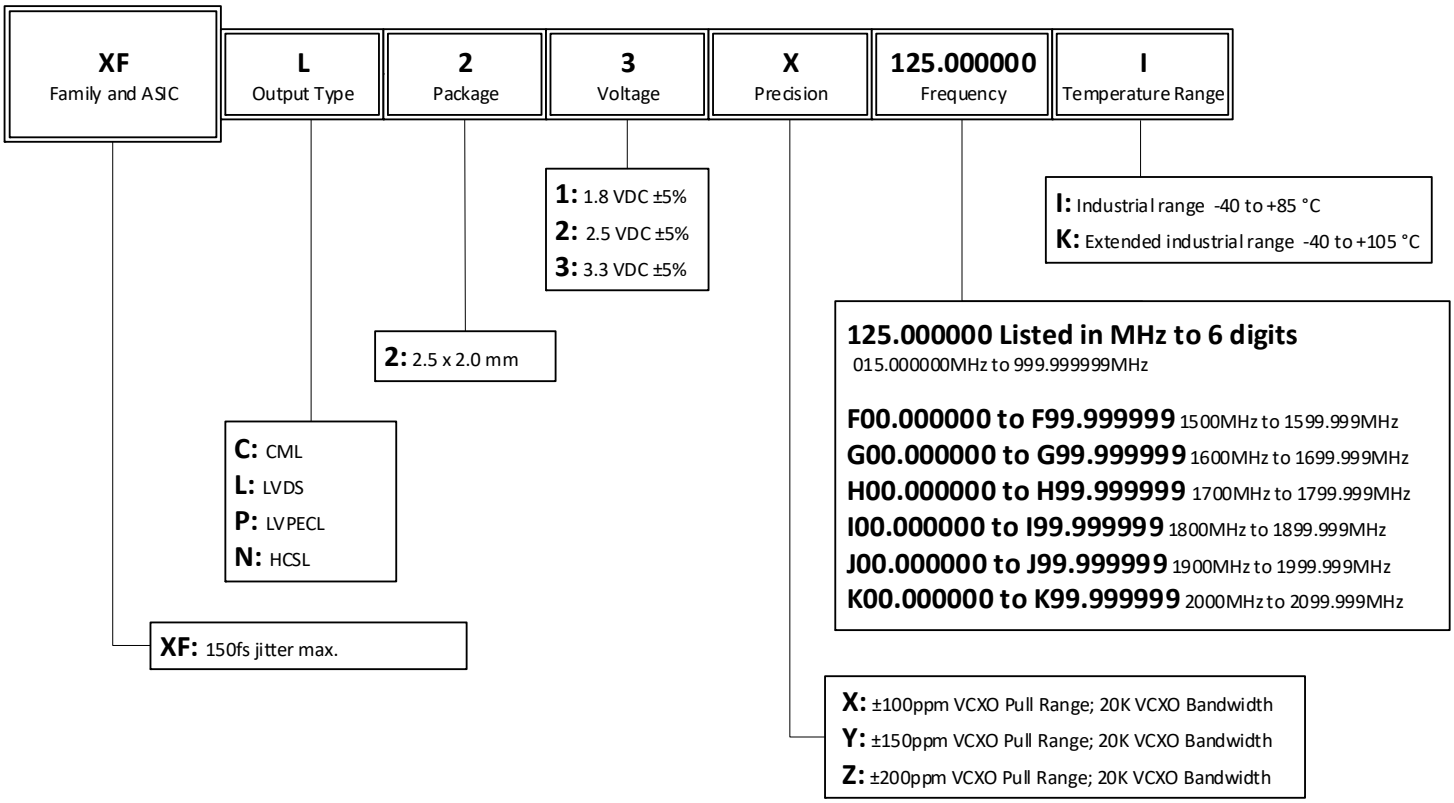

Contents

Description . . . 1
Typical Applications . . . 1
Features . . . 1
Pin Assignments . . . 1
Pin Descriptions . . . 2
Ordering Information (XO) . . . 3
Ordering Information (VCXO) . . . 3
Absolute Maximum Ratings . . . 5
ESD Compliance . . . 5
Mechanical Testing . . . 5
Solder Reflow Profile . . . 5
DC Electrical Characteristics . . . 6
AC Electrical Characteristics . . . 8
Output Waveforms . . . 12
Termination for 3.3V LVPECL Outputs . . . 13
Termination for 2.5V LVPECL Outputs . . . 14
LVDS Driver Termination . . . 15
Recommended Termination for HCSL Outputs . . . 16
CML Termination . . . 16
Package Outline Drawings . . . 17
Marking Diagrams . . . 17
Revision History . . . 18

Absolute Maximum Ratings

Stresses above the ratings listed below can cause permanent damage to the device. These ratings, which are standard values for Renesas commercially rated parts, are stress ratings only. Functional operation of the device at these or any other conditions above those indicated in the operational sections of the specifications is not implied. Exposure to absolute maximum rating conditions for extended periods can affect product reliability. Electrical parameters are guaranteed only over the recommended operating temperature range. Thermal characteristics, in actual applications, should be assessed case by case to guarantee junction temperature does not exceed 125°C.

Table 3. Absolute Maximum Ratings

Item	Rating					
V_{DD}	-0.5V to +3.8V					
E/D	-0.5V to +3.8V					
Storage Temperature	-55°C to 125°C					
Maximum Junction Temperature	125°C					
Theta J_A [1]	2.5 × 2.0 mm (NJG12)	97.0 °C/W	3.2 × 2.5 mm (LNG8)	131.47 °C/W	5.0 × 3.2 mm (LXG8)	138.43 °C/W
Theta J_B [1]		62.2 °C/W		92.89 °C/W		97.42 °C/W

[1] Thermal characteristics are based on simulation in standard condition.

ESD Compliance

Table 4. ESD Compliance

Human Body Model (HBM)	2000V

Mechanical Testing

Table 5. Mechanical Testing *

Parameter	Test Method
Mechanical Shock	Half-sine wave with 0.3ms 3000G. X, Y, Z each direction 1 time.
Mechanical Vibration	Frequency: 10 to 55MHz amplitude: 1.5mm. Frequency: 55–2000Hz peak value: 20G. Duration time: 4H for each X,Y,Z axis; total 12hours.
High Temp Operating Life (HTOL)	1000 hours at 125°C (under power).
Hermetic Seal	Gross leak (air leak test). Fine leak (Helium leak test) He-pressure: 6kgf/cm² 2 hours.

* MSL level does not apply.

Solder Reflow Profile

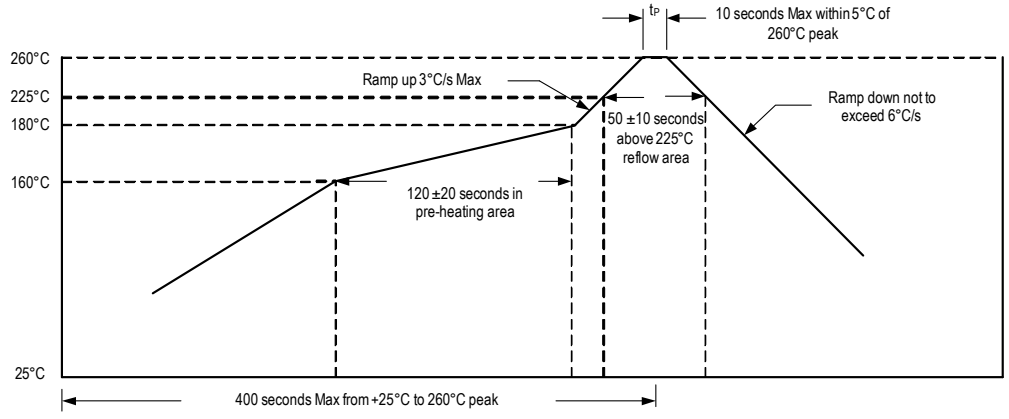

DC Electrical Characteristics

Note for all DC Electrical Characteristics tables: A pull-up resistor from V_{DD} to OE enables output when pin 5 is left open.

Table 6. 3.3V IDD DC Electrical Characteristics

V_{DD} = 3.3V ±5%, T_A = -40°C to +85°C, -40°C to +105°C, typical at 156.25MHz.

Symbol	Parameter	Output Type	Conditions	Minimum	Typical	Maximum	Units
I_{DD}	Current Consumption	LVDS	15MHz to 400MHz.	—	59	67	mA
			400MHz to 2.1GHz.	—	—	85	
		LVPECL	15MHz to 212.5MHz.	—	84	94	
			212MHz to 400MHz.	—	—	110	
			400MHz to 2.1GHz.	—	—	110	
		HCSL	15MHz to 725MHz.	—	74	83	
		CML	15MHz to 2.1GHz.	—	45	61	

Table 7. 2.5V IDD DC Electrical Characteristics

V_{DD} = 2.5V ±5%, T_A = -40°C to +85°C, -40°C to +105°C, typical at 156.25MHz.

Symbol	Parameter	Output Type	Conditions	Minimum	Typical	Maximum	Units
I_{DD}	Current Consumption	LVDS	15MHz to 400MHz.	—	59	66	mA
			400MHz to 2.1GHz.	—	—	85	
		LVPECL	15MHz to 156.25MHz.	—	84	94	
			156.25MHz to 400MHz.	—	—	110	
			400MHz to 2.1GHz.	—	—	110	
		HCSL	15MHz to 400MHz.	—	—	95	
			400MHz to 725MHz.	—	74	82	
		CML	15MHz to 2.1GHz.	—	54	61	

Table 8. 1.8V IDD DC Electrical Characteristics

V_{DD} = 1.8V ±5%, T_A = -40°C to +85°C, -40°C to +105°C, typical at 156.25MHz.

Symbol	Parameter	Output Type	Conditions	Minimum	Typical	Maximum	Units
I_{DD}	Current Consumption	LVDS	15MHz to 400MHz.	—	59	66	mA
			400MHz to 2.1GHz.	—	—	85	
		LVPECL	15MHz to 250MHz.	—	84	93	
			250MHz to 2.1GHz.	—	—	110	
		HCSL	15MHz to 400MHz.	—	—	95	
			400MHz to 725MHz.	—	74	81	
		CML	15MHz to 2.1GHz.	—	54	61	

Table 9. LVCMOS DC Electrical Characteristics

V_{DD} = 3.3V, 2.5V, 1.8V ±5%, T_A = -40°C to +85°C, -40°C to +105°C, typical at 156.25MHz.

Symbol	Parameter	Conditions	Minimum	Typical	Maximum	Units
V_{IH}	Input High Voltage (OE pin only)	V_{DD} = 3.3V, 2.5V, 1.8V ±5%	0.7 × V_{DD}	—	V_{DD} + 0.3	V
V_{IL}	Input Low Voltage (OE pin only)	V_{DD} = 3.3V, 2.5V, 1.8V ±5%	GND - 0.3	—	0.3 × V_{DD}	V

Table 10. LVDS DC Electrical Characteristics

V_{DD} = 3.3V, 2.5V, 1.8V ±5%, T_A = -40°C to +85°C, -40°C to +105°C, typical at 156.25MHz.

Symbol	Parameter	Conditions	Minimum	Typical	Maximum	Units
V_{OD}	Differential Output Voltage	V_{DD} = 3.3V, 2.5V, 1.8V ±5%	0.30	0.44	0.60	V
V_{OS}	Output Offset Voltage	V_{DD} = 3.3V ±5%	1.11	1.26	1.41	V
		V_{DD} = 2.5V ±5%	1.08	1.25	1.41	
		V_{DD} = 1.8V ±5%	0.75	0.88	1.01	

Table 11. LVPECL DC Electrical Characteristics

V_{DD} = 3.3V, 2.5V, 1.8V ±5%, T_A = -40°C to +85°C, -40°C to +105°C, typical at 156.25MHz.

Symbol	Parameter	Conditions	Minimum	Typical	Maximum	Units
V_{OH}	Output High Voltage	V_{DD} = 3.3V ±5%.	2.28	2.49	2.72	V
		V_{DD} = 2.5V ±5%.	1.52	1.69	1.87	
		V_{DD} = 1.8V ±5%.	0.83	0.96	1.11	
V_{OL}	Output Low Voltage	V_{DD} = 3.3V ±5%.	1.68	1.84	2.01	
		V_{DD} = 2.5V ±5%.	0.92	1.04	1.17	
		V_{DD} = 1.8V ±5%.	0.19	0.30	0.42	

Table 12. HCSL DC Electrical Characteristics

V_{DD} = 3.3V, 2.5V, 1.8V ±5%, T_A = -40°C to +85°C, -40°C to +105°C, typical at 156.25MHz.

Symbol	Parameter	Conditions	Minimum	Typical	Maximum	Units
V_{OH}	Output High Voltage	V_{DD} = 3.3V ±5%.	0.78	0.92	1.07	V
		V_{DD} = 2.5V ±5%.	0.74	0.88	1.03	
		V_{DD} = 1.8V ±5%.	0.67	0.81	0.95	
V_{OL}	Output Low Voltage	—	-0.06	0.07	0.20	

Table 13. CML DC Electrical Characteristics

V_{DD} = 3.3V, 2.5V, 1.8V ±5%, T_A = -40°C to +85°C, -40°C to +105°C, typical at 156.25MHz.

Symbol	Parameter	Conditions	Minimum	Typical	Maximum	Units
V_{OH}	Output High Voltage	V_{DD} = 3.3V ±5%.	3.09	3.26	3.43	V
		V_{DD} = 2.5V ±5%.	2.33	2.46	2.59	
		V_{DD} = 1.8V ±5%.	1.66	1.76	1.85	
V_{OL}	Output Low Voltage	V_{DD} = 3.3V ±5%.	2.70	2.85	3.00	V
		V_{DD} = 2.5V ±5%.	1.95	2.06	2.17	
		V_{DD} = 1.8V ±5%.	1.30	1.37	1.45	

Table 14. DC Electrical Characteristics – Leakage Current

V_{DD} = 3.3V, 2.5V, 1.8V ±5%, T_A = -40°C to +85°C, -40°C to +105°C, typical at 156.25MHz.

Symbol	Parameter	Input	Conditions	Minimum	Typical	Maximum	Units
I_{IH}	Input Leakage High	OE	V_{DD} = 3.3V ±5%.	-5	0.81	5	µA
		SCLK		-5	1.36	5	
		SDATA		-5	1.44	5	
I_{IL}	Input Leakage Low	OE	V_{DD} = 3.3V ±5%.	-20	-17.44	-14	µA
		SCLK		-37	-33.49	-30	
		SDATA		-20	-17.02	-14	

AC Electrical Characteristics

Notes for all AC Electrical Characteristics tables:

1. A pull-up resistor from V_{DD} to OE enables output when pin 5 is left open.

2. Installation should include a 0.01µF bypass capacitor placed between V_{DD} and GND to minimize power supply line noise.

Table 15. 3.3V AC Electrical Characteristics

V_{DD} = 3.3V ±5%, T_A = -40°C to +85°C, -40°C to +105°C.

Symbol	Parameter	Test Condition	Minimum	Typical	Maximum	Units
F	Output Frequency Range	LVDS, LVPECL, CML.	15	—	2100	MHz
		HCSL.	15	—	725	
	Frequency Stability	Temperature = -40°C to +85°C.	—	—	±25	ppm
		Temperature = -40°C to +105°C.	—	—	±50	ppm
	Frequency Tolerance (25°C)	Temperature = 25°C.	—	—	±15	ppm
	Aging (1st year)	T_A = 25°C.	—	—	±3	ppm
	Aging (10 years)	T_A = 25°C.	—	—	±10	ppm

Table 15. 3.3V AC Electrical Characteristics (Cont.)

V_{DD} = 3.3V ±5%, T_A = -40°C to +85°C, -40°C to +105°C.

Symbol	Parameter	Test Condition		Minimum	Typical	Maximum	Units
	Output Load	LVDS.	Differential.	—	100	—	Ω
		LVPECL.	V_{DD} - 2.0V.	—	50	—	
		HCSL.	To GND.	—	50	—	
T_{ST}	Start-up Time	Output valid time after V_{DD} meets minimum specified level.		—	5	—	ms
t_R	Output Rise Time	LVDS.	20% – 80%, 156.25MHz	—	299	400	ps
		LVPECL.		—	287	400	
		HCSL.		—	306	400	
		CML		—	301	400	
t_F	Output Fall Time	LVDS.	80% – 20%, 156.25MHz	—	279	400	ps
		LVPECL.		—	274	400	
		HCSL.		—	284	400	
		CML		—	279	400	
O_{DC}	Output Clock Duty Cycle	LVDS.	156.25MHz	48	—	52	%
		LVPECL.	156.25MHz	48	—	52	
		HCSL.	156.25MHz	48	—	52	
		CML	156.25MHz	48	—	52	
T_{OE}	Output Enable/Disable Time	—	—	—	1	—	ms

Table 16. 2.5V AC Electrical Characteristics

V_{DD} = 2.5V ±5%, T_A = -40°C to +85°C, -40°C to +105°C.

Symbol	Parameter	Test Condition		Minimum	Typical	Maximum	Units
F	Output Frequency Range	LVDS, LVPECL, CML.		15	—	2100	MHz
		HCSL.		15	—	725	
	Frequency Stability	Temperature = -40°C to +85°C.		—	—	±25	ppm
		Temperature = -40°C to +105°C.		—	—	±50	ppm
	Frequency Tolerance (25°C)	Temperature = 25°C.		—	—	±15	ppm
	Aging (1st year)	T_A = 25°C.		—	—	±3	
	Aging (10 years)	T_A = 25°C.		—	—	±10	
	Output Load	LVDS.	Differential.	—	100	—	Ω
		LVPECL.	V_{DD} - 2.0V.	—	50	—	
		HCSL.	To GND.	—	50	—	
T_{ST}	Start-up Time	Output valid time after V_{DD} meets minimum specified level.		—	5	—	ms
t_R	Output Rise Time	LVDS.	20% – 80%, 156.25MHz	—	303	400	ps
		LVPECL.		—	292	400	
		HCSL.		—	310	400	
		CML		—	304	400	
t_F	Output Fall Time	LVDS.	80% – 20%, 156.25MHz	—	282	400	ps
		LVPECL.		—	278	400	
		HCSL.		—	288	400	
		CML		—	281	400	
O_{DC}	Output Clock Duty Cycle	LVDS.	156.25MHz	48	—	52	%
		LVPECL.	156.25MHz	48	—	52	
		HCSL.	156.25MHz	48	—	52	
		CML	156.25MHz	48	—	52	
T_{OE}	Output Enable/Disable Time	—	—	—	1	—	ms

Table 17. 1.8V AC Electrical Characteristics

V_{DD} = 1.8V ±5%, T_A = -40°C to +85°C, -40°C to +105°C.

Symbol	Parameter	Test Condition		Minimum	Typical	Maximum	Units
F	Output Frequency Range	LVDS, LVPECL, CML.		15	—	2100	MHz
		HCSL.		15	—	725	
	Frequency Stability	Temperature = -40°C to +85°C.		—	—	±25	ppm
		Temperature = -40°C to +105°C.		—	—	±50	ppm
	Frequency Tolerance (25°C)	Temperature = 25°C.		—	—	±15	ppm
	Aging (1st year)	T_A = 25°C.		—	—	±3	ppm
	Aging (10 years)	T_A = 25°C.		—	—	±10	ppm
	Output Load	LVDS.	Differential.	—	100	—	Ω
		LVPECL, HCSL.	To GND.	—	50	—	
T_{ST}	Start-up Time	Output valid time after V_{DD} meets minimum specified level.		—	5	—	ms
t_R	Output Rise Time	LVDS.	20% – 80%, 156.25MHz	—	311	450	ps
		LVPECL.		—	312	450	
		HCSL.		—	316	450	
		CML		—	313	450	
t_F	Output Fall Time	LVDS.	80% – 20%, 156.25MHz	—	290	450	ps
		LVPECL.		—	297	450	
		HCSL.		—	294	450	
		CML		—	289	450	
O_{DC}	Output Clock Duty Cycle	LVDS.	156.25MHz	48	—	52	%
		LVPECL.	156.25MHz	48	—	52	
		HCSL.	156.25MHz	48	—	52	
		CML	156.25MHz	48	—	52	
T_{OE}	Output Enable/Disable Time	—	—	—	1	—	ms

Table 18. Phase Jitter Characteristics

V_{DD} = 3.3V, 2.5V, 1.8V ±5%, T_A = -40°C to +85°C, -40°C to +105°C.

Symbol	Parameter	Conditions	Minimum	Typical	Maximum	Units
f_{JITTER}	Phase Jitter (12kHz – 20MHz)	250.00MHz	—	115	—	fsec
		312.50MHz	—	125	—	fsec
		625.00MHz	—	123	—	fsec
		644.53MHz	—	120	—	fsec

Output Waveforms

Figure 3. LVDS/LVPECL/HCSL/CML Output Waveforms

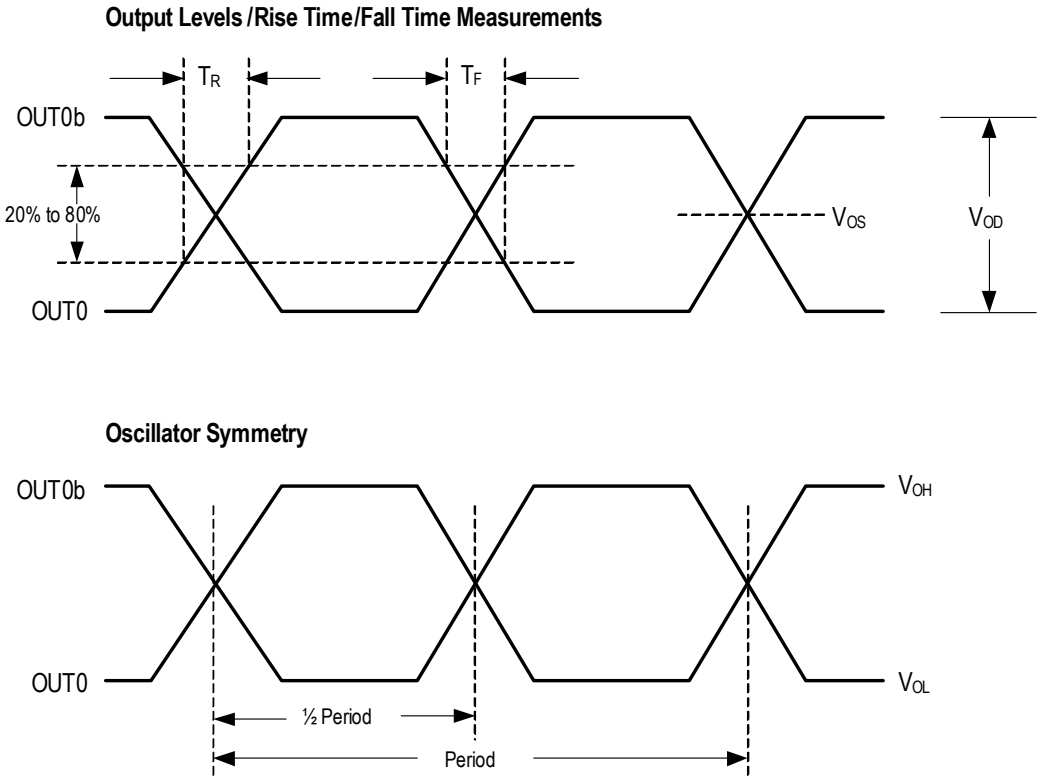

Termination for 3.3V LVPECL Outputs

The clock layout topology shown below is a typical termination for LVPECL outputs. The two different layouts mentioned are recommended only as guidelines.

The differential output is a low impedance follower output that generate ECL/LVPECL compatible outputs. Therefore, terminating resistors (DC current path to ground) or current sources must be used for functionality. These outputs are designed to drive 50Ω transmission lines. Matched impedance techniques should be used to maximize operating frequency and minimize signal distortion. Figure 4 and Figure 5 show two different layouts which are recommended only as guidelines. Other suitable clock layouts may exist and it would be recommended that the board designers simulate to guarantee compatibility across all printed circuit and clock component process variations.

Figure 4. 3.3V LVPECL Output Termination

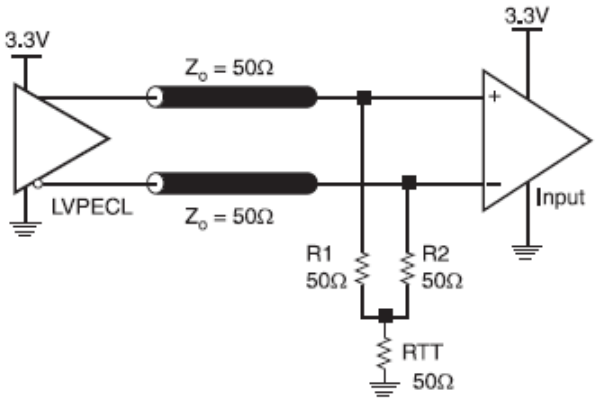

Figure 5. 3.3V LVPECL Output Termination

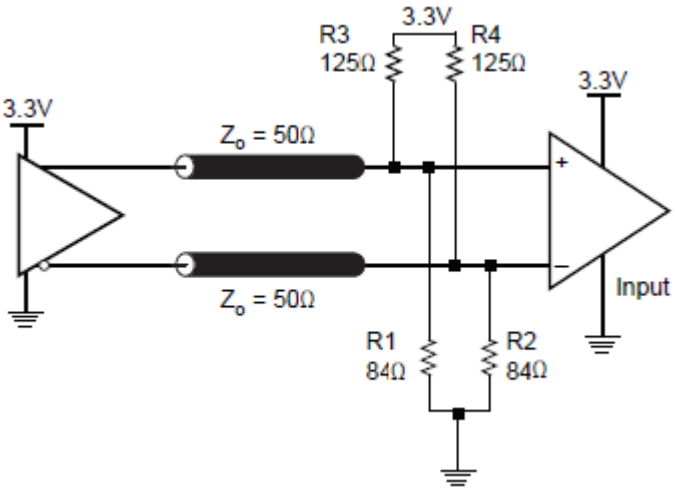

Termination for 2.5V LVPECL Outputs

Figure 6 and Figure 7 show examples of termination for 2.5V LVPECL driver. These terminations are equivalent to terminating 50Ω to V_{CCO} – 2V. For V_{CCO} = 2.5V, the V_{CCO} – 2V is very close to ground level. The R3 in Figure 8 can be eliminated and the termination is shown in Figure 7.

Figure 6. 2.5V LVPECL Driver Termination Example

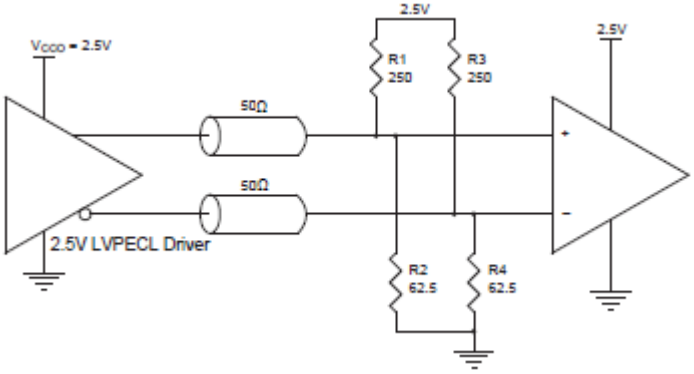

Figure 7. 2.5V LVPECL Driver Termination Example

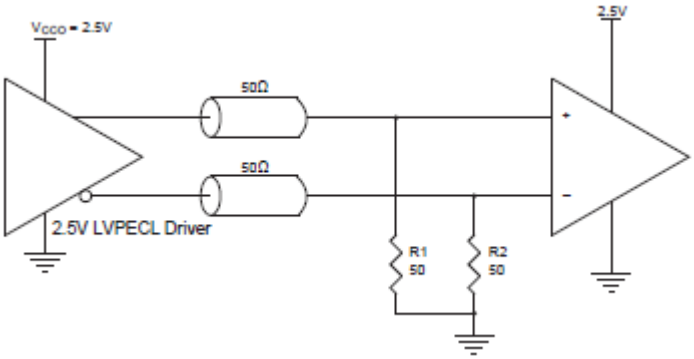

Figure 8. 2.5V LVPECL Driver Termination Example

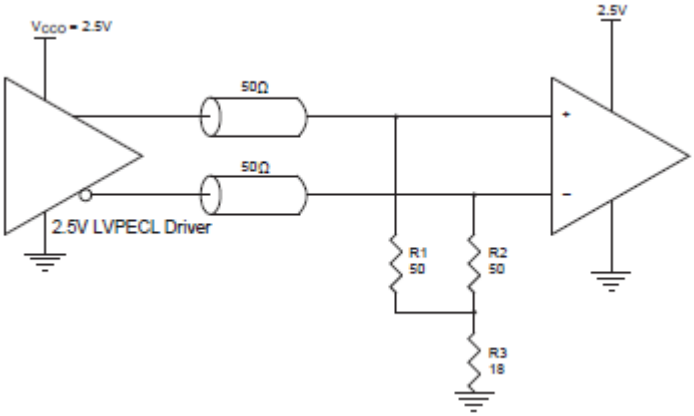

LVDS Driver Termination

For a general LVDS interface, the recommended value for the termination impedance (Z_T) is between 90Ω and 132Ω. The actual value should be selected to match the differential impedance (Z_0) of your transmission line. A typical point-to-point LVDS design uses a 100Ω parallel resistor at the receiver and a 100Ω differential transmission-line environment. In order to avoid any transmission-line reflection issues, the components should be surface mounted and must be placed as close to the receiver as possible. Renesas offers a full line of LVDS compliant devices with two types of output structures: current source and voltage source.

The standard termination schematic as shown in Figure 9 can be used with either type of output structure. Figure 10, which can also be used with both output types, is an optional termination with center tap capacitance to help filter common mode noise. The capacitor value should be approximately 50pF. If using a non-standard termination, it is recommended to contact Renesas and confirm if the output structure is current source or voltage source type. In addition, since these outputs are LVDS compatible, the input receiver's amplitude and common-mode input range should be verified for compatibility with the output.

Figure 9. Standard LVDS Termination

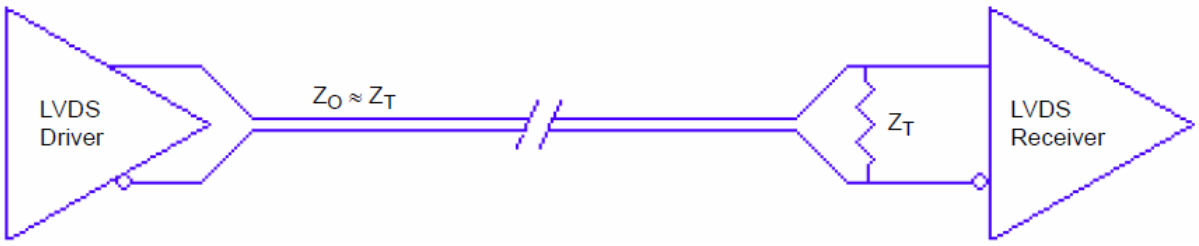

Figure 10. Optional LVDS Termination

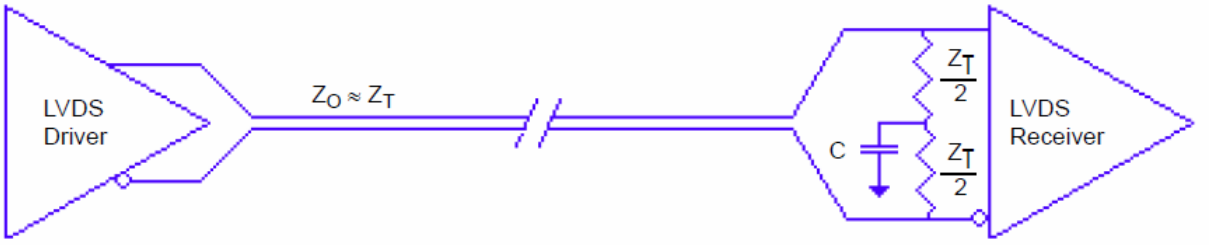

Recommended Termination for HCSL Outputs

Figure 11 is the recommended source termination for applications where the driver and receiver will be on a separate PCBs. This termination is the standard for PCI Express™ and HCSL output types. All traces should be 50Ω impedance single-ended or 100Ω differential. Figure 12 is the recommended termination for applications where a point-to-point connection can be used. A point-to-point connection contains both the driver and the receiver on the same PCB. With a matched termination at the receiver, transmission-line reflections will be minimized. In addition, a series resistor (Rs) at the driver offers flexibility and can help dampen unwanted reflections. The optional resistor can range from 0Ω to 33Ω. All traces should be 50Ω impedance single-ended or 100Ω differential.

Figure 11. Recommended Source Termination (where the driver and receiver will be on separate PCBs)

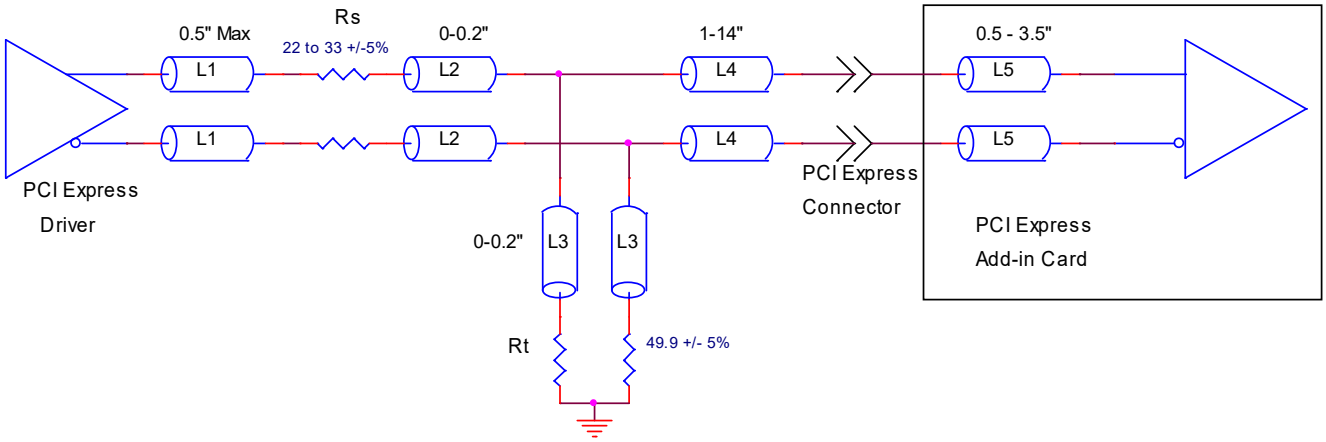

Figure 12. Recommended Termination (where a point-to-point connection can be used)

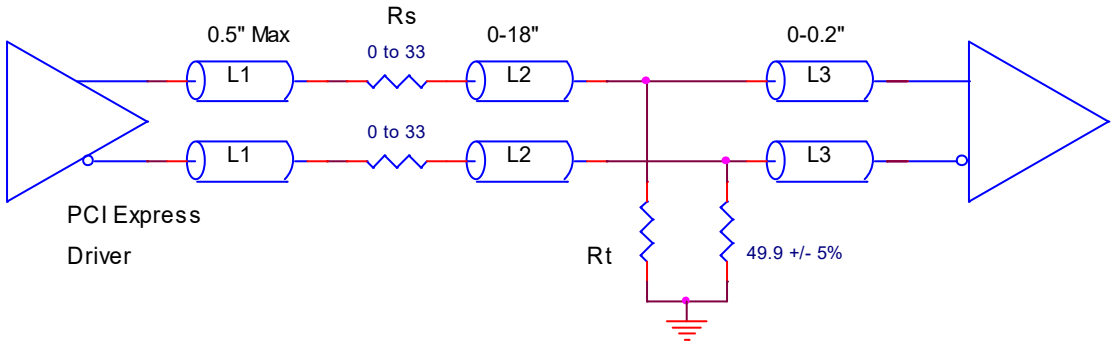

CML Termination

Figure 13 shows an example of the termination for a CML driver. In this example, the transmission line characteristic impedance is 50Ω. The R1 and R2 50Ω matched load terminations are pulled up to VDDO. The matched loads are located close to the receiver.

Figure 13. CML Termination Example

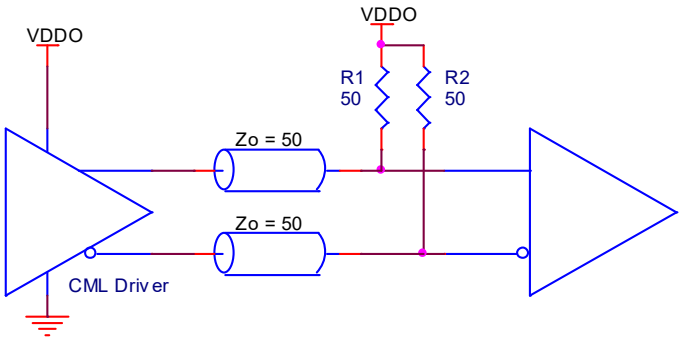

Package Outline Drawings

The package outline drawings are located at the end of this document and are accessible from the links below. The package information is the most current data available and is subject to change without revision of this document.

2.5 × 2.0 mm package (NJG12)

3.2 × 2.5 mm package (LNG8)

5.0 × 3.2 mm package (LXG8)

Marking Diagrams

Marking Configuration for the 2.5 × 2.0 mm (NJG12) Package

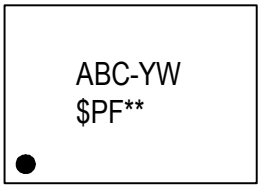

- Line 1 indicates the following:
  - "ABC" denotes the truncated first three digits of the frequency code (e.g., 156).
  - "-YW" denotes the last digit of the year and week when the part was assembled.
- Line 2 indicates the following:
  - "$" denotes the mark location code.
  - "PF" denotes the package and frequency codes, where "P" = package code and "F" = frequency code.
  - "**" denotes the sequential lot number.

Figure 14. Marking Configuration for the 3.2 × 2.5 mm (LNG8) Package (example based on XFL336156.250000I)

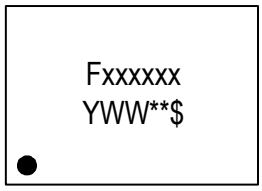

- Line 1 denotes the truncated part number as follows:
  - "F" = a combination of the 3rd digit (output type, e.g. "**L**") and the 5th digit (voltage supply, e.g. "**3**"), in accordance with the mapping key as follows:
    - C1 = A, C2 = B, C3 = C, L1 = D, L2 = E, **L3 = F**, N1 = G, N2 = H, N3 = J, P1 = K, P2 = L, P3 = M
  - "xxxxxx" = the first three digits to the left of the decimal point and the last three digits to the left of the decimal point as shown in the above example. This number will vary depending upon the frequency value selected in the orderable part number. (e.g. 156250)).
- Line 2 indicates the following:
  - "YWW" denotes the last digit of the year and week when the part was assembled.
  - "**" denotes the sequential lot number.
  - "$" denotes the mark location.

Figure 15. Marking Configuration for the 5.0 × 3.2 mm (LXG8) Package (example based on XFL526125.000000I)



- Line 1 indicates the following:
  - XF = family; "L" = output type; "526" = package, voltage, precision
- Line 2 indicates the following:
  - "125000" = the first three digits to the left of the decimal point and the last three digits to the left of the decimal point as shown in the above example. This number will vary depending upon the frequency value selected in the orderable part number.
- Line 3 indicates the following:
  - "YYWW" denotes the last digits of the year and week when the part was assembled.
  - "**" denotes the sequential lot number.

Revision History

Revision Date	Description of Change
February 10, 2022	▪ Updated Output Clock Duty Cycle minimum and maximum specifications for LVDS, LVPECL, HCSL, and CML in Table 15, Table 16, and Table 17.
July 13, 2021	▪ Update Ordering Information (XO) key (precision specification).
May 10, 2021	▪ Updated Package and Precision codes in VCXO Ordering Information table. ▪ Moved XO and VCXO Ordering Information tables to follow Pin Descriptions. ▪ Updated VCXO Precision options from H, J, and K to X, Y, and Z, updated VCXO bandwidth values.
March 31, 2021	▪ Updated title of Ordering Information table to include (XO). ▪ Added a new Ordering Information table for (VCXO). ▪ Updated Frequency Tolerance values.
February 11, 2021	Added new package options: 5.0 × 3.2 mm and 3.2 × 2.5 mm.
January 6, 2020	Updated notes for pin descriptions.
July 22, 2019	Updated LVDS Differential Output Voltage minimum value from 0.28V to 0.30V.
May 22, 2019	Changed 3.3V, 2.5V, and 1.8V LVPECL current consumption conditions value from 670MHz to 2.1GHz.
April 3, 2019	Initial release.

DATE CREATED	REVISIONS		
	REV	DESCRIPTION	AUTHOR
11/15/17	00	INITIAL RELEASE	JH
NOTE: REFER TO DCP FOR OFFICIAL RELEASE DATE			

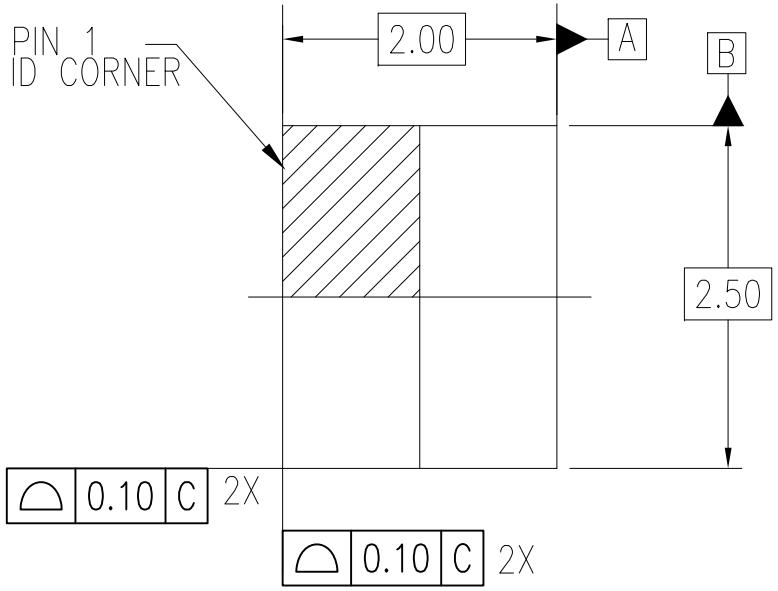

TOP VIEW

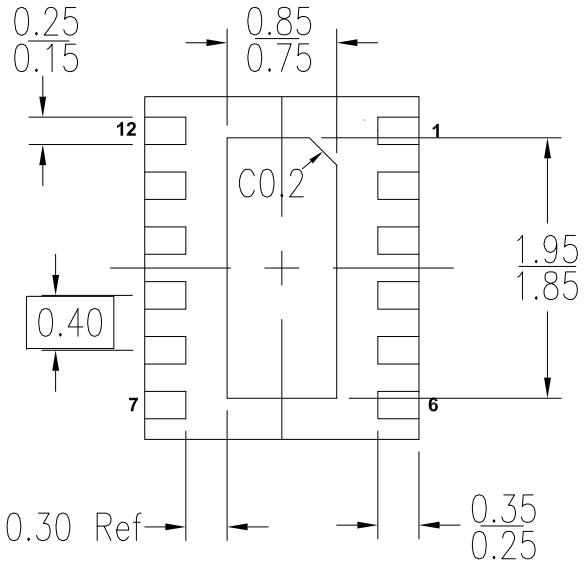

BOTTOM VIEW

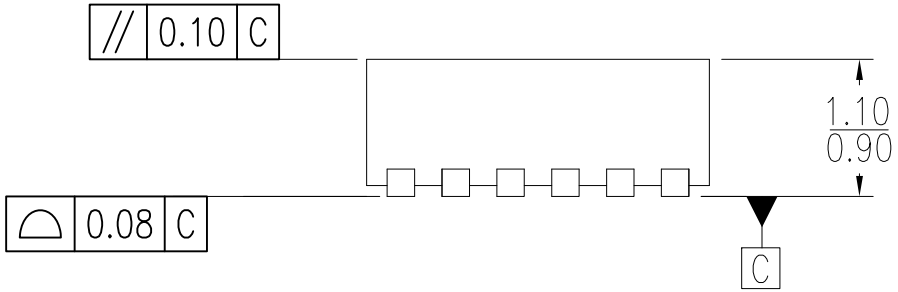

SIDE VIEW (ROTATE 90 Deg.)

NOTE:
1. DIMENSIONING AND TOLERANCING CONFORM TO ASME Y14.5-2009.
2. ALL DIMENSIONS ARE IN MILLIMETERS.

TOLERANCES UNLESS SPECIFIED DECIMAL ANGULAR X± .1 ±1° XX± .05 XXX± .030	IDT™ www.IDT.com	6024 Silver Creek Valley Road San Jose CA 95138 PHONE: (408) 284-8200 FAX: (408) 284-3572
	TITLE: NJG12 Package Outline Drawing 2.00 x 2.50 x 1.00 mm Body Epad 0.80 x 1.90 mm. 0.40mm Pitch DFN	
	SIZE: C DRAWING No.: PSC-4736 REV: 00	
	DO NOT SCALE DRAWING	SHEET 1 OF 2

DATE CREATED	REVISIONS		
	REV	DESCRIPTION	AUTHOR
11/15/17	00	INITIAL RELEASE	JH
NOTE: REFER TO DCP FOR OFFICIAL RELEASE DATE			

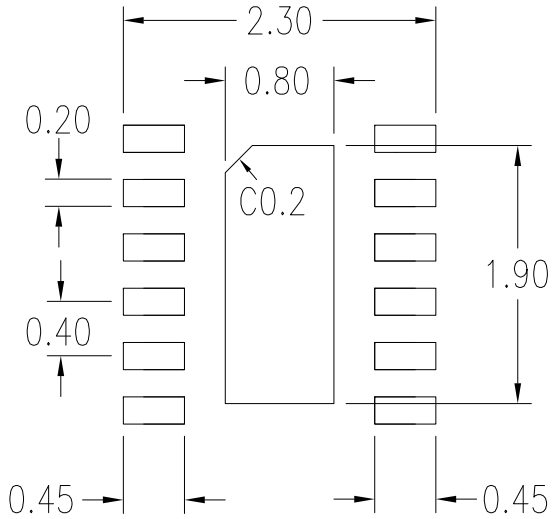

RECOMMENDED LAND PATTERN

NOTES:

1. ALL DIMENSIONS ARE IN mm. ANGLES IN DEGREES.
2. TOP DOWN VIEW. AS VIEWED ON PCB.
3. LAND PATTERN RECOMMENDATION PER IPC-7351B GENERIC REQUIREMENT FOR SURFACE MOUNT DESIGN AND LAND PATTERN.

TOLERANCES UNLESS SPECIFIED DECIMAL ANGULAR X± .1 ±1° XX± .05 XXX± .030	IDT™ www.IDT.com	6024 Silver Creek Valley Road San Jose CA 95138 PHONE: (408) 284-8200 FAX: (408) 284-3572
	TITLE: NJG12 Package Outline Drawing 2.00 x 2.50 x 1.00 mm Body Epad 0.80 x 1.90 mm. 0.40mm Pitch DFN	
	SIZE: C DRAWING No.: PSC-4736 REV: 00	
	DO NOT SCALE DRAWING	SHEET 2 OF 2

8-LGA, Package Outline Drawing

2.50 x 3.20 x 0.85 mm Body, 1.25mm Pitch

LNG8D1, PSC-4837-01, Rev 01, Page 1

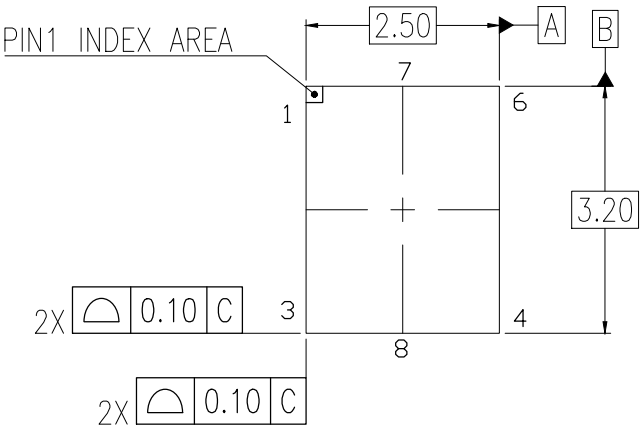

TOP VIEW

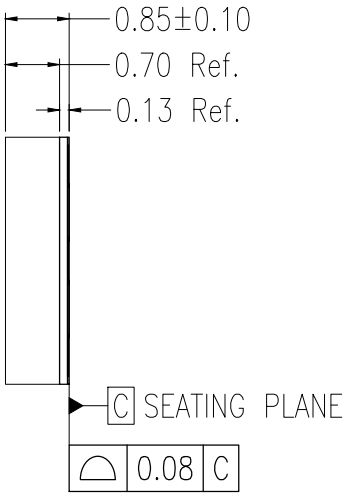

SIDE VIEW

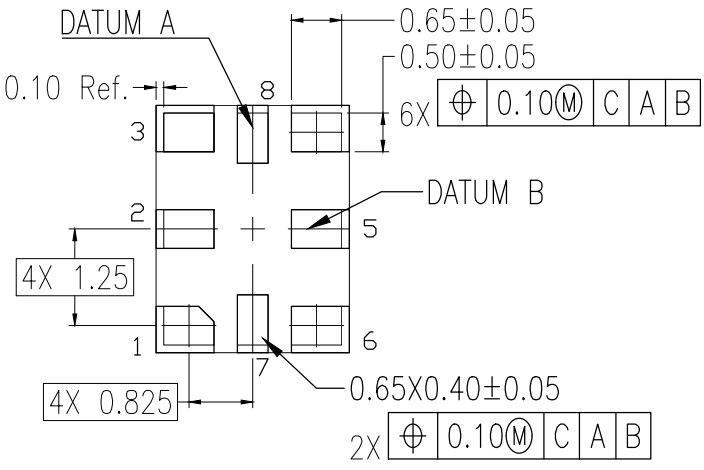

BOTTOM VIEW

NOTES:

1. DIMENSIONING AND TOLERANCING CONFORM TO ASME Y14.5–2009
2. ALL DIMENSIONS ARE IN MILLIMETERS

© Renesas Electronics Corporation

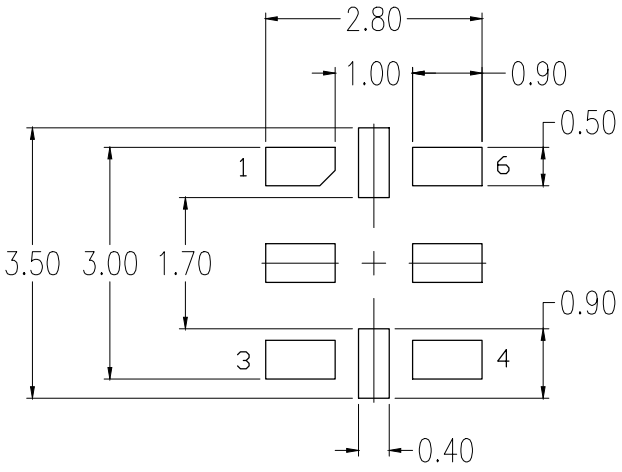

RECOMMENDED LAND PATTERN DIMENSION

NOTES:
1. ALL DIMENSIONS ARE IN MM. ANGLES IN DEGREES
2. TOP DOWN VIEW. AS VIEWED ON PCB
3. LAND PATTERN RECOMMENDATION PER IPC-7351B GENERIC REQUIREMENT FOR SURFACE MOUNT DESIGN AND LAND PATTERN
4. NSMD PATTERN ASSUMED

Package Revision History		
Date Created	Rev No.	Description
Nov. 12, 2019	00	Initial Release
Jun. 21, 2021	01	Update to Renesas Logo

© Renesas Electronics Corporation

8-LGA, Package Outline Drawing

5.0 x 3.2 x 0.85 mm Body,1.27mm Pitch

LXG8D1, PSC-4857-01, Rev 00, Page 1

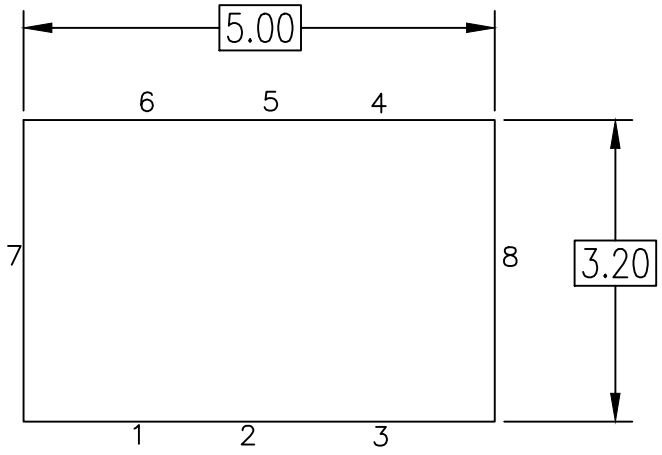

TOP VIEW

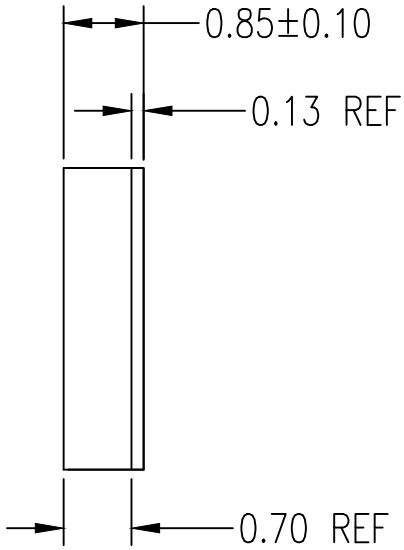

SIDE VIEW

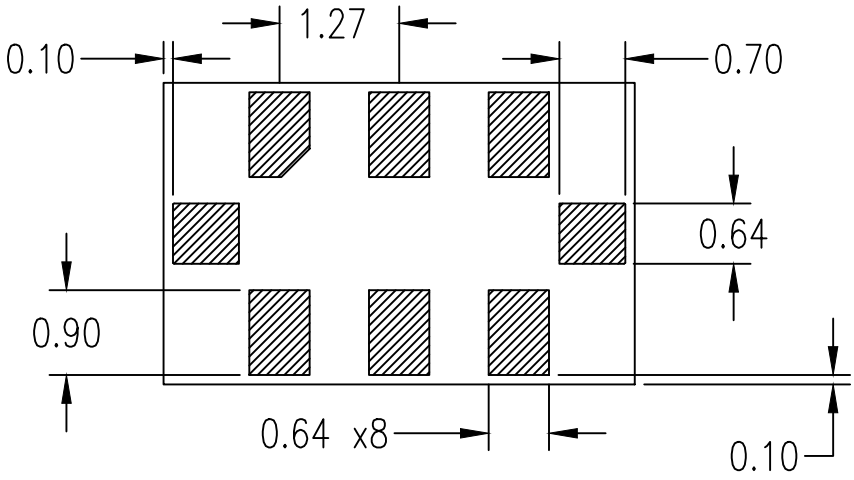

BOTTOM VIEW

NOTES:

1. ALL DIMENSIONS IN MM.

© Renesas Electronics Corporation

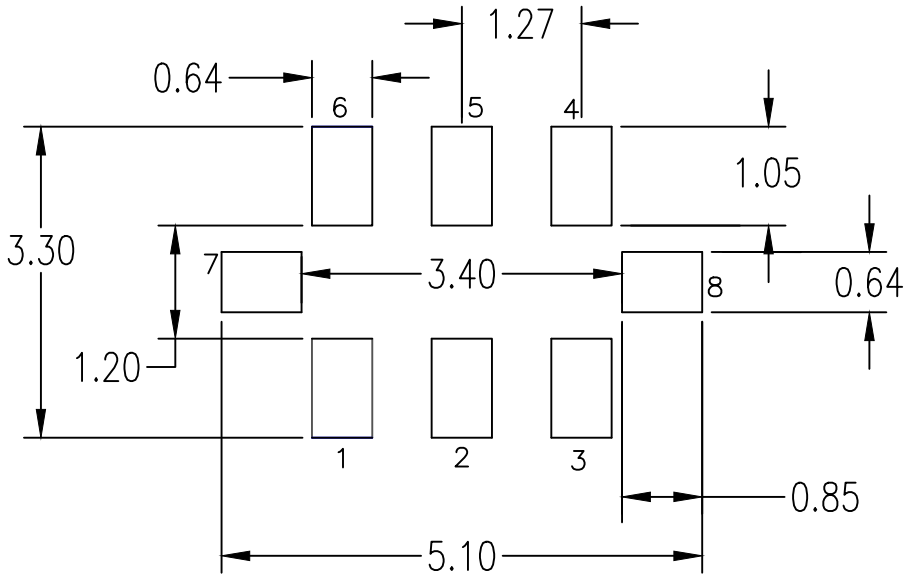

RECOMMENDED LAND PATTERN DIMENSION

NOTES:

1. ALL DIMENSION ARE IN MM. ANGLES IN DEGREES.
2. LAND PATTERN RECOMMENDATION PER IPC-7351B GENERIC REQUIREMENT FOR SURFACE MOUNT DESIGN AND LAND PATTERN.

Package Revision History		
Date Created	Rev No.	Description
April 22, 2020	00	Initial Release

© Renesas Electronics Corporation

IMPORTANT NOTICE AND DISCLAIMER

RENESAS ELECTRONICS CORPORATION AND ITS SUBSIDIARIES (“RENESAS”) PROVIDES TECHNICAL SPECIFICATIONS AND RELIABILITY DATA (INCLUDING DATASHEETS), DESIGN RESOURCES (INCLUDING REFERENCE DESIGNS), APPLICATION OR OTHER DESIGN ADVICE, WEB TOOLS, SAFETY INFORMATION, AND OTHER RESOURCES “AS IS” AND WITH ALL FAULTS, AND DISCLAIMS ALL WARRANTIES, EXPRESS OR IMPLIED, INCLUDING, WITHOUT LIMITATION, ANY IMPLIED WARRANTIES OF MERCHANTABILITY, FITNESS FOR A PARTICULAR PURPOSE, OR NON-INFRINGEMENT OF THIRD PARTY INTELLECTUAL PROPERTY RIGHTS.

These resources are intended for developers skilled in the art designing with Renesas products. You are solely responsible for (1) selecting the appropriate products for your application, (2) designing, validating, and testing your application, and (3) ensuring your application meets applicable standards, and any other safety, security, or other requirements. These resources are subject to change without notice. Renesas grants you permission to use these resources only for development of an application that uses Renesas products. Other reproduction or use of these resources is strictly prohibited. No license is granted to any other Renesas intellectual property or to any third party intellectual property. Renesas disclaims responsibility for, and you will fully indemnify Renesas and its representatives against, any claims, damages, costs, losses, or liabilities arising out of your use of these resources. Renesas' products are provided only subject to Renesas' Terms and Conditions of Sale or other applicable terms agreed to in writing. No use of any Renesas resources expands or otherwise alters any applicable warranties or warranty disclaimers for these products.

(Rev.1.0 Mar 2020)

Corporate Headquarters

TOYOSU FORESIA, 3-2-24 Toyosu,
Koto-ku, Tokyo 135-0061, Japan
www.renesas.com

Contact Information

For further information on a product, technology, the most up-to-date version of a document, or your nearest sales office, please visit:
www.renesas.com/contact/

Trademarks

Renesas and the Renesas logo are trademarks of Renesas Electronics Corporation. All trademarks and registered trademarks are the property of their respective owners.

© 2020 Renesas Electronics Corporation. All rights reserved.