AMIS-42670

High-Speed CAN Transceiver for Long Networks

ON Semiconductor®

http://onsemi.com

Description

The AMIS−42670 CAN transceiver is the interface between a controller area network (CAN) protocol controller and the physical bus and may be used in both 12 V and 24 V systems. The transceiver provides differential transmit capability to the bus and differential receive capability to the CAN controller. Due to the wide common−mode voltage range of the receiver inputs, the AMIS−42670 is able to reach outstanding levels of electromagnetic susceptibility (EMS). Similarly, extremely low electromagnetic emission (EME) is achieved by the excellent matching of the output signals.

The AMIS−42670 is the industrial version of the AMIS−30660 and primarily intended for applications where long network lengths are mandatory. Examples are elevators, in−building networks, process control and trains. To cope with the long bus delay the communication speed needs to be low. AMIS−42670 allows low transmit data rates down 10 kbit/s or lower.

Features

- Fully Compatible with the ISO 11898−2 Standard
- Certified “Authentication on CAN Transceiver Conformance (d1.1)”
- Wide Range of Bus Communication Speed (0 Mbit/s up to 1 Mbit/s)
- Allows Low Transmit Data Rate in Networks Exceeding 1 km
- Ideally Suited for 12 V and 24 V Industrial and Automotive Applications
- Low Electromagnetic Emission (EME) Common−Mode Choke is No Longer Required
- Differential Receiver with Wide Common−Mode Range (± 35 V) for High EMS
- No Disturbance of the Bus Lines with an Unpowered Node
- Thermal Protection
- Bus Pins Protected Against Transients
- Silent Mode in which the Transmitter is Disabled
- Short Circuit Proof to Supply Voltage and Ground
- Logic Level Inputs Compatible with 3.3 V Devices
- These are Pb−Free Devices*

*For additional information on our Pb−Free strategy and soldering details, please download the ON Semiconductor Soldering and Mounting Techniques Reference Manual, SOLDERRM/D.

PIN ASSIGNMENT

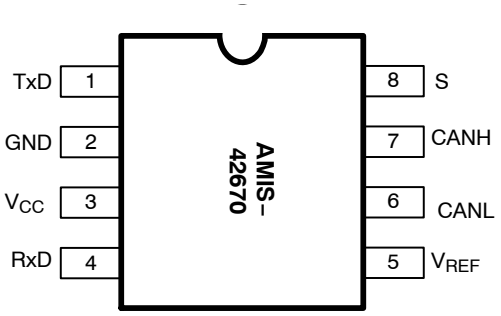

PC20041204.3

(Top View)

ORDERING INFORMATION

See detailed ordering and shipping information in the package dimensions section on page 9 of this data sheet.

© Semiconductor Components Industries, LLC, 2009

Table 1. TECHNICAL CHARACTERISTICS

Symbol	Parameter	Condition	Max	Max	Unit
V_{CANH}	DC Voltage at Pin CANH	0 < V_{CC} < 5.25 V; no time limit	−45	+45	V
V_{CANL}	DC Voltage at Pin CANL	0 < V_{CC} < 5.25 V; no time limit	−45	+45	V
$V_{o(dif)(bus_dom)}$	Differential Bus Output Voltage in Dominant State	42.5 Ω < R_{LT} < 60 Ω	1.5	3	V
$t_{pd(rec-dom)}$	Propagation Delay TxD to RxD	See Figure 6	70	245	ns
$t_{pd(dom-rec)}$	Propagation Delay TxD to RxD	See Figure 6	100	245	ns
$C_{M-range}$	Input Common−Mode Range for Comparator	Guaranteed Differential Receiver Threshold and Leakage Current	−35	+35	V
$V_{CM-peak}$	Common−Mode Peak	See Figures 7 and 8 (Note 1)	−500	500	mV
$V_{CM-step}$	Common−Mode Step	See Figures 7 and 8 (Note 1)	−150	150	mV

1. The parameters $V_{CM-peak}$ and $V_{CM-step}$ guarantee low electromagnetic emission.

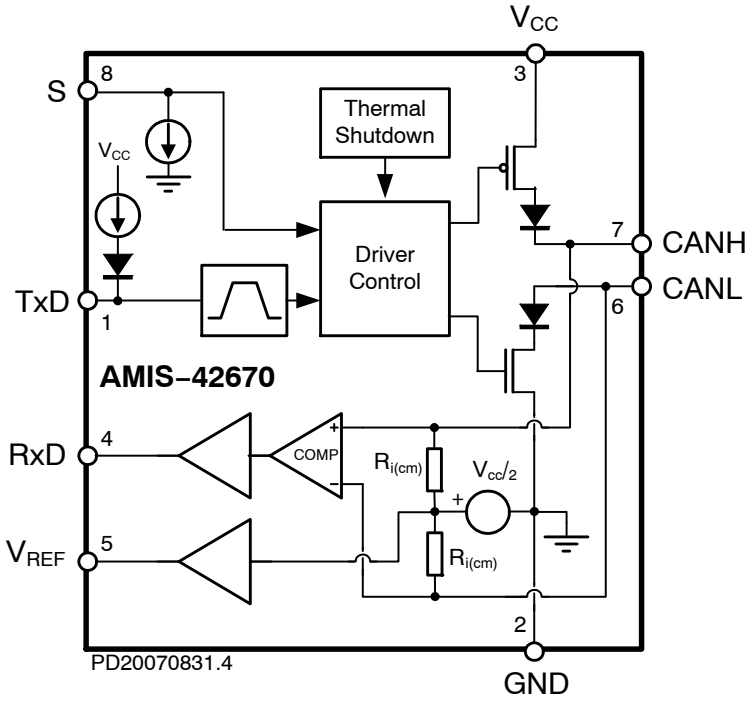

Figure 1. Block Diagram

Table 2. PIN DESCRIPTION

Pin	Name	Description
1	TxD	Transmit Data Input; Low Input → Dominant Driver; Internal Pullup Current
2	GND	Ground
3	V_{CC}	Supply Voltage
4	RxD	Receive Data Output; Dominant Transmitter → Low Output
5	V_{REF}	Reference Voltage Output
6	CANL	Low−Level CAN Bus Line (Low in Dominant Mode)
7	CANH	High−Level CAN Bus Line (High in Dominant Mode)
8	S	Silent Mode Control Input; Internal Pulldown Current

Table 3. ABSOLUTE MAXIMUM RATINGS

Symbol	Parameter	Conditions	Min.	Max.	Unit
V_{CC}	Supply Voltage		−0.3	+7	V
V_{CANH}	DC Voltage at Pin CANH	0 < V_{CC} < 5.25 V; no time limit	−45	+45	V
V_{CANL}	DC Voltage at Pin CANL	0 < V_{CC} < 5.25 V; no time limit	−45	+45	V
V_{TxD}	DC Voltage at Pin TxD		−0.3	V_{CC} + 0.3	V
V_{RxD}	DC Voltage at Pin RxD		−0.3	V_{CC} + 0.3	V
V_S	DC Voltage at Pin S		−0.3	V_{CC} + 0.3	V
V_{REF}	DC Voltage at Pin V_{REF}		−0.3	V_{CC} + 0.3	V
$V_{tran(CANH)}$	Transient Voltage at Pin CANH	Note 2	−150	+150	V
$V_{tran(CANL)}$	Transient Voltage at Pin CANL	Note 2	−150	+150	V
V_{esd}	Electrostatic Discharge Voltage at All Pins	Note 3 Note 5	−4 −750	+4 +750	kV V
Latch−up	Static Latch−up at All Pins	Note 4		100	mA
T_{stg}	Storage Temperature		−55	+155	°C
T_A	Ambient Temperature		−40	+125	°C
T_J	Maximum Junction Temperature		−40	+150	°C

Stresses exceeding Maximum Ratings may damage the device. Maximum Ratings are stress ratings only. Functional operation above the Recommended Operating Conditions is not implied. Extended exposure to stresses above the Recommended Operating Conditions may affect device reliability.

2. Applied transient waveforms in accordance with ISO 7637 part 3, test pulses 1, 2, 3a, and 3b (see Figure 3).
3. Standardized human body model ESD pulses in accordance to MIL883 method 3015.7.
4. Static latch−up immunity: static latch−up protection level when tested according to EIA/JESD78.
5. Standardized charged device model ESD pulses when tested according to EOS/ESD DS5.3−1993.

Table 4. THERMAL CHARACTERISTICS

Symbol	Parameter	Conditions	Value	Unit
$R_{th(vj-a)}$	Thermal Resistance from Junction−to−Ambient in SOIC−8 Package	In Free Air	150	k/W
$R_{th(vj-s)}$	Thermal Resistance from Junction−to−Substrate of Bare Die	In Free Air	45	k/W

APPLICATION INFORMATION

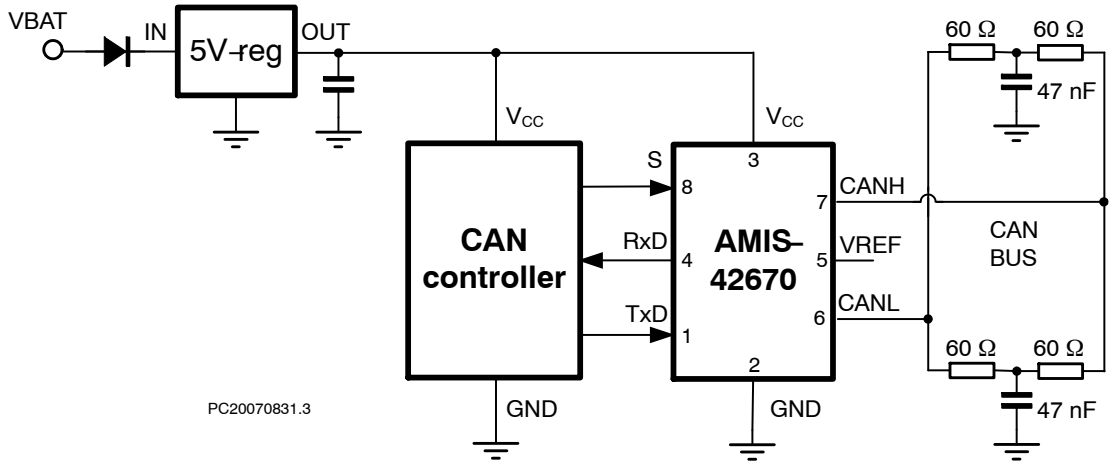

Figure 2. Application Diagram

FUNCTIONAL DESCRIPTION

Operating Modes

The behavior of AMIS−42670 under various conditions is illustrated in Table 3 below. In case the device is powered, one of two operating modes can be selected through Pin S.

Table 5. FUNCTIONAL TABLE OF AMIS−42670; x = don't care

VCC	Pin TxD	Pin S	Pin CANH	Pin CANL	Bus State	Pin RxD
4.75 V to 5.25 V	0	0 (or Floating)	High	Low	Dominant	0
4.75 V to 5.25 V	x	1	$V_{CC}/2$	$V_{CC}/2$	Recessive	1
4.75 V to 5.25 V	1 (or Floating)	X	$V_{CC}/2$	$V_{CC}/2$	Recessive	1
V_{CC} < PORL (Unpowered)	x	X	0 V < CANH < V_{CC}	0 V < CANL < V_{CC}	Recessive	1
PORL < V_{CC} < 4.75 V	> 2 V	X	0 V < CANH < V_{CC}	0 V < CANL < V_{CC}	Recessive	1

High−Speed Mode

If Pin S is pulled low (or left floating), the transceiver is in its high−speed mode and is able to communicate via the bus lines. The signals are transmitted and received to the CAN controller via the Pins TxD and RxD. The slopes on the bus line outputs are optimized to give extremely low electromagnetic emissions.

Silent Mode

In silent mode, the transmitter is disabled. All other IC functions continue to operate. The silent mode is selected by connecting Pin S to V_{CC} and can be used to prevent network communication from being blocked, due to a CAN controller which is out of control.

Over−temperature Detection

A thermal protection circuit protects the IC from damage by switching off the transmitter if the junction temperature exceeds a value of approximately 160°C. Because the transmitter dissipates most of the power, the power dissipation and temperature of the IC is reduced. All other IC functions continue to operate. The transmitter off−state resets when Pin TxD goes high. The thermal protection circuit is particularly necessary when a bus line short−circuits.

High Communication Speed Range

The transceiver is primarily intended for industrial applications. It allows very low baud rates needed for long bus length applications. But also high speed communication is possible up to 1 Mbit/s.

Fail−Safe Features

A current−limiting circuit protects the transmitter output stage from damage caused by an accidental short−circuit to either positive or negative supply voltage, although power dissipation increases during this fault condition.

The pins CANH and CANL are protected from automotive electrical transients (according to "ISO 7637"; see Figure 3). Pin TxD is pulled high internally should the input become disconnected.

ELECTRICAL CHARACTERISTICS

Definitions

All voltages are referenced to GND (Pin 2). Positive currents flow into the IC. Sinking current means the current is flowing into the pin; sourcing current means the current is flowing out of the pin.

Table 6. DC CHARACTERISTICS V_{CC} = 4.75 V to 5.25 V, T_A = −40°C to +150°C; R_{LT} = 60 Ω unless specified otherwise.

Symbol	Parameter	Conditions	Min	Typ	Max	Unit
SUPPLY (Pin V_{CC})						
I_{CC}	Supply Current	Dominant; V_{TXD} = 0V Recessive; V_{TXD} = V_{CC}	25 2	45 4	65 8	mA
TRANSMITTER DATA INPUT (Pin TxD)						
V_{IH}	High−Level Input Voltage	Output Recessive	2.0	−	V_{CC} + 0.3	V
V_{IL}	Low−Level Input Voltage	Output Dominant	−0.3	−	+0.8	V
I_{IH}	High−Level Input Current	V_{TxD} = V_{CC}	−1	0	+1	μA
I_{IL}	Low−Level Input Current	V_{TxD} = 0 V	−75	−200	−350	μA
C_i	Input Capacitance	Not Tested	−	5	10	pF
MODE SELECT (Pin S)						
V_{IH}	High−Level Input Voltage	Silent Mode	2.0	−	V_{CC} + 0.3	V
V_{IL}	Low−Level Input Voltage	High−Speed Mode	−0.3	−	+0.8	V
I_{IH}	High−Level Input Current	V_S = 2 V	20	30	50	μA
I_{IL}	Low−Level Input Current	V_S = 0.8 V	15	30	45	μA
RECEIVER DATA OUTPUT (Pin RxD)						
V_{OH}	High−Level Output Voltage	I_{RXD} = −10 mA	0.6 x V_{CC}	0.75 x V_{CC}		V
V_{OL}	Low−Level Output Voltage	I_{RXD} = 6 mA		0.25	0.45	V
REFERENCE VOLTAGE OUTPUT (Pin V_{REF})						
V_{REF}	Reference Output Voltage	−50 μA < I_{VREF} < +50 μA	0.45 x V_{CC}	0.50 x V_{CC}	0.55 x V_{CC}	V
V_{REF_CM}	Reference Output Voltage for Full Common Mode Range	−35 V < V_{CANH} < +35 V; −35 V < V_{CANL} < +35 V	0.40 x V_{CC}	0.50 x V_{CC}	0.60 x V_{CC}	V
BUS LINES (Pins CANH and CANL)						
$V_{o(reces)(CANH)}$	Recessive Bus Voltage at Pin CANH	V_{TxD} = V_{CC}; No Load	2.0	2.5	3.0	V
$V_{o(reces)(CANL)}$	Recessive Bus Voltage at Pin CANL	V_{TxD} = V_{CC}; No Load	2.0	2.5	3.0	V
$I_{o(reces)(CANH)}$	Recessive Output Current at Pin CANH	−35 V < V_{CANH} < +35 V; 0 V < V_{CC} < 5.25 V	−2.5	−	+2.5	mA
$I_{o(reces)(CANL)}$	Recessive Output Current at Pin CANL	−35 V <V_{CANL} < +35 V; 0 V <V_{CC} < 5.25 V	−2.5	−	+2.5	mA
$V_{o(dom)(CANH)}$	Dominant Output Voltage at Pin CANH	V_{TxD} = 0 V	3.0	3.6	4.25	V
$V_{o(dom)(CANL)}$	Dominant Output Voltage at Pin CANL	V_{TxD} = 0 V	0. 5	1.4	1.75	V
$V_{o(dif)(bus)}$	Differential Bus Output Voltage (V_{CANH} − V_{CANL})	V_{TxD} = 0 V; Dominant; 42.5 Ω < R_{LT} < 60 Ω	1.5	2.25	3.0	V
		V_{TxD} = V_{CC}; Recessive; No Load	−120	0	+50	mV
$I_{o(sc)(CANH)}$	Short Circuit Output Current at Pin CANH	V_{CANH} = 0 V; V_{TxD} = 0 V	−45	−70	−95	mA
$I_{o(sc)(CANL)}$	Short Circuit Output Current at Pin CANL	V_{CANL} = 36 V; V_{TxD} = 0 V	45	70	120	mA

Table 6. DC CHARACTERISTICS V_{CC} = 4.75 V to 5.25 V, T_A = −40°C to +150°C; R_{LT} = 60 Ω unless specified otherwise.

Symbol	Parameter	Conditions	Min	Typ	Max	Unit
BUS LINES (Pins CANH and CANL)						
$V_{i(dif)(th)}$	Differential Receiver Threshold Voltage	−5 V < V_{CANL} < +10 V; −5 V < V_{CANH} < +10 V; See Figure 4	0.5	0.7	0.9	V
$V_{ihcm(dif)(th)}$	Differential Receiver Threshold Voltage for High Common−Mode	−35 V < V_{CANL} < +35 V; −35 V < V_{CANH} < +35 V; See Figure 4	0.25	0.7	1.05	V
$V_{i(dif)(hys)}$	Differential Receiver Input Voltage Hysteresis	−5 V < V_{CANL} < +10 V; −5 V < V_{CANH} < +10 V; See Figure 4	50	70	100	mV
$R_{i(cm)(CANH)}$	Common−Mode Input Resistance at Pin CANH		15	25	37	kΩ
$R_{i(cm)(CANL)}$	Common−Mode Input Resistance at Pin CANL		15	25	37	kΩ
$R_{i(cm)(m)}$	Matching Between Pin CANH and Pin CANL Common−Mode Input Resistance	V_{CANH} = V_{CANL}	−3	0	+3	%
$R_{i(dif)}$	Differential Input Resistance		25	50	75	kΩ
$R_{i(cm)(m)}$	Matching Between Pin CANH and Pin CANL Common−Mode Input Resistance	V_{CANH} = V_{CANL}	−3	0	+3	%
$R_{i(dif)}$	Differential Input Resistance		25	50	75	kΩ
$C_{i(CANH)}$	Input Capacitance at Pin CANH	V_{TxD} = V_{CC}; Not Tested		7.5	20	pF
$C_{i(CANL)}$	Input Capacitance at Pin CANL	V_{TxD} = V_{CC}; Not Tested		7.5	20	pF
$C_{i(dif)}$	Differential Input capacitance	V_{TxD} = V_{CC}; Not Tested		3.75	10	pF
$I_{LI(CANH)}$	Input Leakage Current at Pin CANH	V_{CC} = 0 V; V_{CANH} = 5 V	10	170	250	μA
$I_{LI(CANL)}$	Input Leakage Current at Pin CANL	V_{CC} = 0 V; V_{CANL} = 5 V	10	170	250	μA
$V_{CM-peak}$	Common−Mode Peak During Transition from Dom → Rec or Rec → Dom	See Figures 7 and 8	−500		500	mV
$V_{CM-step}$	Difference in Common−Mode Between Dominant and Recessive State	See Figures 7 and 8	−150		150	mV
POWER−ON−RESET (POR)						
PORL	POR Level	CANH, CANL, V_{ref} in Tri−State Below POR Level	2.2	3.5	4.7	V
THERMAL SHUTDOWN						
$T_{J(sd)}$	Shutdown Junction Temperature		150	160	180	°C
TIMING CHARACTERISTICS (see Figures 5 and 6)						
$t_{d(TxD-BUSon)}$	Delay TxD to Bus Active	V_s = 0 V	40	85	130	ns
$t_{d(TxD-BUSoff)}$	Delay TxD to Bus Inactive	V_s = 0 V	30	60	105	ns
$t_{d(BUSon-RxD)}$	Delay Bus Active to RxD	V_s = 0 V	25	55	105	ns
$t_{d(BUSoff-RxD)}$	Delay Bus Inactive to RxD	V_s = 0 V	65	100	135	ns
$t_{pd(rec-dom)}$	Propagation delay TxD to RxD from Recessive to Dominant	V_s = 0 V	70		245	ns
$t_{d(dom-rec)}$	Propagation Delay TxD to RxD from Dominant to Recessive	V_s = 0 V	100		245	ns

MEASUREMENT SETUPS AND DEFINITIONS

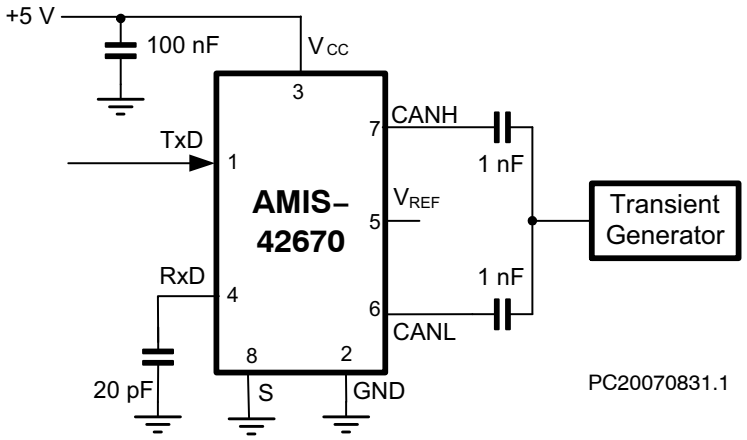

Figure 3. Test Circuit for Transients

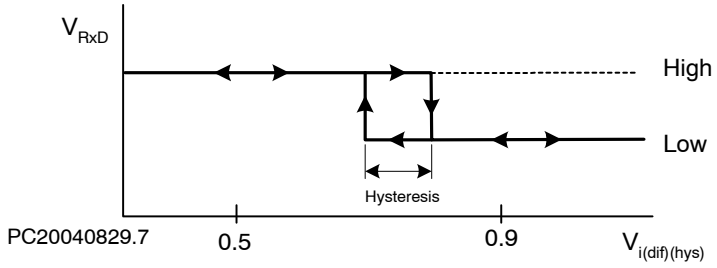

Figure 4. Hysteresis of the Receiver

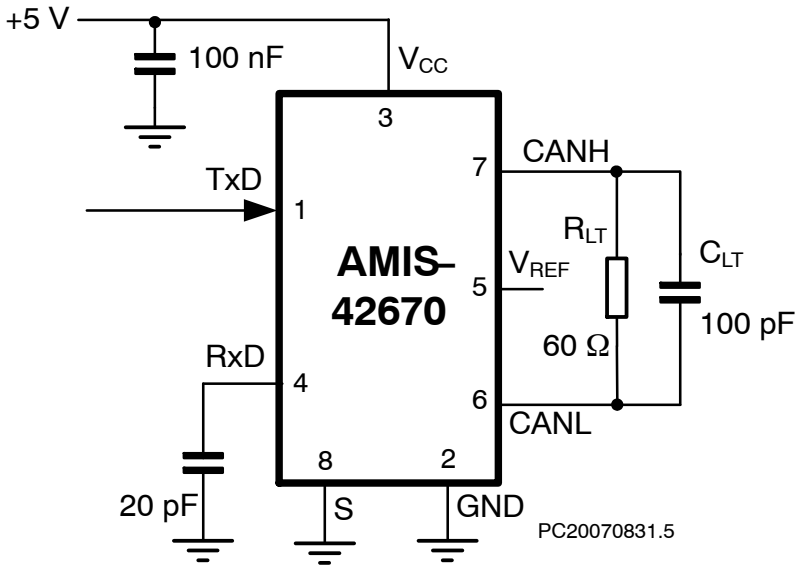

Figure 5. Test Circuit for Timing Characteristics

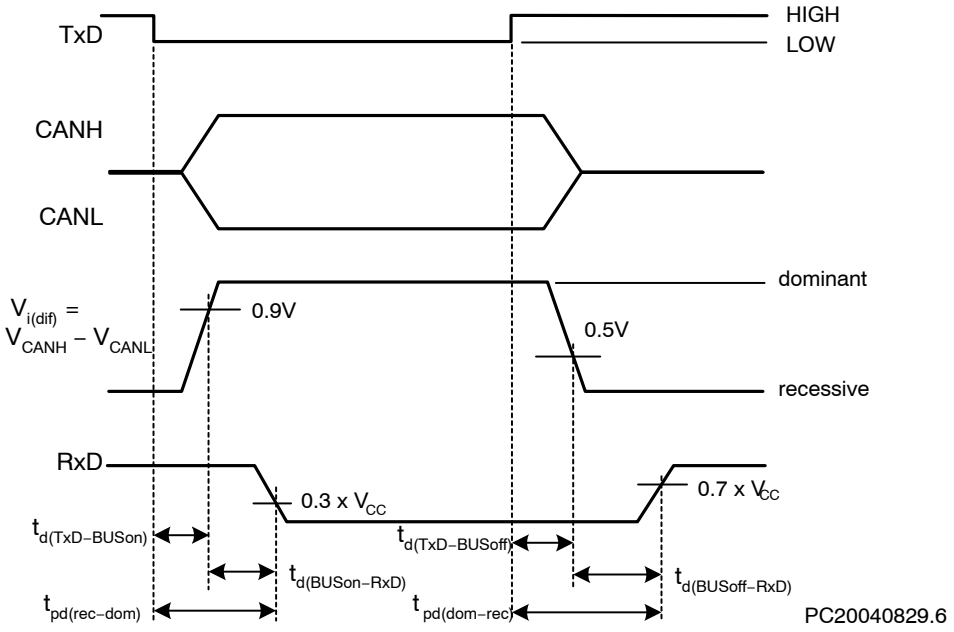

Figure 6. : Timing Diagram for AC Characteristics

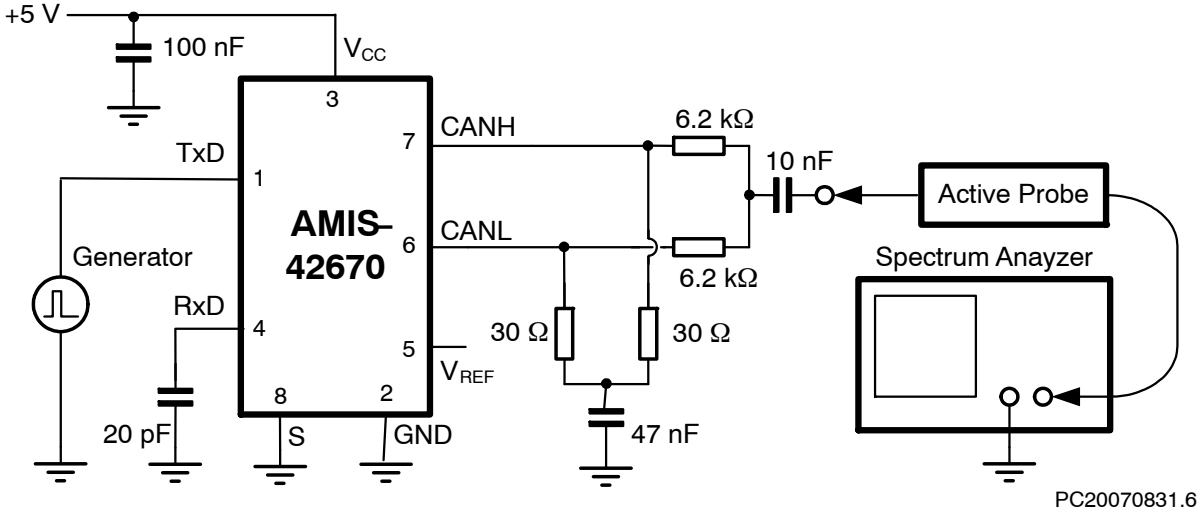

Figure 7. Basic Test Setup for Electromagnetic Measurement

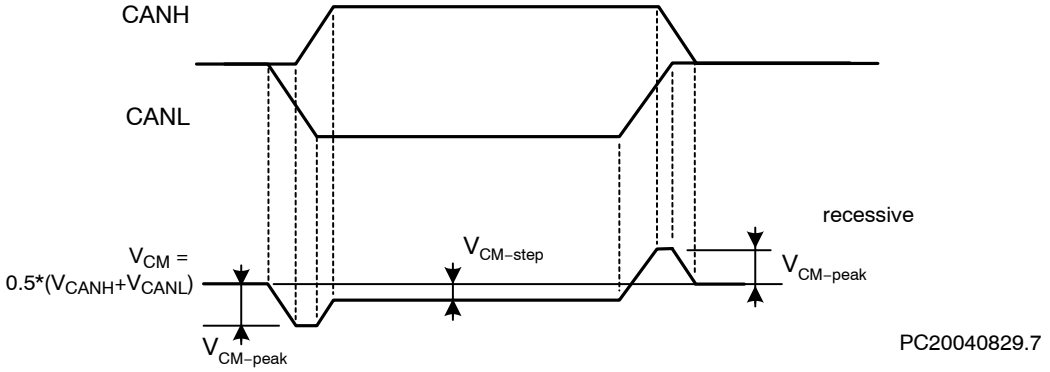

Figure 8. Common−Mode Voltage Peaks (See Measurement Setup Figure 7)

DEVICE ORDERING INFORMATION

Part Number	Temperature Range	Package Type	Shipping†
AMIS42670ICAH2G	−40°C − 125°C	SOIC−8 (Pb−Free)	96 Tube / Tray
AMIS42670ICAH2RG	−40°C − 125°C	SOIC−8 (Pb−Free)	3000 / Tape & Reel

†For information on tape and reel specifications, including part orientation and tape sizes, please refer to our Tape and Reel Packaging Specifications Brochure, BRD8011/D.

MECHANICAL CASE OUTLINE
PACKAGE DIMENSIONS

ON Semiconductor®



SCALE 1:1

SOIC−8
CASE 751AZ
ISSUE B

DATE 18 MAY 2015

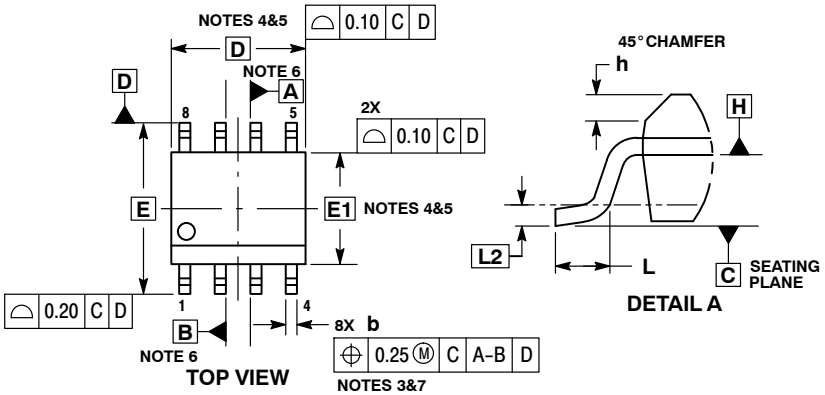

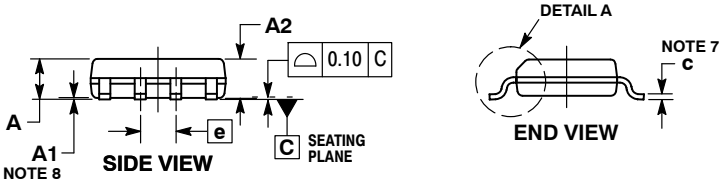

NOTES:
1. DIMENSIONING AND TOLERANCING PER ASME Y14.5M, 1994.
2. CONTROLLING DIMENSION: MILLIMETERS.
3. DIMENSION b DOES NOT INCLUDE DAMBAR PROTRUSION. ALLOWABLE PROTRUSION SHALL BE 0.004 mm IN EXCESS OF MAXIMUM MATERIAL CONDITION.
4. DIMENSION D DOES NOT INCLUDE MOLD FLASH, PROTRUSIONS OR GATE BURRS. MOLD FLASH, PROTRUSIONS OR GATE BURRS SHALL NOT EXCEED 0.006 mm PER SIDE. DIMENSION E1 DOES NOT INCLUDE INTERLEAD FLASH OR PROTRUSION. INTERLEAD FLASH OR PROTRUSION SHALL NOT EXCEED 0.010 mm PER SIDE.
5. THE PACKAGE TOP MAY BE SMALLER THAN THE PACKAGE BOTTOM. DIMENSIONS D AND E1 ARE DETERMINED AT THE OUTERMOST EXTREMES OF THE PLASTIC BODY AT DATUM H.
6. DIMENSIONS A AND B ARE TO BE DETERMINED AT DATUM H.
7. DIMENSIONS b AND c APPLY TO THE FLAT SECTION OF THE LEAD BETWEEN 0.10 TO 0.25 FROM THE LEAD TIP.
8. A1 IS DEFINED AS THE VERTICAL DISTANCE FROM THE SEATING PLANE TO THE LOWEST POINT ON THE PACKAGE BODY.

	MILLIMETERS	
DIM	MIN	MAX
A	---	1.75
A1	0.10	0.25
A2	1.25	---
b	0.31	0.51
c	0.10	0.25
D	4.90 BSC	
E	6.00 BSC	
E1	3.90 BSC	
e	1.27 BSC	
h	0.25	0.41
L	0.40	1.27
L2	0.25 BSC	

RECOMMENDED SOLDERING FOOTPRINT*

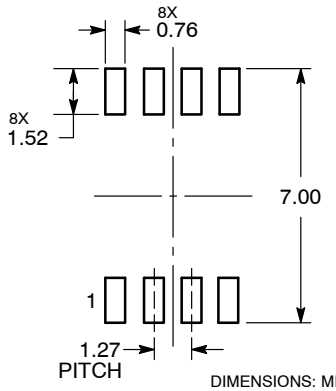

DIMENSIONS: MILLIMETERS

*For additional information on our Pb−Free strategy and soldering details, please download the ON Semiconductor Soldering and Mounting Techniques Reference Manual, SOLDERRM/D.

GENERIC MARKING DIAGRAM*

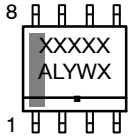

XXXXX = Specific Device Code
A = Assembly Location
L = Wafer Lot
Y = Year
W = Work Week
▪ = Pb−Free Package

*This information is generic. Please refer to device data sheet for actual part marking. Pb−Free indicator, “G”, may or not be present.

DOCUMENT NUMBER:	**98AON34918E**	Electronic versions are uncontrolled except when accessed directly from the Document Repository. Printed versions are uncontrolled except when stamped “CONTROLLED COPY” in red.
DESCRIPTION:	**SOIC−8**	**PAGE 1 OF 1**

ON Semiconductor and ON are trademarks of Semiconductor Components Industries, LLC dba ON Semiconductor or its subsidiaries in the United States and/or other countries. ON Semiconductor reserves the right to make changes without further notice to any products herein. ON Semiconductor makes no warranty, representation or guarantee regarding the suitability of its products for any particular purpose, nor does ON Semiconductor assume any liability arising out of the application or use of any product or circuit, and specifically disclaims any and all liability, including without limitation special, consequential or incidental damages. ON Semiconductor does not convey any license under its patent rights nor the rights of others.

© Semiconductor Components Industries, LLC, 2019

onsemi, ONSEMI , and other names, marks, and brands are registered and/or common law trademarks of Semiconductor Components Industries, LLC dba "**onsemi**" or its affiliates and/or subsidiaries in the United States and/or other countries. **onsemi** owns the rights to a number of patents, trademarks, copyrights, trade secrets, and other intellectual property. A listing of **onsemi**'s product/patent coverage may be accessed at www.onsemi.com/site/pdf/Patent−Marking.pdf. **onsemi** reserves the right to make changes at any time to any products or information herein, without notice. The information herein is provided "as−is" and **onsemi** makes no warranty, representation or guarantee regarding the accuracy of the information, product features, availability, functionality, or suitability of its products for any particular purpose, nor does **onsemi** assume any liability arising out of the application or use of any product or circuit, and specifically disclaims any and all liability, including without limitation special, consequential or incidental damages. Buyer is responsible for its products and applications using **onsemi** products, including compliance with all laws, regulations and safety requirements or standards, regardless of any support or applications information provided by **onsemi**. "Typical" parameters which may be provided in **onsemi** data sheets and/or specifications can and do vary in different applications and actual performance may vary over time. All operating parameters, including "Typicals" must be validated for each customer application by customer's technical experts. **onsemi** does not convey any license under any of its intellectual property rights nor the rights of others. **onsemi** products are not designed, intended, or authorized for use as a critical component in life support systems or any FDA Class 3 medical devices or medical devices with a same or similar classification in a foreign jurisdiction or any devices intended for implantation in the human body. Should Buyer purchase or use **onsemi** products for any such unintended or unauthorized application, Buyer shall indemnify and hold **onsemi** and its officers, employees, subsidiaries, affiliates, and distributors harmless against all claims, costs, damages, and expenses, and reasonable attorney fees arising out of, directly or indirectly, any claim of personal injury or death associated with such unintended or unauthorized use, even if such claim alleges that **onsemi** was negligent regarding the design or manufacture of the part. **onsemi** is an Equal Opportunity/Affirmative Action Employer. This literature is subject to all applicable copyright laws and is not for resale in any manner.

PUBLICATION ORDERING INFORMATION

LITERATURE FULFILLMENT:
Email Requests to: orderlit@onsemi.com

onsemi Website: www.onsemi.com

TECHNICAL SUPPORT
North American Technical Support:
Voice Mail: 1 800−282−9855 Toll Free USA/Canada
Phone: 011 421 33 790 2910

Europe, Middle East and Africa Technical Support:
Phone: 00421 33 790 2910
For additional information, please contact your local Sales Representative

◊