BGM210L Wireless Gecko Bluetooth® Lighting Module Data Sheet

The BGM210L is a module designed and built to meet the performance, security, and reliability requirements of line-powered, smart LED lighting products.

Based on the EFR32BG21 Gecko SoC, it enables Bluetooth 5.1 and Bluetooth Mesh connectivity delivering best-in-class RF performance, CA Title 20 energy consumption compliance, future-proof capability for feature and OTA firmware updates, enhanced security, and a form factor and temperature rating suited for enclosed operation in lightbulb housings.

The BGM210L is a complete solution that comes with fully-upgradeable, robust software stacks, world-wide regulatory certifications, advanced development and debugging tools, and support that will simplify and minimize the development cycle of your product helping to accelerate its time-to-market.

The BGM210L is targeted for key applications that include:

- Smart LED lightbulbs
- Connected lighting

KEY FEATURES

- Bluetooth 5.1 and Bluetooth Mesh connectivity
- PCB Trace antenna
- +12.5 dBm Max TX power
- -97 dBm Bluetooth RX sensitivity @ 1 Mbps
- 32-bit ARM Cortex-M33 core at 38.4 MHz
- 1024/96 kB of flash/RAM memory
- Enhanced security features
- Optimal set of MCU peripherals
- 12 GPIO pins
- -40 to (105 or 125)°C
- 15.5 mm x 22.5 mm (custom form factor)

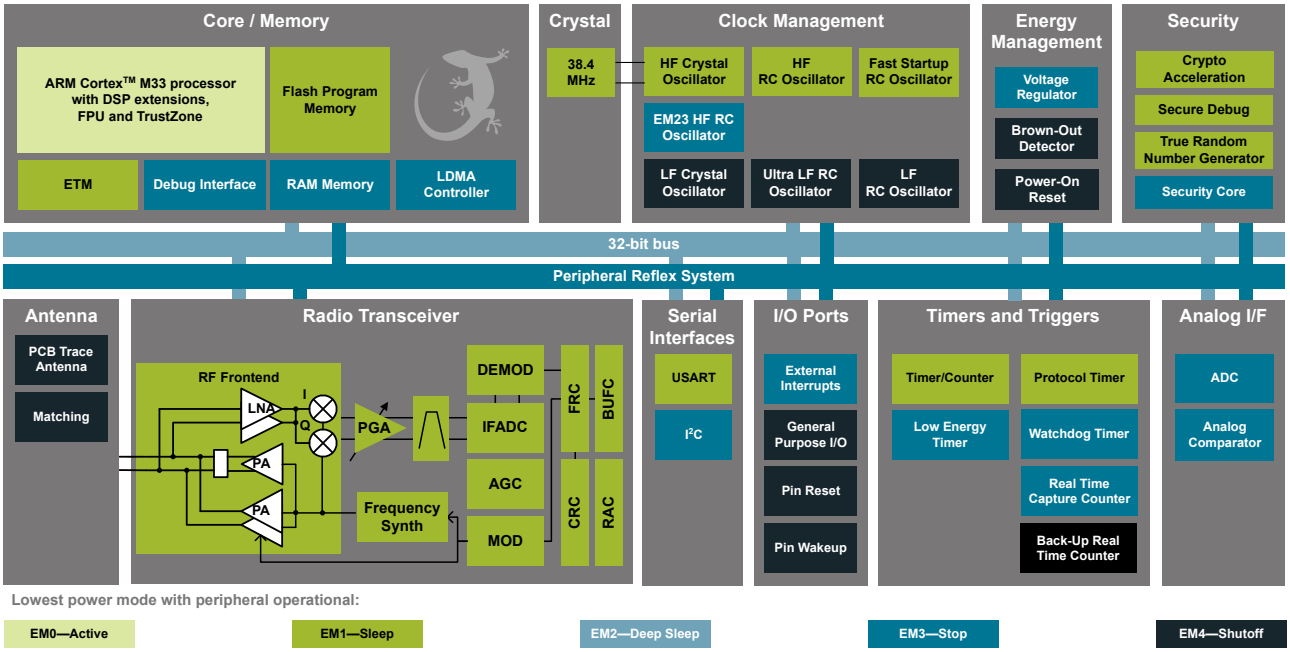

 Copyright © 2021 by Silicon Laboratories

1. Features

- **Supported Protocols**
  - Bluetooth 5.1
    - AoA/AoD
  - Bluetooth Mesh
- **Wireless System-on-Chip**
  - 2.4 GHz radio
  - TX power up to +12.5 dBm
  - 32-bit ARM Cortex®-M33 with DSP instruction and floating-point unit for efficient signal processing
  - 1024 kB flash program memory
  - 96 kB RAM data memory
  - Embedded Trace Macrocell (ETM) for advanced debugging
- **Receiver Performance**
  - -104.4 dBm sensitivity (0.1% BER) at 125 kbps GFSK
  - -100.1 dBm sensitivity (0.1% BER) at 500 kbps GFSK
  - -97 dBm sensitivity (0.1% BER) at 1 Mbps GFSK
  - -93.9 dBm sensitivity (0.1% BER) at 2 Mbps GFSK
- **Current Consumption**
  - 9.3 mA RX current at 1 Mbps GFSK
  - 70 mA TX current at +12.5 dBm output power
  - 50.9 µA/MHz in Active Mode (EM0)
  - 5.1 µA EM2 DeepSleep current (RTCC running from LFXO, Bluetooth Stack not running)
  - 8.5 µA EM2 DeepSleep current (RTCC running from LFXO, Bluetooth Stack running)
- **Regulatory Certifications**
  - CE, UKCA, Serbia
  - ISED, FCC, Dominican Republic
  - Japan, South Korea, Taiwan
  - China, Hong Kong, Singapore, Thailand, Australia
  - Bahrain, Israel, Jordan, Qatar, UAE, Saudi Arabia
  - Egypt, Morocco
- **Operating Range**
  - 1.8 to 3.8 V
  - -40 to +105 °C or -40 to +125 °C
- **Dimensions**
  - 15.5 mm x 22.5 mm (custom form factor)
- **Security**
  - Secure Boot with Root of Trust and Secure Loader (RTSL)[1]
  - Hardware Cryptographic Acceleration with DPA counter-measures[1] for AES128/256, SHA-1, SHA-2 (up to 256-bit), ECC (up to 256-bit), ECDSA, and ECDH
  - True Random Number Generator (TRNG) compliant with NIST SP800-90 and AIS-31
  - ARM® TrustZone®
  - Secure Debug Interface lock/unlock
- **MCU Peripherals**
  - 12-bit 1 Msps SAR Analog to Digital Converter (ADC)
  - 2 × Analog Comparator (ACMP)
  - 12 General Purpose I/O pins with output state retention and asynchronous interrupts
  - 8 Channel DMA Controller
  - 12 Channel Peripheral Reflex System (PRS)
  - 3 × 16-bit Timer/Counter
    (3 Compare/Capture/PWM channels)
  - 1 × 32-bit Timer/Counter
    (3 Compare/Capture/PWM channels)
  - 32-bit Real Time Counter
  - 24-bit Low Energy Timer for waveform generation
  - 2 × Watchdog Timer
  - 3 × Universal Synchronous/Asynchronous Receiver/Transmitter (UART/SPI/SmartCard (ISO 7816)/IrDA/I^2S)
  - 2 × I^2C interface with SMBus support

1. With Secure Element (SE) firmware v1.1.2 or newer

2. Ordering Information

Table 2.1. Ordering Information

Ordering Code	Protocol Stack	Max TX Power	Freq Band	Antenna	Flash (kB)	RAM (kB)	GPIO	Temp Range	Packaging
BGM210LA22JIF2	Bluetooth 5.1	12.5 dBm	2.4 GHz	Inverted-F PCB Trace	1024	96	12	-40 to 125 °C	Cut Tape
BGM210LA22JIF2R	Bluetooth 5.1	12.5 dBm	2.4 GHz	Inverted-F PCB Trace	1024	96	12	-40 to 125 °C	Reel
BGM210LA22JNF2	Bluetooth 5.1	12.5 dBm	2.4 GHz	Inverted-F PCB Trace	1024	96	12	-40 to 105 °C	Cut Tape
BGM210LA22JNF2R	Bluetooth 5.1	12.5 dBm	2.4 GHz	Inverted-F PCB Trace	1024	96	12	-40 to 105 °C	Reel

End-product manufacturers must verify that the module is configured to meet regulatory limits for each region in accordance with the formal certification test reports.

BGM210L modules are pre-programmed with BGAPI UART DFU bootloader.

SLWRB4309B radio board is available for BGM210L evaluation and development.

The modules may be referred to by their product family name (BGM210L), model name (BGM210L22F) or full ordering code throughout this document.

Table of Contents

1. Features . . . 2

2. Ordering Information . . . 3

3. System Overview . . . 6

3.1 Block Diagram . . . 6

3.2 EFR32BG21 SoC . . . 6

3.3 Antenna . . . 6

3.4 Power Supply . . . 6

4. Electrical Specifications . . . 7

4.1 Electrical Characteristics . . . 7

4.1.1 Absolute Maximum Ratings . . . 7

4.1.2 General Operating Conditions . . . 8

4.1.3 MCU Current Consumption at 3.0V . . . 9

4.1.4 Radio Current Consumption at 3.0V . . . 10

4.1.5 RF Transmitter General Characteristics for the 2.4 GHz Band . . . 11

4.1.6 RF Receiver General Characteristics for the 2.4 GHz Band . . . 11

4.1.7 RF Receiver Characteristics for Bluetooth Low Energy at 1 Mbps . . . 12

4.1.8 RF Receiver Characteristics for Bluetooth Low Energy at 2 Mbps . . . 13

4.1.9 RF Receiver Characteristics for Bluetooth Low Energy at 500 kbps . . . 14

4.1.10 RF Receiver Characteristics for Bluetooth Low Energy at 125 kbps . . . 15

4.1.11 High-Frequency Crystal . . . 16

4.1.12 GPIO Pins . . . 17

4.1.13 Microcontroller Peripherals . . . 18

4.2 Typical Performance Curves . . . 18

4.2.1 Antenna Radiation and Efficiency . . . 19

5. Reference Diagrams . . . 20

6. Pin Definitions . . . 21

6.1 Module Pinout . . . 21

6.2 Alternate Pin Functions . . . 22

6.3 Analog Peripheral Connectivity . . . 22

6.4 Digital Peripheral Connectivity . . . 23

7. Design Guidelines . . . 26

7.1 Module Placement . . . 26

7.2 Antenna Optimization . . . 27

7.3 Reset . . . 27

7.4 Debug . . . 27

7.5 Packet Trace Interface (PTI) . . . 28

8. Package Specifications . . . 29

8.1 Package Outline . . . 29

8.2 PCB Land Pattern 30
8.3 Marking 31
9. Soldering Recommendations 32
10. Tape and Reel 33
11. Certifications 34
11.1 CE and UKCA 34
11.2 FCC 35
11.3 ISED Canada 36
11.4 Australia & New Zealand 37
11.5 Dominican Republic 37
11.6 Hong Kong 38
11.7 Israel 38
11.8 Jordan 38
11.9 Serbia 38
11.10 Singapore 38
11.11 Kingdom of Bahrain 38
11.12 China 38
11.13 Egypt 38
11.14 Japan 39
11.15 KC South Korea 39
11.16 Morocco 39
11.17 Qatar 39
11.18 Thailand 40
11.19 NCC Taiwan 40
11.20 UAE 40
11.21 Saudi Arabia 40
11.22 Bluetooth Qualification 41
12. Revision History 42

3. System Overview

3.1 Block Diagram

The BGM210L module is a highly-integrated, high-performance system with all the hardware components needed to enable 2.4 GHz wireless connectivity and support robust networking capabilities via multiple protocols.

Built around the EFR32BG21 Wireless Gecko SoC, the BGM210L includes a built-in PCB trace antenna, an RF matching network (optimized for transmit power efficiency), supply decoupling and filtering components, a 38.4 MHz reference crystal, and an RF shield. A general block diagram of the module is shown below.

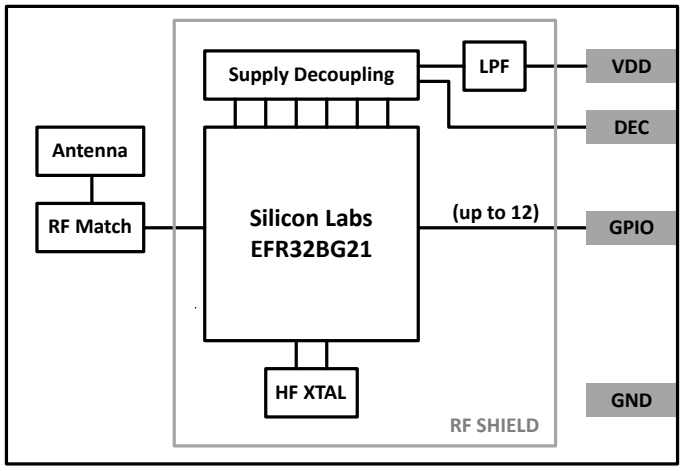

Figure 3.1. BGM210L Block Diagram

3.2 EFR32BG21 SoC

The EFR32BG21 SoC features a 32-bit ARM Cortex M33 core, a 2.4 GHz high-performance radio, 1 MB of Flash memory, a dedicated core for security, a rich set of MCU peripherals, and various clock management and serial interfacing options. Consult the EFR32xG21 Wireless Gecko Reference Manual and the EFR32BG21 Data Sheet for details (See EFR32BG21A020F1024IM32).

3.3 Antenna

BGM210L modules include a meandered inverted-F antenna (MIFA) with the characteristics seen below.

Table 3.1. Antenna Efficiency and Peak Gain

Parameter	With optimal layout	Note
Efficiency	-2 to -2.5 dB	Antenna efficiency, gain and radiation pattern are highly dependent on the application PCB layout and mechanical design. Refer to Section 7. Design Guidelines for PCB layout and antenna integration guidelines to achieve optimal performance.
Peak gain	0.5 dBi	

3.4 Power Supply

The BGM210L requires a single nominal supply level of 3.0 V. All the necessary decoupling and filtering components are included in the module. The module can tolerate supply voltage noise of up to 700 mVpp.

The supply voltage is filtered internally in the module with a 100 kHz low-pass filter to guarantee operation across the full supply range of 1.8 to 3.8 V. Additional external filtering is neither required nor recommended as it may cause voltage drops below the minimum level tolerable by the SoC (1.71 V) during transmit bursts.

For typical use cases, the decouple pin (DEC) should be left disconnected.

4. Electrical Specifications

4.1 Electrical Characteristics

All electrical parameters in all tables are specified under the following conditions, unless stated otherwise:

- Typical values are based on T_A=25 °C and VDD = 3.0 V, by production test and/or technology characterization.
- Radio performance numbers are measured in conducted mode, based on Silicon Laboratories reference designs using output power-specific external RF impedance-matching networks for interfacing to a 50 Ω antenna.
- Minimum and maximum values represent the worst conditions across supply voltage, process variation, and operating temperature, unless stated otherwise.

4.1.1 Absolute Maximum Ratings

Stresses above those listed below may cause permanent damage to the device. This is a stress rating only and functional operation of the devices at those or any other conditions above those indicated in the operation listings of this specification is not implied. Exposure to maximum rating conditions for extended periods may affect device reliability. For more information on the available quality and reliability data, see the Quality and Reliability Monitor Report at http://www.silabs.com/support/quality/pages/default.aspx.

Table 4.1. Absolute Maximum Ratings

Parameter	Symbol	Test Condition	Min	Typ	Max	Unit
Storage temperature range	T_{STG}		-50	—	+150	°C
Voltage on VDD supply pin	V_{DDMAX}		-0.3	—	3.8	V
Voltage ramp rate on VDD supply pin	$V_{DDRAMPMAX}$		—	—	1.0	V / µs
DC voltage on any GPIO pin	V_{DIGPIN}		-0.3	—	V_{DD} + 0.3	V
Total current into VDD pin	I_{VDDMAX}	Source	—	—	200	mA
Total current into GND pin	I_{GNDMAX}	Sink	—	—	200	mA
Current per I/O pin	I_{IOMAX}	Sink	—	—	50	mA
		Source	—	—	50	mA
Current for all I/O pins	$I_{IOALLMAX}$	Sink	—	—	200	mA
		Source	—	—	200	mA
Junction temperature	T_{JMAX}		—	—	+125	°C

4.1.2 General Operating Conditions

This table specifies the general operating temperature range and supply voltage range for all supplies. The minimum and maximum values of all other tables are specifed over this operating range, unless otherwise noted.

Table 4.2. General Operating Conditions

Parameter	Symbol	Test Condition	Min	Typ	Max	Unit
Operating ambient temperature range	T_A	-N temperature grade	-40	—	+105	°C
		-I temperature grade	-40	—	+125	° C
VDD Supply Voltage	V_{DD}		1.8	3.0	3.8	V
HCLK and Core frequency	f_{HCLK}	MODE = WS1, RAMWSEN = 1[1]	—	—	80	MHz
		MODE = WS1, RAMWSEN = 0[1]	—	—	50	MHz
		MODE = WS0, RAMWSEN = 0[1]	—	—	39	MHz
PCLK frequency	f_{PCLK}		—	—	50	MHz
EM01 Group A clock frequency	$f_{EM01GRPACLK}$		—	—	80	MHz
HCLK Radio frequency	$f_{HCLKRADIO}$		—	38.4	—	MHz

Note:

1. Flash wait states are set by the MODE field in the MSC_READCTRL register. RAM wait states are enabled by setting the RAMWSEN bit in the SYSYCFG_DMEM0RAMCTRL register.

4.1.3 MCU Current Consumption at 3.0V

Unless otherwise indicated, typical conditions are: VDD = 3.0 V. T_A = 25 °C. Minimum and maximum values in this table represent the worst conditions across process variation at T_A = 25 °C.

Table 4.3. MCU Current Consumption at 3.0V

Parameter	Symbol	Test Condition	Min	Typ	Max	Unit
Current consumption in EM0 mode with all peripherals disabled[1]	I_{ACTIVE}	80 MHz HFRCO, CPU running Prime from flash	—	50.9	—	µA/MHz
		80 MHz HFRCO, CPU running while loop from flash	—	45.6	55.5	µA/MHz
		80 MHz HFRCO, CPU running CoreMark loop from flash	—	59.8	—	µA/MHz
		38.4 MHz crystal, CPU running while loop from flash	—	63.8	—	µA/MHz
Current consumption in EM1 mode with all peripherals disabled[1]	I_{EM1}	80 MHz HFRCO	—	28.7	37.6	µA/MHz
		38.4 MHz crystal	—	46.9	—	µA/MHz
Current consumption in EM2 mode	I_{EM2}	Full RAM retention and RTC running from LFXO (Bluetooth Stack not running)	—	5.1	—	µA
		Full RAM retention, RTCC running, and Bluetooth Stack running from LFXO	—	8.5	—	µA
		1 bank (16 kB) RAM retention and RTC running from LFRCO	—	4.5	10.5	µA
Current consumption in EM3 mode	I_{EM3}	Full RAM retention and RTC running from ULFRCO	—	4.8	11.4	µA
		1 bank (16 kB) RAM retention and RTC running from ULFRCO	—	4.3	—	µA
Current consumption in EM4 mode	I_{EM4}	No BURTC, no LF oscillator	—	0.21	0.5	µA
Current consumption during reset	I_{RST}	Hard pin reset held	—	146	—	µA
Current consumption per retained 16kB RAM bank in EM2	I_{RAM}		—	0.10	—	µA

Note:

1. The typical EM0/EM1 current measurement includes some current consumed by the security core for periodical housekeeping purposes. This does not include current consumed by user-triggered security operations, such as cryptographic calculations.

4.1.4 Radio Current Consumption at 3.0V

RF current consumption measured with MCU in EM1, HCLK = 38.4 MHz, and all MCU peripherals disabled. Unless otherwise indicated, typical conditions are: VDD = 3.0V. T_A = 25 °C. Minimum and maximum values in this table represent the worst conditions across process variation at T_A = 25 °C.

Table 4.4. Radio Current Consumption at 3.0V

Parameter	Symbol	Test Condition	Min	Typ	Max	Unit
Current consumption in receive mode, active packet reception	I_{RX_ACTIVE}	125 kbit/s, 2GFSK, f = 2.4 GHz, Bluetooth stack running	—	9.3	—	mA
		500 kbit/s, 2GFSK, f = 2.4 GHz, Bluetooth stack running	—	9.3	—	mA
		1 Mbit/s, 2GFSK, f = 2.4 GHz, Bluetooth stack running	—	9.3	—	mA
		2 Mbit/s, 2GFSK, f = 2.4 GHz, Bluetooth stack running	—	9.9	—	mA
Current consumption in receive mode, Stack running	I_{RX_LISTEN}	125 kbit/s, 2GFSK, f = 2.4 GHz, Bluetooth stack running	—	9.1	—	mA
		500 kbit/s, 2GFSK, f = 2.4 GHz, Bluetooth stack running	—	9.1	—	mA
		1 Mbit/s, 2GFSK, f = 2.4 GHz, Bluetooth stack running	—	9.1	—	mA
		2 Mbit/s, 2GFSK, f = 2.4 GHz, Bluetooh stack running	—	9.8	—	mA
Current consumption in transmit mode	I_{TX}	f = 2.4 GHz, CW, 12.5 dBm output power, VDD = 3.3 V	—	70	—	mA

4.1.5 RF Transmitter General Characteristics for the 2.4 GHz Band

Unless otherwise indicated, typical conditions are: T_A = 25 °C, VDD = 3.0V. RF center frequency 2.45 GHz. [1]

Table 4.5. RF Transmitter General Characteristics for the 2.4 GHz Band

Parameter	Symbol	Test Condition	Min	Typ	Max	Unit
RF tuning frequency range	F_{RANGE}	Frequency Range for Bluetooth Low-Energy	2402	—	2480	MHz
Maximum TX power [2][3]	$POUT_{MAX}$	12 dBm PA, VDD = 3.3 V	—	12.5	—	dBm
Minimum active TX Power	$POUT_{MIN}$	12 dBm PA, VDD = 3.3 V	—	-20.5	—	dBm
Output power variation vs VDD supply voltage variation, frequency = 2450MHz	$POUT_{VAR_V}$	12 dBm PA P_{out} = $POUT_{MAX}$ output power with VDD voltage swept from 3.8V to 3.0V.	—	+/- 0.5	—	dB
		12 dBm PA P_{out} = $POUT_{MAX}$ output power with VDD voltage swept from 3.8V to 1.8V	—	+0.5/-4.5	—	dB
Output power variation vs RF frequency	$POUT_{VAR_F}$	12 dBm PA, $POUT_{MAX}$, VDD = 3.3 V.	—	+/- 0.1	—	dB

Note:

1. For regulatory compliance please refer to the official certification test reports
2. Supported transmit power levels are determined by the ordering part number (OPN). Transmit power ratings for all devices covered in this data sheet can be found in the TX Power column of the Ordering Information Table.
3. The maximum TXP to comply with ETSI PSD and EIRP limits depend on antenna gain which in turn depend on the end product mechanical design. In optimal conditions the module is compliant to the ETSI PSD and EIRP limits at maximum TXP of 8.2 dBm. End product manufacturer must ensure compliance to the limits for CE marking of the end product.

4.1.6 RF Receiver General Characteristics for the 2.4 GHz Band

Unless otherwise indicated, typical conditions are: T_A = 25 °C, VDD = 3.0V. RF center frequency 2.45 GHz.

Table 4.6. RF Receiver General Characteristics for the 2.4 GHz Band

Parameter	Symbol	Test Condition	Min	Typ	Max	Unit
RF tuning frequency range	F_{RANGE}		2400	—	2483.5	MHz

4.1.7 RF Receiver Characteristics for Bluetooth Low Energy at 1 Mbps

Unless otherwise indicated, typical conditions are: T_A = 25 °C, VDD = 3.0V. RF center frequency 2.45 GHz.

Table 4.7. RF Receiver Characteristics for Bluetooth Low Energy at 1 Mbps

Parameter	Symbol	Test Condition	Min	Typ	Max	Unit
Max usable receiver input level	SAT	Signal is reference signal, packet length is 37 bytes[1]	—	10	—	dBm
Sensitivity	SENS	Signal is reference signal, 37 byte payload[1]	—	-97	—	dBm
		With non-ideal signals[2 1]	—	-96.5	—	dBm
Signal to co-channel interferer	C/I_{CC}	(see notes)[1 3]	—	+6.6	—	dB
N ± 1 Adjacent channel selectivity	C/I_1	Interferer is reference signal at +1 MHz offset[1 4 3 5]	—	-8.3	—	dB
		Interferer is reference signal at -1 MHz offset[1 4 3 5]	—	-8.7	—	dB
N ± 2 Alternate channel selectivity	C/I_2	Interferer is reference signal at +2 MHz offset[1 4 3 5]	—	-42.1	—	dB
		Interferer is reference signal at -2 MHz offset[1 4 3 5]	—	-48.9	—	dB
N ± 3 Alternate channel selectivity	C/I_3	Interferer is reference signal at +3 MHz offset[1 4 3 5]	—	-42.4	—	dB
		Interferer is reference signal at -3 MHz offset[1 4 3 5]	—	-54.8	—	dB
Selectivity to image frequency	C/I_{IM}	Interferer is reference signal at image frequency with 1 MHz precision[1 5]	—	-42.1	—	dB
Selectivity to image frequency ± 1 MHz	C/I_{IM_1}	Interferer is reference signal at image frequency +1 MHz with 1 MHz precision[1 5]	—	-42.4	—	dB
		Interferer is reference signal at image frequency -1 MHz with 1 MHz precision[1 5]	—	-8.3	—	dB
Intermodulation performance	IM	n = 3 [6]	—	-23	—	dBm

Note:

1. 0.1% Bit Error Rate.
2. With non-ideal signals as specified in Bluetooth Test Specification RF-PHY.TS.5.0.1 section 4.7.1
3. Desired signal -67 dBm.
4. Desired frequency 2402 MHz ≤ Fc ≤ 2480 MHz.
5. With allowed exceptions.
6. As specified in Bluetooth Core specification version 5.1, Vol 6, Part A, Section 4.4

4.1.8 RF Receiver Characteristics for Bluetooth Low Energy at 2 Mbps

Unless otherwise indicated, typical conditions are: T_A = 25 °C, VDD = 3.0V. RF center frequency 2.45 GHz.

Table 4.8. RF Receiver Characteristics for Bluetooth Low Energy at 2 Mbps

Parameter	Symbol	Test Condition	Min	Typ	Max	Unit
Max usable receiver input level	SAT	Signal is reference signal, packet length is 37 bytes[1]	—	10	—	dBm
Sensitivity	SENS	Signal is reference signal, 37 byte payload[1]	—	-93.9	—	dBm
		With non-ideal signals[2 1]	—	-93.4	—	dBm
Signal to co-channel interferer	C/I_{CC}	(see notes)[1 3]	—	+6.0	—	dB
N ± 1 Adjacent channel selectivity	C/I_1	Interferer is reference signal at +2 MHz offset[1 4 3 5]	—	-8.0	—	dB
		Interferer is reference signal at -2 MHz offset[1 4 3 5]	—	-8.8	—	dB
N ± 2 Alternate channel selectivity	C/I_2	Interferer is reference signal at +4 MHz offset[1 4 3 5]	—	-42.2	—	dB
		Interferer is reference signal at -4 MHz offset[1 4 3 5]	—	-50.3	—	dB
N ± 3 Alternate channel selectivity	C/I_3	Interferer is reference signal at +6 MHz offset[1 4 3 5]	—	-54.4	—	dB
		Interferer is reference signal at -6 MHz offset[1 4 3 5]	—	-55.4	—	dB
Selectivity to image frequency	C/I_{IM}	Interferer is reference signal at image frequency with 1 MHz precision[1 5]	—	-8.0	—	dB
Selectivity to image frequency ± 1 MHz	C/I_{IM_1}	Interferer is reference signal at image frequency +2 MHz with 1 MHz precision[1 5]	—	-42.2	—	dB
		Interferer is reference signal at image frequency -2 MHz with 1 MHz precision[1 5]	—	+6.0	—	dB
Intermodulation performance	IM	n = 3[6]	—	-22.3	—	dBm

Note:

1. 0.1% Bit Error Rate.
2. With non-ideal signals as specified in Bluetooth Test Specification RF-PHY.TS.5.0.1 section 4.7.1
3. Desired signal -67 dBm.
4. Desired frequency 2402 MHz ≤ Fc ≤ 2480 MHz.
5. With allowed exceptions.
6. As specified in Bluetooth Core specification version 5.1, Vol 6, Part A, Section 4.4

4.1.9 RF Receiver Characteristics for Bluetooth Low Energy at 500 kbps

Unless otherwise indicated, typical conditions are: T_A = 25 °C, VDD = 3.0V. RF center frequency 2.45 GHz.

Table 4.9. RF Receiver Characteristics for Bluetooth Low Energy at 500 kbps

Parameter	Symbol	Test Condition	Min	Typ	Max	Unit
Max usable receiver input level	SAT	Signal is reference signal, packet length is 37 bytes[1]	—	10	—	dBm
Sensitivity	SENS	Signal is reference signal[1]	—	-100.1	—	dBm
		With non-ideal signals[2 1]	—	-99.5	—	dBm
Signal to co-channel interferer	C/I_{CC}	(see notes)[1 3]	—	+2.1	—	dB
N ± 1 Adjacent channel selectivity	C/I_1	Interferer is reference signal at +1 MHz offset[1 4 3 5]	—	-9.0	—	dB
		Interferer is reference signal at -1 MHz offset[1 4 3 5]	—	-9.5	—	dB
N ± 2 Alternate channel selectivity	C/I_2	Interferer is reference signal at +2 MHz offset[1 4 3 5]	—	-44.4	—	dB
		Interferer is reference signal at -2 MHz offset[1 4 3 5]	—	-51.9	—	dB
N ± 3 Alternate channel selectivity	C/I_3	Interferer is reference signal at +3 MHz offset[1 4 3 5]	—	-44.3	—	dB
		Interferer is reference signal at -3 MHz offset[1 4 3 5]	—	-58.3	—	dB
Selectivity to image frequency	C/I_{IM}	Interferer is reference signal at image frequency with 1 MHz precision[1 5]	—	-44.4	—	dB
Selectivity to image frequency ± 1 MHz	C/I_{IM_1}	Interferer is reference signal at image frequency +1 MHz with 1 MHz precision[1 5]	—	-44.3	—	dB
		Interferer is reference signal at image frequency -1 MHz with 1 MHz precision[1 5]	—	-9.0	—	dB

Note:

1. 0.1% Bit Error Rate.
2. With non-ideal signals as specified in Bluetooth Test Specification RF-PHY.TS.5.0.1 section 4.7.1
3. Desired signal -72 dBm.
4. Desired frequency 2402 MHz ≤ Fc ≤ 2480 MHz.
5. With allowed exceptions.

4.1.10 RF Receiver Characteristics for Bluetooth Low Energy at 125 kbps

Unless otherwise indicated, typical conditions are: T_A = 25 °C, VDD = 3.0V. RF center frequency 2.45 GHz.

Table 4.10. RF Receiver Characteristics for Bluetooth Low Energy at 125 kbps

Parameter	Symbol	Test Condition	Min	Typ	Max	Unit
Max usable receiver input level	SAT	Signal is reference signal, packet length is 37 bytes[1]	—	10	—	dBm
Sensitivity	SENS	Signal is reference signal[1]	—	-104.4	—	dBm
		With non-ideal signals[2 1]	—	-104.1	—	dBm
Signal to co-channel interferer	C/I_{CC}	(see notes)[1 3]	—	+0.8	—	dB
N ± 1 Adjacent channel selectivity	C/I_1	Interferer is reference signal at +1 MHz offset[1 4 3 5]	—	-13.1	—	dB
		Interferer is reference signal at -1 MHz offset[1 4 3 5]	—	-13.6	—	dB
N ± 2 Alternate channel selectivity	C/I_2	Interferer is reference signal at +2 MHz offset[1 4 3 5]	—	-49.5	—	dB
		Interferer is reference signal at -2 MHz offset[1 4 3 5]	—	-56.9	—	dB
N ± 3 Alternate channel selectivity	C/I_3	Interferer is reference signal at +3 MHz offset[1 4 3 5]	—	-47.0	—	dB
		Interferer is reference signal at -3 MHz offset[1 4 3 5]	—	-63.1	—	dB
Selectivity to image frequency	C/I_{IM}	Interferer is reference signal at image frequency with 1 MHz precision[1 5]	—	-49.5	—	dB
Selectivity to image frequency ± 1 MHz	C/I_{IM_1}	Interferer is reference signal at image frequency +1 MHz with 1 MHz precision[1 5]	—	-47.0	—	dB
		Interferer is reference signal at image frequency -1 MHz with 1 MHz precision[1 5]	—	-13.1	—	dB

Note:

1. 0.1% Bit Error Rate.
2. With non-ideal signals as specified in Bluetooth Test Specification RF-PHY.TS.5.0.1 section 4.7.1
3. Desired signal -79 dBm.
4. Desired frequency 2402 MHz ≤ Fc ≤ 2480 MHz.
5. With allowed exceptions.

4.1.11 High-Frequency Crystal

Table 4.11. High-Frequency Crystal

Parameter	Symbol	Test Condition	Min	Typ	Max	Unit
Crystal frequency	f_{HFXTAL}		—	38.4	—	MHz
Initial calibrated accuracy	ACC_{HFXTAL}		-10	—	+10	ppm
Temperature drift	$DRIFT_{HFXTAL}$	Across specified temperature range	-30	—	+30	ppm

4.1.12 GPIO Pins

Unless otherwise indicated, typical conditions are: VDD = 3.0 V.

Table 4.12. GPIO Pins

Parameter	Symbol	Test Condition	Min	Typ	Max	Unit
Leakage current	I_{LEAK_IO}	MODEx = DISABLED, VDD = 1.71V	—	1.9	—	nA
		MODEx = DISABLED, VDD = 3.0 V	—	2.5	—	nA
		MODEx = DISABLED, VDD = 3.8 V T_A = 125 °C	—	—	200	nA
Input low voltage	V_{IL}	Any GPIO pin and RESETn	—	—	0.3 * VDD	V
Input high voltage	V_{IH}	Any GPIO pin and RESETn	0.7 * VDD	—	—	V
Output low voltage	V_{OL}	Sinking 20mA, VDD = 3.0 V	—	—	0.2 * VDD	V
		Sinking 8mA, VDD = 1.62 V	—	—	0.4 * VDD	V
Output high voltage	V_{OH}	Sourcing 20mA, VDD = 3.0 V	0.8 * VDD	—	—	V
		Sourcing 8mA, VDD = 1.62 V	0.6 * VDD	—	—	V
GPIO rise time	T_{GPIO_RISE}	VDD = 3.0V, C_{load} = 50pF, SLEWRATE = 4, 10% to 90%	—	8.4	—	ns
		VDD = 1.7V, C_{load} = 50pF, SLEWRATE = 4, 10% to 90%	—	13	—	ns
GPIO fall time	T_{GPIO_FALL}	VDD = 3.0V, C_{load} = 50pF, SLEWRATE = 4, 90% to 10%	—	7.1	—	ns
		VDD = 1.7V, C_{load} = 50pF, SLEWRATE = 4, 90% to 10%	—	11.9	—	ns
Pull up/down resistance[1]	R_{PULL}	pull-up: MODEn = DISABLE DOUT=1, pull-down: MODEn = WIREDORPULLDOWN DOUT = 0	35	44	55	kΩ
Maximum filtered glitch width	T_{GF}	MODE = INPUT, DOUT = 1	—	26	—	ns
RESETn low time to ensure pin reset	T_{RESET}		100	—	—	ns

Note:
1. GPIO and RESETn pull-ups connect to the VDD supply. Pull-downs on GPIO connect to VSS.

4.1.13 Microcontroller Peripherals

The MCU peripherals set available in BGM210L modules includes:

- 12-bit 1 Msps ADC
- Analog Comparators
- 16-bit and 32-bit Timers/Counters
- 24-bit Low Energy Timer for waveform generation
- 32-bit Real Time Counter
- USART (UART/SPI/SmartCards/IrDA/I2S)
- I^2C peripheral interfaces
- 12 Channel Peripheral Reflex System

For details on their electrical performance, consult the relevant portions of Section 4 in the SoC datasheet.

To learn which GPIO ports provide access to every peripheral, consult Section 6.3 Analog Peripheral Connectivity and Section 6.4 Digital Peripheral Connectivity.

4.2 Typical Performance Curves

Typical performance curves indicate typical characterized performance under the stated conditions.

4.2.1 Antenna Radiation and Efficiency

Typical BGM210L antenna radiation patterns and efficiency under optimal operating conditions are plotted in the figure below. Antenna gain and radiation patterns have a strong dependence on the size and shape of the application PCB the module is mounted on and, also, on the proximity of any mechanical design to the antenna.

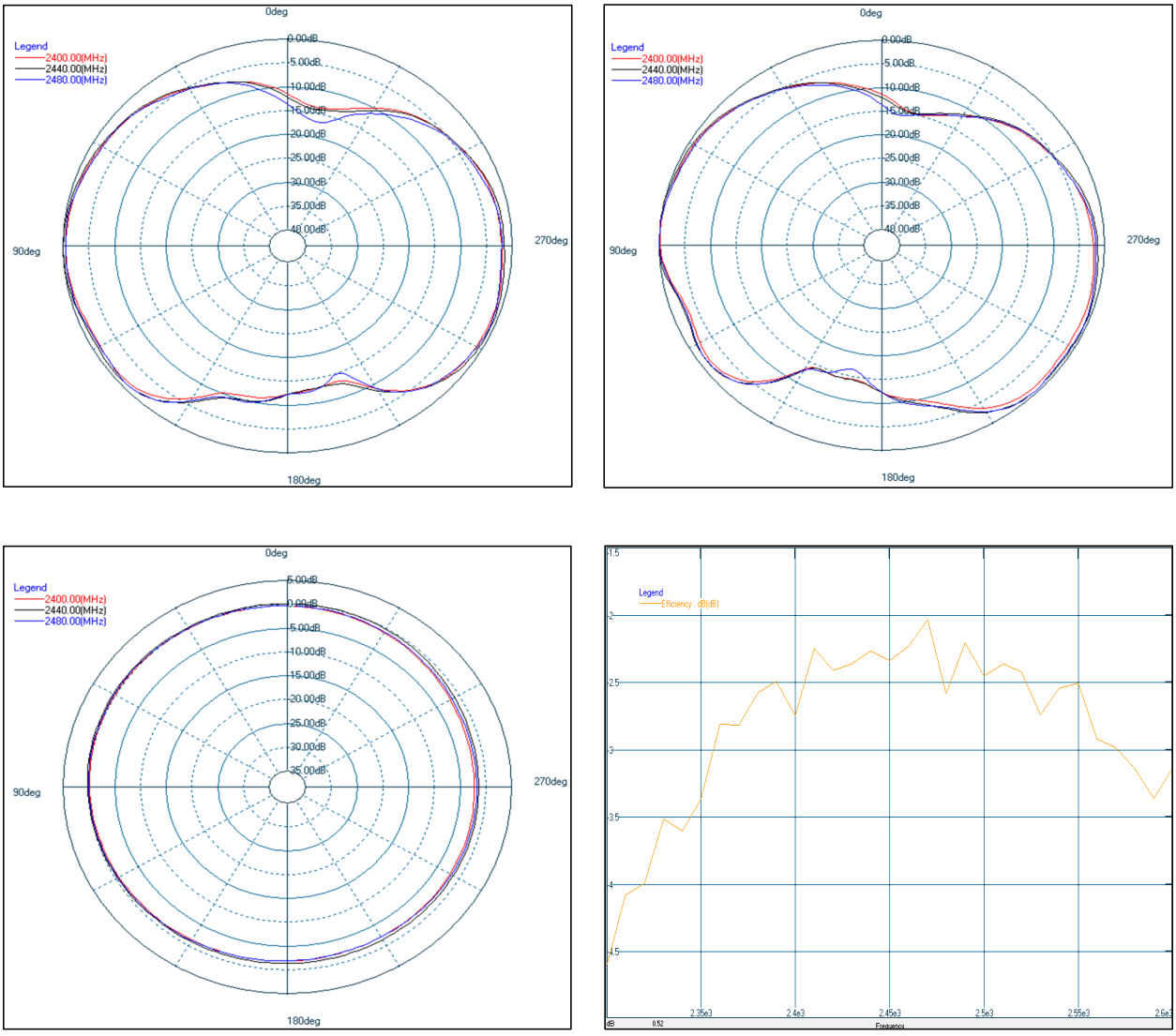

Figure 4.1. Typical 2D Antenna Radiation Patterns and Efficiency

Top Left: Phi 0°, Top Right: Phi 90°, Bottom Left: Theta 90°, Bottom Right: Radiation Efficiency

5. Reference Diagrams

A typical application circuit for the BGM210L module is shown below.

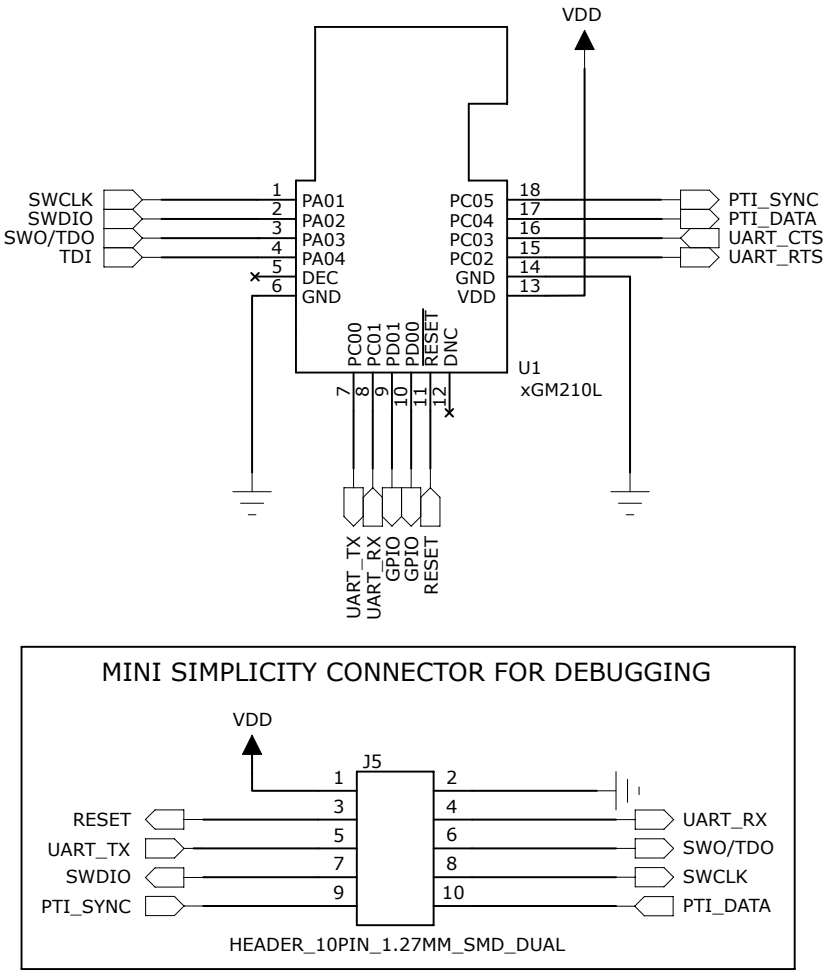

Figure 5.1. BGM210L Application Schematic

Interconnection labels correspond to supported pin functions described in 7.4 Debug, 7.5 Packet Trace Interface (PTI) and 6.4 Digital Peripheral Connectivity.

Placing the module horizontally on the end-application board permits access to all module pins. Placing it vertically restricts access to pins 13 through 18 only. The reference schematic above is applicable for the former case only. Refer to 7. Design Guidelines for more details.

6. Pin Definitions

6.1 Module Pinout

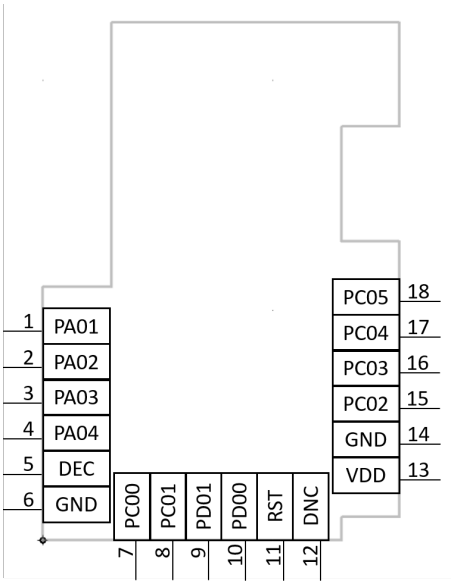

Figure 6.1. BGM210L Lighting Module Pinout

The next table shows the BGM210L pinout and general descriptions for each pin. Refer to 6.2 Alternate Pin Functions, 6.3 Analog Peripheral Connectivity, and 6.4 Digital Peripheral Connectivity for details on functions and peripherals supported by GPIOs.

Table 6.1. BGM210L Lighting Module Pin Definitions

Pin Name	Pin(s)	Description	Pin Name	Pin(s)	Description
PA01	1	GPIO/Debug	PA02	2	GPIO/Debug
PA03	3	GPIO/Debug	PA04	4	GPIO/Debug
DEC	5	Decouple[1]	GND	6	Ground
PC00	7	GPIO	PC01	8	GPIO
PD01	9	GPIO	PD00	10	GPIO
RESETn	11	Reset Pin[3]	DNC	12	Do not connect
VDD	13	VDD	GND	14	Ground
PC02	15	GPIO[2]	PC03	16	GPIO[2]
PC04	17	GPIO[2]	PC05	18	GPIO[2]

Note:

1. Available for powering module through external PMIC. Should be left disconnected typically. Do not use Decouple supply to power external circuitry.
2. Internally terminated with series 56 ohm resistor.
3. Connected to pull-up resistor to VDD internally. External pull-up is not required.

6.2 Alternate Pin Functions

Some GPIOs support alternate functions like debugging, wake-up from EM4, access to an external low frequency crystal, etc.. The following table shows which module pins have alternate capabilities and the functions they support. Refer to the SoC's reference manual for more information.

Table 6.2. GPIO Alternate Functions Table

GPIO	Alternate Function		
PA01	GPIO.SWCLK		
PA02	GPIO.SWDIO		
PA03	GPIO.SWV	GPIO.TDO	GPIO.TRACEDATA0
PA04	GPIO.TDI	GPIO.TRACECLK	
PC00	GPIO.EM4WU6		
PD01	LFXO.LFXTAL_I	LFXO.LF_EXTCLK	
PD00	LFXO.LFXTAL_O		
PC05	GPIO.EM4WU7		

6.3 Analog Peripheral Connectivity

Many analog resources are routable and can be connected to numerous GPIO's. The table below indicates which peripherals are available on each GPIO port. When a differential connection is being used Positive inputs are restricted to the EVEN pins and Negative inputs are restricted to the ODD pins. When a single ended connection is being used positive input is avaliable on all pins. See the device Reference Manual for more details on the ABUS and analog peripherals.

Table 6.3. ABUS Routing Table

Peripheral	Signal	PA		PC		PD	
		EVEN	ODD	EVEN	ODD	EVEN	ODD
ACMP0	ana_neg	Yes	Yes	Yes	Yes	Yes	Yes
	ana_pos	Yes	Yes	Yes	Yes	Yes	Yes
ACMP1	ana_neg	Yes	Yes	Yes	Yes	Yes	Yes
	ana_pos	Yes	Yes	Yes	Yes	Yes	Yes
IADC0	ana_neg	Yes	Yes	Yes	Yes	Yes	Yes
	ana_pos	Yes	Yes	Yes	Yes	Yes	Yes

6.4 Digital Peripheral Connectivity

Many digital resources are routable and can be connected to numerous GPIO's. The table below indicates which peripherals are available on each GPIO port.

Table 6.4. DBUS Routing

Peripheral.Resource	PORT		
	PA	PC	PD
ACMP0.DIGOUT	Available	Available	Available
ACMP1.DIGOUT	Available	Available	Available
CMU.CLKIN0		Available	Available
CMU.CLKOUT0		Available	Available
CMU.CLKOUT1		Available	Available
CMU.CLKOUT2	Available		
FRC.DCLK		Available	Available
FRC.DFRAME		Available	Available
FRC.DOUT		Available	Available
I2C0.SCL	Available	Available	Available
I2C0.SDA	Available	Available	Available
I2C1.SCL		Available	Available
I2C1.SDA		Available	Available
LETIMER0.OUT0	Available		
LETIMER0.OUT1	Available		
PRS.ASYNCH0	Available		
PRS.ASYNCH1	Available		
PRS.ASYNCH10		Available	Available
PRS.ASYNCH11		Available	Available
PRS.ASYNCH2	Available		
PRS.ASYNCH3	Available		
PRS.ASYNCH4	Available		
PRS.ASYNCH5	Available		
PRS.ASYNCH6		Available	Available
PRS.ASYNCH7		Available	Available
PRS.ASYNCH8		Available	Available
PRS.ASYNCH9		Available	Available
PRS.SYNCH0	Available	Available	Available
PRS.SYNCH1	Available	Available	Available
PRS.SYNCH2	Available	Available	Available
PRS.SYNCH3	Available	Available	Available

Peripheral.Resource	PORT		
	PA	PC	PD
TIMER0.CC0	Available	Available	Available
TIMER0.CC1	Available	Available	Available
TIMER0.CC2	Available	Available	Available
TIMER0.CDTI0	Available	Available	Available
TIMER0.CDTI1	Available	Available	Available
TIMER0.CDTI2	Available	Available	Available
TIMER1.CC0	Available	Available	Available
TIMER1.CC1	Available	Available	Available
TIMER1.CC2	Available	Available	Available
TIMER1.CDTI0	Available	Available	Available
TIMER1.CDTI1	Available	Available	Available
TIMER1.CDTI2	Available	Available	Available
TIMER2.CC0	Available		
TIMER2.CC1	Available		
TIMER2.CC2	Available		
TIMER2.CDTI0	Available		
TIMER2.CDTI1	Available		
TIMER2.CDTI2	Available		
TIMER3.CC0		Available	Available
TIMER3.CC1		Available	Available
TIMER3.CC2		Available	Available
TIMER3.CDTI0		Available	Available
TIMER3.CDTI1		Available	Available
TIMER3.CDTI2		Available	Available
USART0.CLK	Available	Available	Available
USART0.CS	Available	Available	Available
USART0.CTS	Available	Available	Available
USART0.RTS	Available	Available	Available
USART0.RX	Available	Available	Available
USART0.TX	Available	Available	Available
USART1.CLK	Available		
USART1.CS	Available		
USART1.CTS	Available		
USART1.RTS	Available		
USART1.RX	Available		
USART1.TX	Available		

Peripheral.Resource	PORT		
	PA	PC	PD
USART2.CLK		Available	Available
USART2.CS		Available	Available
USART2.CTS		Available	Available
USART2.RTS		Available	Available
USART2.RX		Available	Available
USART2.TX		Available	Available

7. Design Guidelines

7.1 Module Placement

The BGM210L should be placed at the edge of the end-application PCB as seen below. The copper clearance area under the antenna must be void of traces or components to prevent parasitic loading or undesired coupling of signals or noise to the antenna. The width of the GND pour on the end-application PCB should match at least the width of the antenna (e.g. 12.5 mm or greater) to have negligible effect on antenna performance.

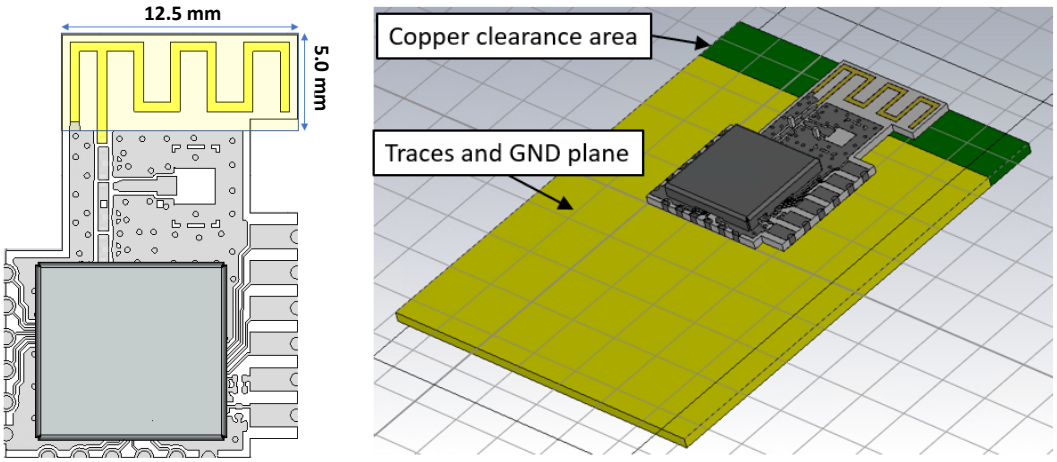

Figure 7.1. Inverted-F Antenna Clearance

BGM210L modules do not support the use of an external, alternative antenna. The U.FL connector land pattern on the top layer of the module should not be used, populated or tampered with.

Figure 7.2 Horizontal Mounting on page 26 illustrates the placement recommended when mounting the module horizontally to an end-application PCB. It also shows examples of layout cases that will result in severe RF performance degradation for the module.

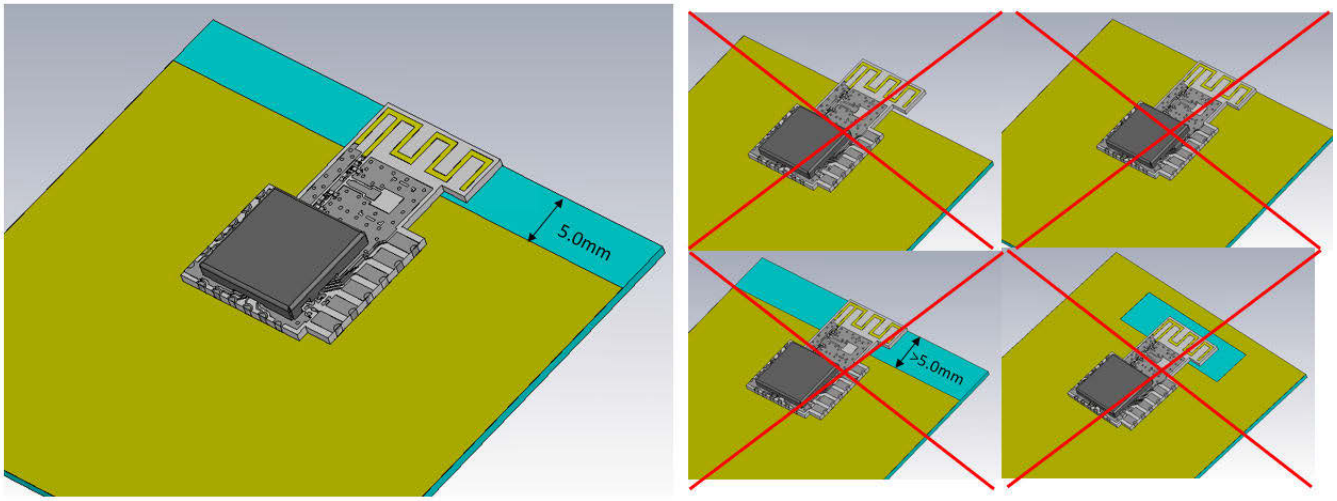

Figure 7.2. Horizontal Mounting

Vertical mounting provides mechanical design flexibility that could be advantageous for certain applications. Figure 7.3 Vertical Mounting on page 27 illustrates the placement recommended when mounting the module vertically to an end-application PCB. It also shows layout examples that will result in severe RF performance degradation for the module.

Notice that vertical mounting limits the number of pins available to interact with the module to six (VDD, GND and four GPIOs) which may be suitable for specific use cases only (e.g. to generate PWM outputs for LED control). The trade offs of vertical mounting should be carefully considered prior to choosing such arrangement.

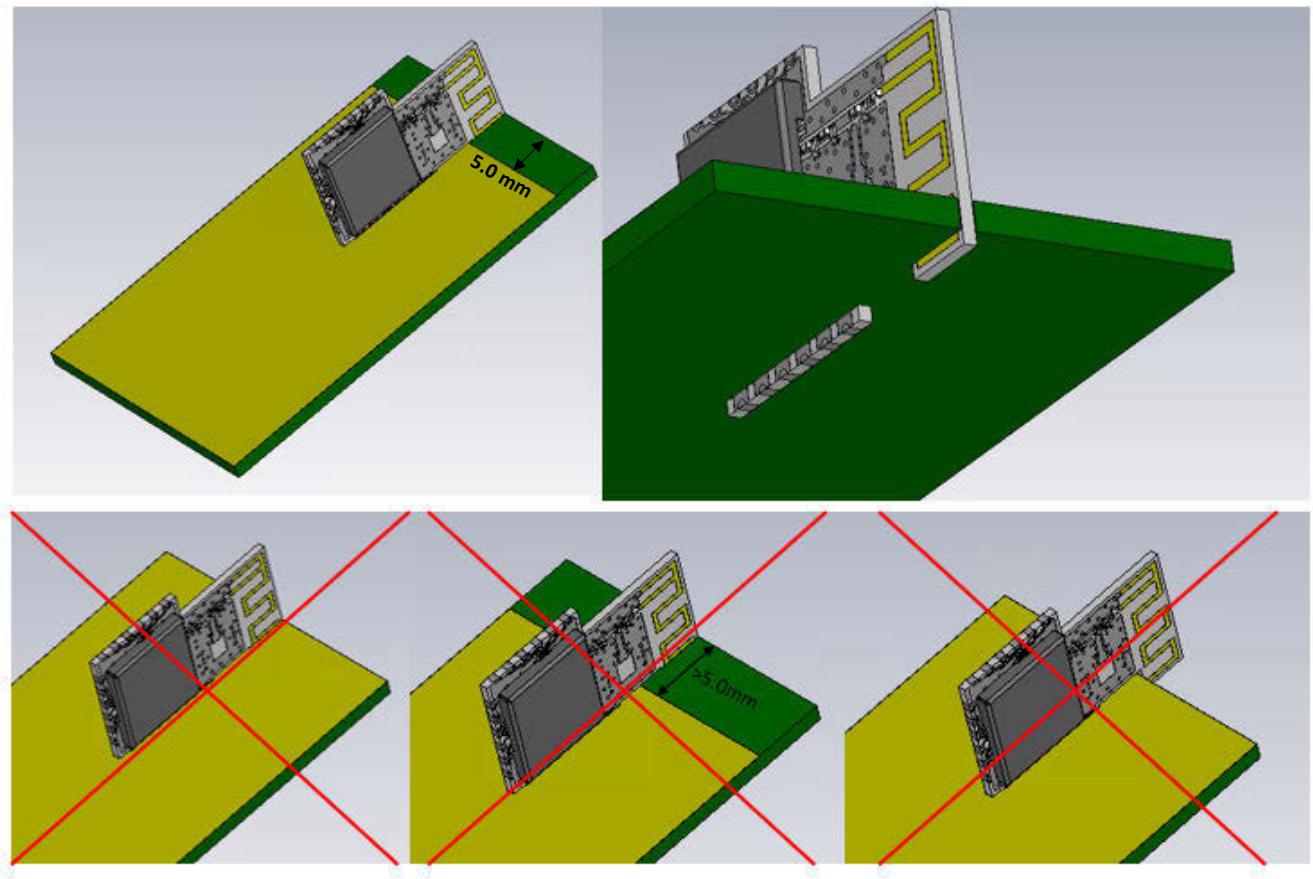

Figure 7.3. Vertical Mounting

7.2 Antenna Optimization

Due to the nature of PCB trace antennas, the BGM210L is sensitive to the thickness of the application PCB on which it is mounted, as well as to any plastics, metal or dielectric materials in close proximity to the antenna. The layout guide shown in Figure 7.2 Horizontal Mounting on page 26 is optimal for an application board thickness of 0.8 mm.

For cases where the application board is of a thickness different than the optimal, the impedance and performance of the antenna may be experimentally adjusted by

1. Cutting out the end-application PCB's FR4 material that is under the antenna, or by
2. Adjusting the separation between the lower side of the antenna and the edge of the application board's GND plane underneath the module

Impedance and performance optimization can be verified by measuring RSSI or radiated output power until either is maximized.

7.3 Reset

The BGM210L can be reset by pulling the RESET line low, by the internal watchdog timer, or by software command. All three methods are applicable when the module is mounted horizontally on a given end-application board and, hence, all module pins are accessible. When mounted vertically, however, only the second and third methods apply.

The reset state does not provide power saving functionality and it is not recommended as a means to conserve power.

7.4 Debug

See *AN958: Debugging and Programming Interfaces for Custom Designs*.

The BGM210L supports hardware debugging via 4-pin JTAG or 2-pin serial-wire debug (SWD) interfaces. It is recommended to expose the debug pins in your own hardware design for firmware update and debug purposes. The table below lists the required pins for JTAG and SWD debug interfacing, which are also presented in 6.2 Alternate Pin Functions.

If JTAG interfacing is enabled, the module must be power cycled to return to a SWD debug configuration if necessary.

Table 7.1. Debug Pins

Pin Name	Pin Number	JTAG Signal	SWD Signal	Comments
PA04	4	TDI	N/A	This pin is disabled after reset. Once enabled the pin has a built-in pull-up.
PA03	3	TDO	N/A	This pin is disabled after reset.
PA02	2	TMS	SWDIO	Pin is enabled after reset and has a built-in pull-up.
PA01	1	TCK	SWCLK	Pin is enabled after reset and has a built-in pull-down.

7.5 Packet Trace Interface (PTI)

The BGM210L integrates a true PHY-level packet trace interface (PTI) peripheral that can capture packets non-intrusively to monitor and log device and network traffic without burdening processing resources in the module's SoC. The PTI generates two output signals that can serve as a powerful debugging tool, especially in conjunction with other hardware and software development tools available from Silicon Labs. The PTI_DATA and PTI_SYNC signals can be accessed through any GPIO on ports C and D (see FRC.DOUT and FRC.DFRAME peripheral resources in Table 6.4 DBUS Routing on page 23).

8. Package Specifications

8.1 Package Outline

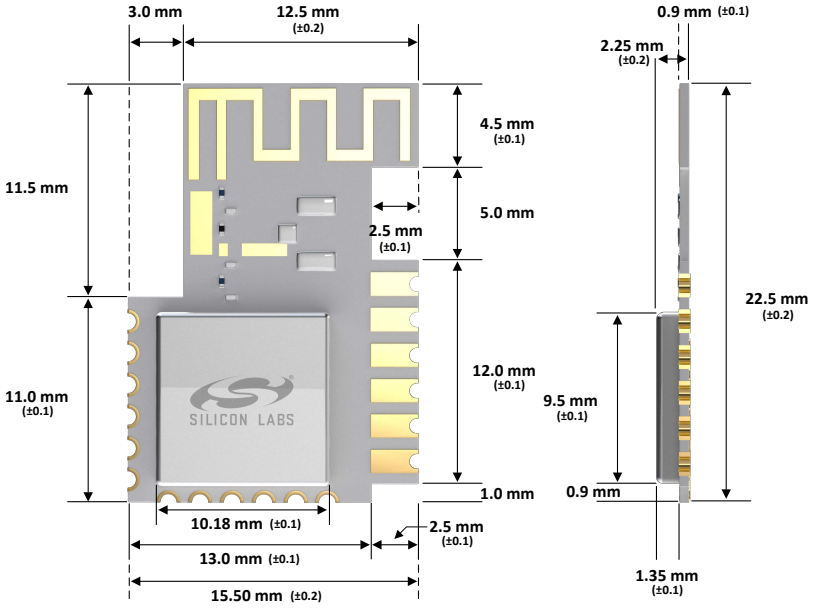

Figure 8.1. Top and Side Views

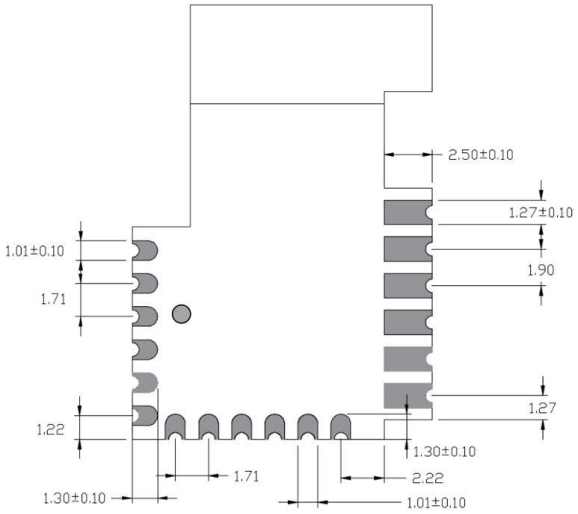

Figure 8.2. Bottom View

NOTE: Solder paste thickness adds 0.1 ± 0.05 mm to overall module height

8.2 PCB Land Pattern

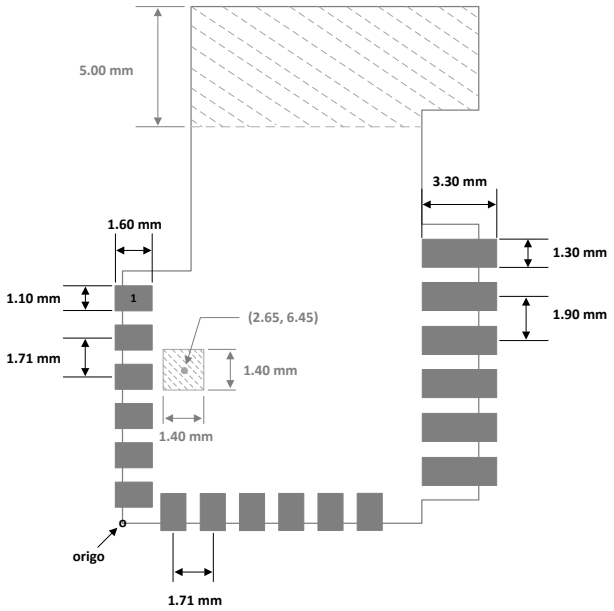

Figure 8.3. Recommended Module PCB Land Pattern

Table 8.1. Pad Sizing and Location

Pad Number	X Coordinate	Y Coordinate	Pad Dimensions
1	0.5	9.78	1.1 x 1.6
6	0.5	1.23	1.1 x 1.6
7	2.23	0.5	1.1 x 1.6
12	10.78	0.5	1.1 x 1.6
13	14.67	2.25	1.3 x 3.3
18	14.67	11.75	1.3 x 3.3

Note:

1. All dimensions in mm unless otherwise stated.
2. X and Y coordinates are specified relative to origo at indicated package corner in the figure above.
3. The module has a test point for VDD on the bottom layer at (X=2.65, Y=6.45). A keep-out area of 1.4 mm x 1.4 mm around this point is recommended to prevent the possibility of a short circuit.

8.3 Marking

The figure below shows the markings engraved on the RF shield of the module.

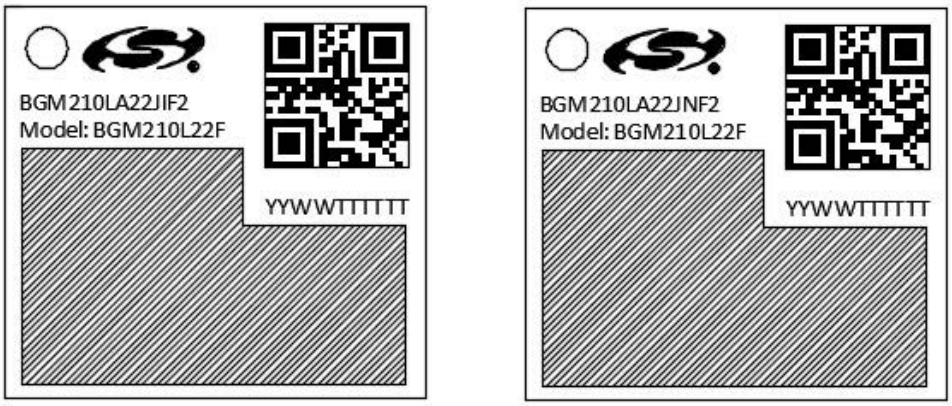

Figure 8.4. BGM210L Shield Marking

Mark Description

The module shield marking includes the following:

- BGM210Lxxxxxxx - Part number designation
- Model: BGM210L22F - Model number designation
- QR Code: YYWWMMABCDE
  - YY – Last two digits of the assembly year.
  - WW – Two-digit workweek when the device was assembled.
  - MMABCDE – Silicon Labs unit code
- YYWWTTTTTT
  - YY – Last two digits of the assembly year.
  - WW – Two-digit workweek when the device was assembled.
  - TTTTTT – Manufacturing trace code. The first letter is the device revision.
- Certification marks such as the CE logo, FCC and IC IDs, etc. will be engraved on the grayed out area or printed on the back side of the module, according to regulatory body requirements.

9. Soldering Recommendations

It is recommended that final PCB assembly of the BGM210L follows the industry standard as identified by the Institute for Printed Circuits (IPC). This product is assembled in compliance with the J-STD-001 requirements and the guidelines of IPC-AJ-820. Surface mounting of this product by the end user is recommended to follow IPC-A-610 to meet or exceed class 2 requirements.

CLASS 1 General Electronic Products

Includes products suitable for applications where the major requirement is function of the completed assembly.

CLASS 2 Dedicated Service Electronic Products

Includes products where continued performance and extended life is required, and for which uninterrupted service is desired but not critical. Typically the end-use environment would not cause failures.

CLASS 3 High Performance/Harsh Environment Electronic Products

Includes products where continued high performance or performance-on-demand is critical, equipment downtime cannot be tolerated, end-use environment may be uncommonly harsh, and the equipment must function when required, such as life support or other critical systems.

Note: General SMT application notes are provided in the AN1223 document.

10. Tape and Reel

All dimensions are given in mm unless otherwise indicated.

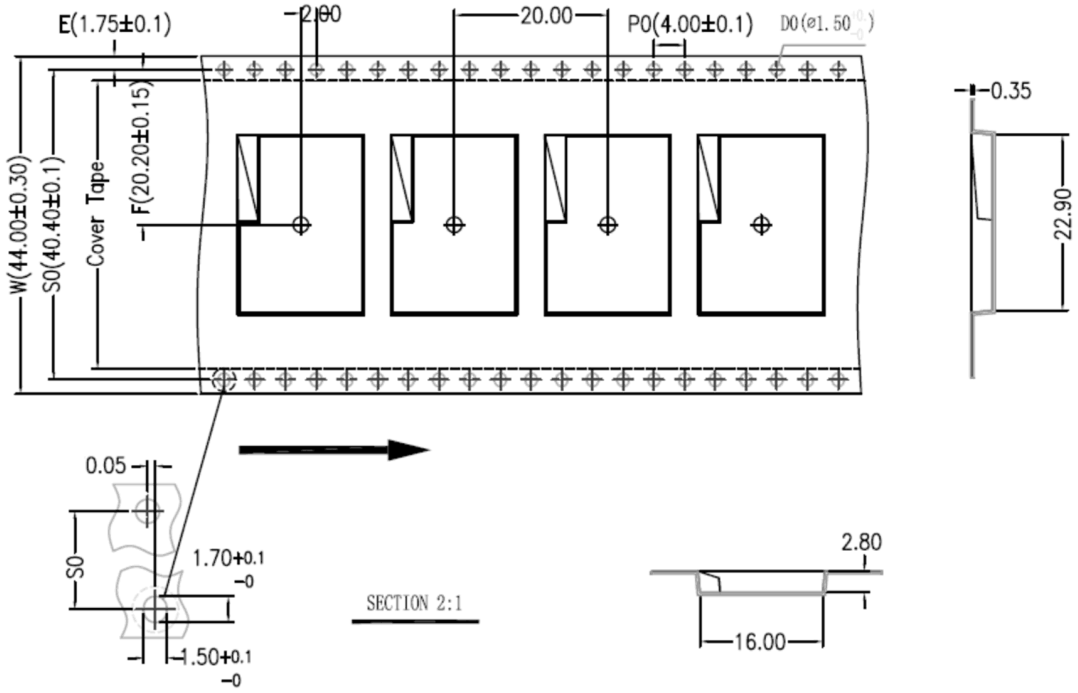

Figure 10.1. Carrier Tape Dimensions

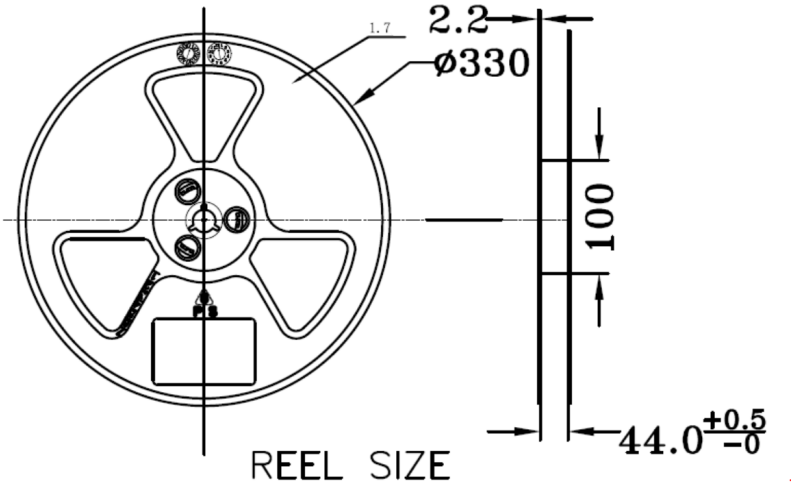

Figure 10.2. Reel Dimensions

11. Certifications

This section details the regulatory certification status of BGM210L modules in various regions. BGM210L modules are also referred to by their model name BGM210L22F.

The address for the module manufacturer and certification applicant is:

SILICON LABORATORIES FINLAND OY
Alberga Business Park, Bertel Jungin aukio 3,
02600 Espoo, Finland

11.1 CE and UKCA

BGM210L modules have been tested against the relevant harmonized/designated standards and are in conformity with the essential requirements and other relevant requirements of the Radio Equipment Directive (RED) (2014/53/EU) and of the Radio Equipment Regulations (RER) (S.I. 2017/1206).

Every end-product integrating the BGM210L module will need to perform radio EMC tests on the whole assembly according to the ETSI 301 489-x relevant standard.

It is the manufacturer's responsibility to ensure the compliance of the end-product as a whole. Since specific product assembly may have an impact on the module's RF radiated characteristics, manufacturers should carefully consider RF radiated testing with the end-product assembly.

The modules are entitled to carry the CE and UKCA Marks, and a formal Declaration of Conformity (DoC) is available at the product web page which is reachable starting from https://www.silabs.com/.

Test reports proving compliance at an EIRP output of +12.5 dBm (e.g. module nominal output power plus antenna gain) are available.

.

11.2 FCC

This device complies with Part 15 of the FCC Rules. Operation is subject to the following two conditions:

1. This device may not cause harmful interference, and
2. This device must accept any interference received, including interference that may cause undesirable operation.

Any changes or modifications not expressly approved by Silicon Labs could void the user's authority to operate the equipment.

FCC RF Radiation Exposure Statement:

This equipment complies with FCC radiation exposure limits set forth for an uncontrolled environment. End users must follow the specific operating instructions for satisfying RF exposure compliance. This transmitter meets both portable and mobile requirements in accordance to the limits exposed in the RF Exposure Analysis. This transmitter must not be co-located or operating in conjunction with any other antenna or transmitter except in accordance with FCC multi-transmitter product procedures.

OEM Responsibilities to comply with FCC Regulations:

OEM integrator is responsible for testing their end-product for any additional compliance requirements needed with this module installed (for example, digital device emissions, PC peripheral requirements, etc.). Additionally, investigative measurements and spot checking are strongly recommended to verify that the full system compliance is maintained when the module is integrated, in accordance to the "Host Product Testing Guidance" in FCC's KDB 996369 D04 Module Integration Guide V01.

- In the typical case when the integral antenna of the BGM210L is used, a minimum separation distance of 12 mm must be maintained at all times between the human body and the radiator (antenna) to meet the SAR exemption for portable conditions.
- The transmitter module must not be co-located or operating in conjunction with any other antenna or transmitter except in accordance with FCC multi-transmitter product procedures.

Important Note:

In the event that these conditions cannot be met, then for the FCC authorization to remain valid the final product will have to undergo additional testing to evaluate the RF exposure, and a permissive change will have to be applied with the help of the customer's own Telecommunication Certification Body.

End Product Labeling

The variants of BGM210L Modules are labeled with their own FCC ID. If the FCC ID is not visible when the module is installed inside another device, then the outside of the device into which the module is installed must also display a label referring to the enclosed module. In that case, the final end product must be labeled in a visible area with the following:

"Contains Transmitter Module FCC ID: QOQMGM210L"

Or

"Contains FCC ID: QOQMGM210L"

The OEM integrator has to be aware not to provide information to the end user regarding how to install or remove this RF module or change RF related parameters in the user manual of the end product.

Class B Device Notice

Note: This equipment has been tested and found to comply with the limits for a Class B digital device, pursuant to part 15 of the FCC Rules. These limits are designed to provide reasonable protection against harmful interference in a residential installation. This equipment generates, uses, and can radiate radio frequency energy and, if not installed and used in accordance with the instructions, may cause harmful interference to radio communications. However, there is no guarantee that interference will not occur in a particular installation. If this equipment does cause harmful interference to radio or television reception, which can be determined by turning the equipment off and on, the user is encouraged to try to correct the interference by one or more of the following measures:

- Reorient or relocate the receiving antenna
- Increase the separation between the equipment and receiver
- Connect the equipment into an outlet on a circuit different from that to which the receiver is connected
- Consult the dealer or an experienced radio/TV technician for help

11.3 ISED Canada

ISEDC

This radio transmitter (IC: 5123A-MGM210L) has been approved by Industry Canada to operate with the embedded antenna. Any other antenna types are strictly prohibited for use with this device.

This device complies with Industry Canada's license-exempt RSS standards. Operation is subject to the following two conditions:

1. This device may not cause interference; and
2. This device must accept any interference, including interference that may cause undesired operation of the device

RF Exposure Statement

Exception from routine SAR evaluation limits are given in RSS-102 Issue 5.

The module meets the given requirements when the minimum separation distance to human body is 20 mm.

RF exposure or SAR evaluation is not required when the separation distance is same or more than stated above. If the separation distance is less than stated above the OEM integrator is responsible for evaluating the SAR.

OEM Responsibilities to comply with IC Regulations

The module has been certified for integration into products only by OEM integrators under the following conditions:

- The antenna must be installed such that a minimum separation distance as stated above is maintained between the radiator (antenna) and all persons at all times.
- The transmitter module must not be co-located or operating in conjunction with any other antenna or transmitter.

As long as the two conditions above are met, further transmitter testing will not be required. However, the OEM integrator is still responsible for testing their end-product for any additional compliance requirements required with this module installed (for example, digital device emissions, PC peripheral requirements, etc.).

IMPORTANT NOTE

In the event that these conditions cannot be met (for certain configurations or co-location with another transmitter), then the ISEDC authorization is no longer considered valid and the IC ID cannot be used on the final product. In these circumstances, the OEM integrator will be responsible for re-evaluating the end product (including the transmitter) and obtaining a separate ISEDC authorization.

End Product Labeling

The BGM210L module is labeled with its own IC ID. If the IC ID is not visible when the module is installed inside another device, then the outside of the device into which the module is installed must also display a label referring to the enclosed module. In that case, the final end product must be labeled in a visible area with the following:

"**Contains Transmitter Module IC: 5123A-MGM210L** "

or

"**Contains IC: 5123A-MGM210L"**

The OEM integrator has to be aware not to provide information to the end user regarding how to install or remove this RF module or change RF related parameters in the user manual of the end product.

ISEDC (Français)

Industrie Canada a approuvé l'utilisation de cet émetteur radio (IC: 5123A-MGM210L) en conjonction avec l'antenne intégrée. L'utilisation de tout autre type d'antenne avec ce composant est proscrite.

Ce composant est conforme aux normes RSS, exonérées de licence d'Industrie Canada. Son mode de fonctionnement est soumis aux deux conditions suivantes:

1. Ce composant ne doit pas générer d'interférences.
2. Ce composant doit pouvoir est soumis à tout type de perturbation y compris celle pouvant nuire à son bon fonctionnement.

Déclaration d'exposition RF

L'exception tirée des limites courantes d'évaluation SAR est donnée dans le document RSS-102 Issue 5.

Le module répondent aux exigences requises lorsque la distance minimale de séparation avec le corps humain est de 20 mm.

La déclaration d'exposition RF ou l'évaluation SAR n'est pas nécessaire lorsque la distance de séparation est identique ou supérieure à celle indiquée ci-dessus. Si la distance de séparation est inférieure à celle mentionnées plus haut, il incombe à l'intégrateur OEM de procédé à une évaluation SAR.

Responsabilités des OEM pour une mise en conformité avec le Règlement du Circuit Intégré

Le module a été approuvé pour l'intégration dans des produits finaux exclusivement réalisés par des OEM sous les conditions suivantes:

- L'antenne doit être installée de sorte qu'une distance de séparation minimale indiquée ci-dessus soit maintenue entre le radiateur (antenne) et toutes les personnes avoisinante, ce à tout moment.
- Le module émetteur ne doit pas être localisé ou fonctionner avec une autre antenne ou un autre transmetteur que celle indiquée plus haut.

Tant que les deux conditions ci-dessus sont respectées, il n'est pas nécessaire de tester ce transmetteur de façon plus poussée. Cependant, il incombe à l'intégrateur OEM de s'assurer de la bonne conformité du produit fini avec les autres normes auxquelles il pourrait être soumis de fait de l'utilisation de ce module (par exemple, les émissions des périphériques numériques, les exigences de périphériques PC, etc.).

REMARQUE IMPORTANTE

Ans le cas où ces conditions ne peuvent être satisfaites (pour certaines configurations ou co-implantation avec un autre émetteur), l'autorisation ISEDC n'est plus considérée comme valide et le numéro d'identification ID IC ne peut pas être apposé sur le produit final. Dans ces circonstances, l'intégrateur OEM sera responsable de la réévaluation du produit final (y compris le transmetteur) et de l'obtention d'une autorisation ISEDC distincte.

Étiquetage des produits finis

Les modules BGM210L sont étiquetés avec leur propre ID IC. Si l'ID IC n'est pas visible lorsque le module est intégré au sein d'un autre produit, cet autre produit dans lequel le module est installé devra porter une étiquette faisant apparaitre les référence du module intégré. Dans un tel cas, sur le produit final doit se trouver une étiquette aisément lisible sur laquelle figurent les informations suivantes:

"**Contient le module transmetteur: 5123A-MGM210L** "

or

"**Contient le circuit: 5123A-MGM210L"**

L'intégrateur OEM doit être conscient qu'il ne doit pas fournir, dans le manuel d'utilisation, d'informations relatives à la façon d'installer ou de d'enlever ce module RF ainsi que sur la procédure à suivre pour modifier les paramètres liés à la radio.

11.4 Australia & New Zealand

The BGM210L22F is compliant to RCM requirements in Australia and New Zealand and it is labeled with the RCM mark. The formal DoC is available at https://www.silabs.com/.

11.5 Dominican Republic

The BGM210L22F has INDOTEL type approval in the Dominican Republic. The formal type approval certificate is available at https://www.silabs.com/.

11.6 Hong Kong

The BGM210L has approval in Hong Kong. The formal type approval certificate is available at https://www.silabs.com/.



11.7 Israel

BGM210L22F modules have wireless type approval from the Ministry of Communication (MOC) in the State of Israel. Confirmation of Compliance is based on statement 55-07826. The formal certificate can be accessed through https://www.silabs.com/.

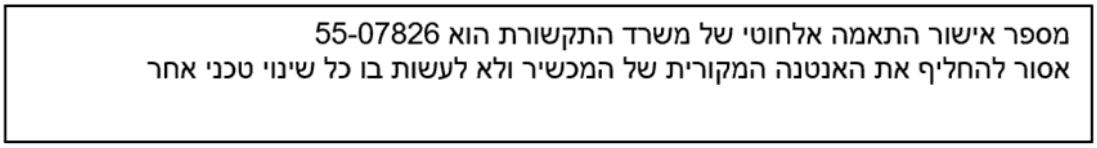

Prior to March 16 of 2021, Confirmation of Compliance was based on statement 51-68584.

11.8 Jordan

BGM210L22F modules have type approval from the Telecommunications Regulatory Commission (TRC) in Jordan. Their approval number is TRC/SS/2019/211. The formal certificate can be accessed through https://www.silabs.com/.

11.9 Serbia

The BGM210L has type approval in Serbia. The formal type approval certificate is available at https://www.silabs.com/.



11.10 Singapore

The BGM210L has been registered with the Info-communications Media Development Authority under regulation 20(6) of the Telecommunications (Dealers) Regulations (Cap 323, Rg 6) (the "Dealers Regulations") and approved for sale in Singapore. The registration number is N1436-19.

11.11 Kingdom of Bahrain

The BGM210L22F is compliant to IGA requirements in the Kingdom of Bahrain. The formal IGA Approval Certificate is available at https://www.silabs.com/.

11.12 China

The BGM210L22F conforms to SRRC provisions in China with RTE Type Approval Certificate CMIIT ID: 2019DJ13188.

11.13 Egypt

The BGM210L22F is compliant to NTRA requirements in Egypt and is labeled with the CE mark. The formal NTRA certificate is available at https://www.silabs.com/.

11.14 Japan

The BGM210L22F is certified in Japan with number 203-JN1039.

It is the end product manufacturer's responsibility to ensure that the module is configured to meet the limits documented in the formal certification test report available at https://www.silabs.com/. The maximum TX power allowed for regulatory compliance in Japan is +9.5 dBm.

Since September 1, 2014 it is allowed (and highly recommended) that a manufacturer who integrates a radio module in their host equipment can place the certification mark and certification number (the same marking/number as depicted on the label of the radio module) on the outside of the host equipment. The certification mark and certification number must be placed close to the text in the Japanese language which is provided below. This change in the Radio Law has been made in order to enable users of the combination of host and radio module to verify if they are actually using a radio device which is approved for use in Japan.

Certification Text to be Placed on the Outside Surface of the Host Equipment:

当該機器には電波法に基づく、技術基準適合証明等を受けた特定無線設備を装着している。

Translation of the text:

“This equipment contains specified radio equipment that has been certified to the Technical Regulation Conformity Certification under the Radio Law.”

The "Giteki" marking shown in the figure below must be affixed to an easily noticeable section of the specified radio equipment. Note that additional information may be required if the device is also subject to a telecom approval.

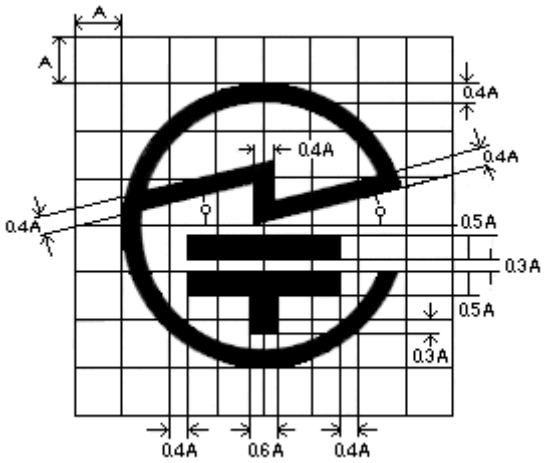

Figure 11.1. GITEKI Mark

11.15 KC South Korea

The BGM210L22F is certified in South Korea with number R-C-BGT-MGM210L22F.

It is the end product manufacturer's responsibility to ensure that the module is configured to meet the limits documented in the formal certification test report available at https://www.silabs.com/. The maximum TX power allowed for regulatory compliance in South Korea is +10 dBm.

11.16 Morocco

The BGM210L22F is compliant to ANRT requirements in Morocco with Certificate Number MR 19524 ANRT 2019 and Date of Issue 30/04/2019. The formal ANRT Certificate is available at https://www.silabs.com/.

11.17 Qatar

The BGM210L22F is compliant to CRA requirements in Qatar with ictQATAR certification number CRA/SM/2019/R-7904. The formal CRA Certificate of Type Approval is available at https://www.silabs.com/.

11.18 Thailand

The BGM210L is compliant to NTC requirements in Thailand. The formal DoC is available at https://www.silabs.com/.

11.19 NCC Taiwan

BGM210L22F modules are certified in Taiwan with NCC certification number CCAJ20LP0B51T0.
The platform manufacturer is required to mark the platform with the following sentence:
"This product contains an RF module with ID number CCAJ20LP0B51T0."

BGM210L22F通过了台湾NCC认证, 认证号为CCAJ20LP0B51T0
平台制造商必须在平台上指定:
“本产品包含一个ID号为CCAJ20LP0B51T0的RF模块”

According to NCC Low Power Radio Wave Radiation Equipment Management Regulations:	
Article 12	A low-power RF equipment that has passed the type approval shall not change the frequency, increase the power or change the characteristics and functions of the original design without permission.
Article 14	The use of low-power RF equipment shall not affect flight safety and interfere with legal communications; if interference is found, it shall be immediately deactivated and improved until no interference is found. Legal communication in the preceding paragraph refers to radio communications operating in accordance with the provisions of the Telecommunications Act. Low-power RF equipment must withstand interference from legitimate communications or radiological, radiated electrical equipment for industrial, scientific, and medical applications.

根據 NCC 低功率電波輻射性電機管理辦法 規定:	
第十二條	經型式認證合格之低功率射頻電機，非經許可，公司、商號或使用者均不得擅自變更頻率、加大功率或變更原設計之特性及功能。
第十四條	低功率射頻電機之使用不得影響飛航安全及干擾合法通信；經發現有干擾現象時，應立即停用，並改善至無干擾時方得繼續使用。 前項合法通信，指依電信法規定作業之無線電通信。 低功率射頻電機須忍受合法通信或工業、科學及醫療用電波輻射性電機設備之干擾。

11.20 UAE

The BGM210L22F has Telecom Equipment Type Approval from the Telecommunications Regulatory Authority (TRA) of the United Arab Emirates (UAE).

Autorization number: ER78839/20.

11.21 Saudi Arabia

The BGM210L22F conforms to the requirements of the Communications and Information Technology Commission (CITC) of Saudi Arabia.

Conformity Certificate No: TA 2020-727.

11.22 Bluetooth Qualification

The BGM210L modules come at launch with a pre-qualified Bluetooth Low Energy RF-PHY Tested Component having Declaration ID of D043475 and QDID of 129390, and having a listing date of 2019-04-02.

Because the validity set by the SIG for Tested Components is currently of 3 years, during the product lifetime Silicon Labs will renew this Component as it expires, whenever applicable. Renewed Tested Components will come with new DIDs and QDIDs, and these will be then referred to in end-product listings. Such new DIDs and QDIDs can be discovered starting from the original ones.

This module's RF-PHY Tested Component should be combined with the latest Wireless Gecko Link Layer and Host pre-qualified Components by Silicon Labs, when in the process of qualifying an end-product embedding the BGM210L via the SIG's Launch Studio.

12. Revision History

Revision 1.1

September, 2021

- Changed number of 16-bit Timer/Counter modules to 3 in 1. Features.
- Updated TX frequency range in 4.1.5 RF Transmitter General Characteristics for the 2.4 GHz Band to specify limits for BLE
- Removed footnote and clarified test conditions for Input low voltage and Input high voltage specifications in Table 4.12 GPIO Pins on page 17.
- Added RESETn low time to ensure pin reset (T_RESET) specification to Table 4.12 GPIO Pins on page 17.
- Updated figures in 8.3 Marking with new placement of YYWWTTTTTT
- Added 11.19 NCC Taiwan
- Added 11.20 UAE
- Added 11.21 Saudi Arabia
- Added 11.22 Bluetooth Qualification
- Updated 11.1 CE and UKCA
- Updated 11.8 Jordan

Revision 1.0

January, 2020

- Corrected LETIMER's lowest power mode in front page block diagram from EM2 to EM3
- Resolved remaining TBD entries in Section 4.1 Electrical Characteristics
- Changed "3.3V" net label in Figure 5.1 BGM210L Application Schematic on page 20 to "VDD", pin U1-12 to DNC and direction of some interconnection labels; also added note on module placement and pinout
- Updated Note 1, added Note 3, changed pin 12 from "GND" to "DNC" and corrected descriptions for pins 1-4 to "GPIO/Debug" and pins 7, 8 to "GPIO" in Table 6.1 BGM210L Lighting Module Pin Definitions on page 21
- Updated text for 6.2 Alternate Pin Functions
- Added text on U.FL land pattern and vertical mounting in Section 7.1 Module Placement
- Updated text for Section 7.2 Antenna Optimization
- Added 7.3 Reset, 7.4 Debug, and 7.5 Packet Trace Interface (PTI)
- Renamed section 8.1 Dimensions as 8.1 Package Outline
- Renamed Fig 8.1 Module Dimensions as Figure 8.1 Top and Side Views on page 29
- Added missing outline dimensions and tolerances to Figure 8.1 Top and Side Views on page 29
- Added Figure 8.2 Bottom View on page 29 and note on impact of solder paste on overall module height
- Updated Figure 8.2 Bottom View on page 29 and Figure 8.3 Recommended Module PCB Land Pattern on page 30 to show location of bottom layer VDD test point
- Updated Section
- Added 11.11 Kingdom of Bahrain, 11.12 China, 11.13 Egypt, 11.14 Japan, 11.15 KC South Korea, 11.16 Morocco, 11.17 Qatar, 11.18 Thailand

Revision 0.5.1

September, 2019

- Updated Ordering Information with "210LA" OPNs
- Updated Package Specifications with corresponding "210LA" top mark figures

Revision 0.5

August, 2019

- Initial Production Release.
- Updated Features with latest values, certifications, security, etc
- Updated Ordering Information with OPNs for Reel packaging
- Added System Overview
- Updated Electrical Specifications with latest values
- Updated Tables 6.2 - 6.4 in Pin Definitions
- Updated wording and figures in Design Guidelines
- Updated figures in Package Specifications and added Marking section
- Added Tape and Reel dimensions
- Updated list of regions/countries in Certifications
- General wording, spelling, and grammar fixes.

Revision 0.2

July, 2019

- Updated typical specification values to reflect module measurements.
- Wording, spelling, and grammar fixes.

Revision 0.1

April, 2019

- Initial Release.

Simplicity Studio

One-click access to MCU and wireless tools, documentation, software, source code libraries & more. Available for Windows, Mac and Linux!



IoT Portfolio
www.silabs.com/IoT

SW/HW
www.silabs.com/simplicity

Quality
www.silabs.com/quality

Support & Community
www.silabs.com/community

Disclaimer
Silicon Labs intends to provide customers with the latest, accurate, and in-depth documentation of all peripherals and modules available for system and software implementers using or intending to use the Silicon Labs products. Characterization data, available modules and peripherals, memory sizes and memory addresses refer to each specific device, and "Typical" parameters provided can and do vary in different applications. Application examples described herein are for illustrative purposes only. Silicon Labs reserves the right to make changes without further notice to the product information, specifications, and descriptions herein, and does not give warranties as to the accuracy or completeness of the included information. Without prior notification, Silicon Labs may update product firmware during the manufacturing process for security or reliability reasons. Such changes will not alter the specifications or the performance of the product. Silicon Labs shall have no liability for the consequences of use of the information supplied in this document. This document does not imply or expressly grant any license to design or fabricate any integrated circuits. The products are not designed or authorized to be used within any FDA Class III devices, applications for which FDA premarket approval is required or Life Support Systems without the specific written consent of Silicon Labs. A "Life Support System" is any product or system intended to support or sustain life and/or health, which, if it fails, can be reasonably expected to result in significant personal injury or death. Silicon Labs products are not designed or authorized for military applications. Silicon Labs products shall under no circumstances be used in weapons of mass destruction including (but not limited to) nuclear, biological or chemical weapons, or missiles capable of delivering such weapons. Silicon Labs disclaims all express and implied warranties and shall not be responsible or liable for any injuries or damages related to use of a Silicon Labs product in such unauthorized applications.
Note: This content may contain offensive terminology that is now obsolete. Silicon Labs is replacing these terms with inclusive language wherever possible. For more information, visit www.silabs.com/about-us/inclusive-lexicon-project

Trademark Information
Silicon Laboratories Inc.®, Silicon Laboratories®, Silicon Labs®, SiLabs® and the Silicon Labs logo®, Bluegiga®, Bluegiga Logo®, EFM®, EFM32®, EFR, Ember®, Energy Micro, Energy Micro logo and combinations thereof, "the world's most energy friendly microcontrollers", Redpine Signals®, WiSeConnect , n-Link, ThreadArch®, EZLink®, EZRadio®, EZRadioPRO®, Gecko®, Gecko OS, Gecko OS Studio, Precision32®, Simplicity Studio®, Telegesis, the Telegesis Logo®, USBXpress® , Zentri, the Zentri logo and Zentri DMS, Z-Wave®, and others are trademarks or registered trademarks of Silicon Labs. ARM, CORTEX, Cortex-M3 and THUMB are trademarks or registered trademarks of ARM Holdings. Keil is a registered trademark of ARM Limited. Wi-Fi is a registered trademark of the Wi-Fi Alliance. All other products or brand names mentioned herein are trademarks of their respective holders.

SILICON LABS

Silicon Laboratories Inc.
400 West Cesar Chavez
Austin, TX 78701
USA

www.silabs.com