CT916CYF Series

From 2.0µH to 150µH

ENGINEERING KIT #37



SPECIFICATIONS

Parts are available in ±20% inductance tolerance only.
***Indunctance drop =30% typ. at IDC**

Part Number	Inductance (µH ±20%)	L Test Freq. (kHz)	DCR (Ω ±20%)	*IDC Max. (A)
CT916CYF-2R0M	2.0	100	0.016	3.00
CT916CYF-2R7M	2.7	100	0.018	2.69
CT916CYF-3R3M	3.3	100	0.021	2.57
CT916CYF-4R7M	4.7	100	0.027	2.08
CT916CYF-6R2M	6.2	100	0.031	1.84
CT916CYF-8R2M	8.2	100	0.046	1.54
CT916CYF-100M	10	100	0.050	1.49
CT916CYF-120M	12	100	0.055	1.28
CT916CYF-150M	15	100	0.064	1.10
CT916CYF-180M	18	100	0.075	1.05
CT916CYF-220M	22	100	0.088	0.97
CT916CYF-270M	27	100	0.117	0.82
CT916CYF-330M	33	100	0.140	0.76
CT916CYF-390M	39	100	0.165	0.70
CT916CYF-470M	47	100	0.178	0.68
CT916CYF-560M	56	100	0.214	0.60
CT916CYF-680M	68	100	0.266	0.56
CT916CYF-820M	82	100	0.349	0.47
CT916CYF-101M	100	100	0.397	0.45
CT916CYF-151M	150	100	0.553	0.37

PHYSICAL DIMENSIONS

Size	A Max.	B Max.	C Max.	D	E	F
mm	6.3	6.2	3.5	2.0±0.2	0.6±0.2	4.8±0.2
inches	0.25	0.24	0.14	0.08±0.01	0.02±0.01	0.19±0.01

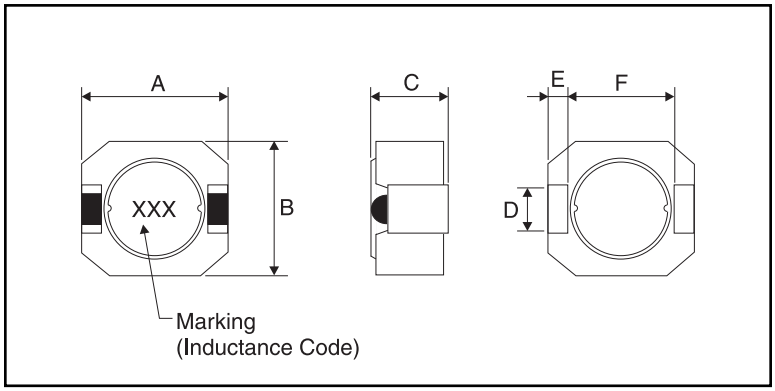

CHARACTERISTICS

Description: SMD (shielded) power inductor.
Applications: Power supplies for VTR, OA equipment, LCD televisions, PC notebooks, portable communication equipment, DC/DC converters, etc.
Operating Temperature: -40°C to +85°C
Inductance Tolerance: ±20%
Testing: Tested on a HP4285A at 100 KHz , 0.1V
Packaging: Tape & Reel
Marking: Parts are marked with inductance code
Miscellaneous: RoHS Compliant.
Additional Information: Additional electrical & physical information available upon request.
Samples available. See website for ordering information.

PAD LAYOUT

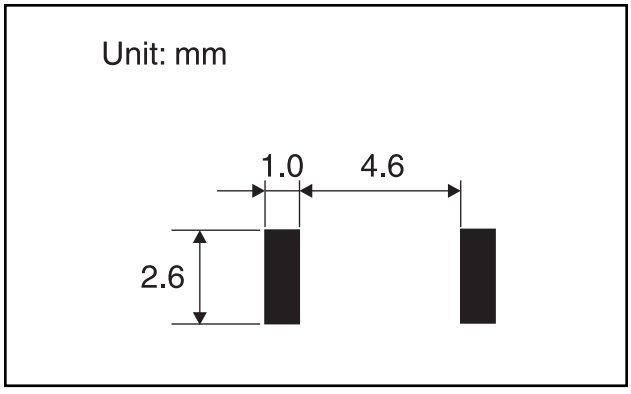

Copyright © 2017 by CT Magnetics, DBA Central Technologies. All rights reserved.
CT Magnetics reserves the right to make improvements or change specifications without notice