CTGS105F Series

From 4.7µH to 1000µH

ENGINEERING KIT #7F



CHARACTERISTICS

Description: SMD power inductor.
Applications: VTR power supplies, OA equipment, LCD televisions, PC notebooks, portable communication equipment, DC/DC converters.
Operating Temperature: -40°C to +105°C
Inductance Tolerance: ±10%, ±20%
Testing: Inductance is tested on an HP4284A or HP4285A at specified frequency.
Packaging: Tape & Reel.
Marking: Marked with inductance code.
Rated DC: The value of current when the inductance is 10% lower than its initial value at 0 Adc or D.C. current when at ΔT = 40°C whichever is lower.
Miscellaneous: RoHS Compliant.
Additional Information: Additional electrical & physical information available upon request.
Samples available. See website for ordering information.

SPECIFICATIONS

Please specify tolerance code when ordering.
CTGS105F-100_ ← K = ±10%, M= ±20%

Part Number	Inductance (µH)	L Test Freq. (_Hz)	DCR Max. (Ω)	Rated DC (A)	Available Tolerance
CTGS105F-4R7M	4.7	7.96M	.04	2.6	M
CTGS105F-100_	10	2.52M	.06	2.6	K, M
CTGS105F-120_	12	2.52M	.07	2.4	K, M
CTGS105F-150_	15	2.52M	.08	2.3	K, M
CTGS105F-180_	18	2.52M	.09	2.1	K, M
CTGS105F-220_	22	2.52M	.10	1.9	K, M
CTGS105F-270_	27	2.52M	.11	1.7	K, M
CTGS105F-330_	33	2.52M	.12	1.5	K, M
CTGS105F-390_	39	2.52M	.14	1.4	K, M
CTGS105F-470_	47	2.52M	.17	1.3	K, M
CTGS105F-560_	56	2.52M	.19	1.2	K, M
CTGS105F-680_	68	2.52M	.22	1.1	K, M
CTGS105F-820_	82	2.52M	.25	1.0	K, M
CTGS105F-101_	100	1.0k	.35	.97	K, M
CTGS105F-121_	120	1.0k	.40	.89	K, M
CTGS105F-151_	150	1.0k	.47	.78	K, M
CTGS105F-181_	180	1.0k	.63	.72	K, M
CTGS105F-221_	220	1.0k	.73	.66	K, M
CTGS105F-271_	270	1.0k	.97	.57	K, M
CTGS105F-331_	330	1.0k	1.1	.52	K, M
CTGS105F-391_	390	1.0k	1.3	.48	K, M
CTGS105F-471_	470	1.0k	1.5	.42	K, M
CTGS105F-561_	560	1.0k	1.9	.33	K, M
CTGS105F-681_	680	1.0k	2.2	.28	K, M
CTGS105F-821_	820	1.0k	2.5	.24	K, M
CTGS105F-102_	1000	1.0k	3.1	.20	K, M

PHYSICAL DIMENSIONS

Size	A	B	C	D Typ.
mm	10.0±0.4	9.0±0.4	5.4±0.4	2.1
inches	0.39±0.016	0.35±0.016	0.21±0.016	0.083

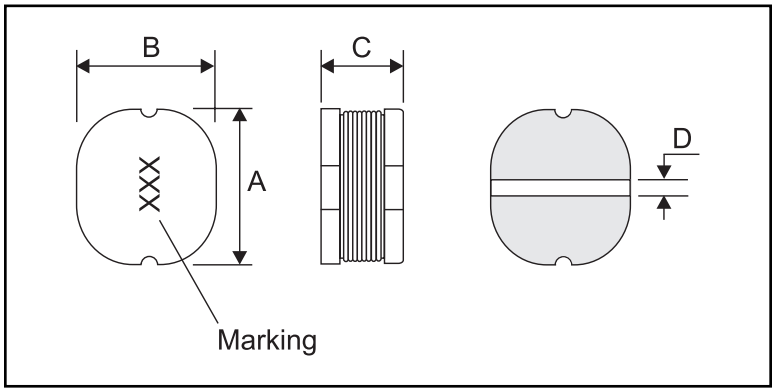

PAD LAYOUT

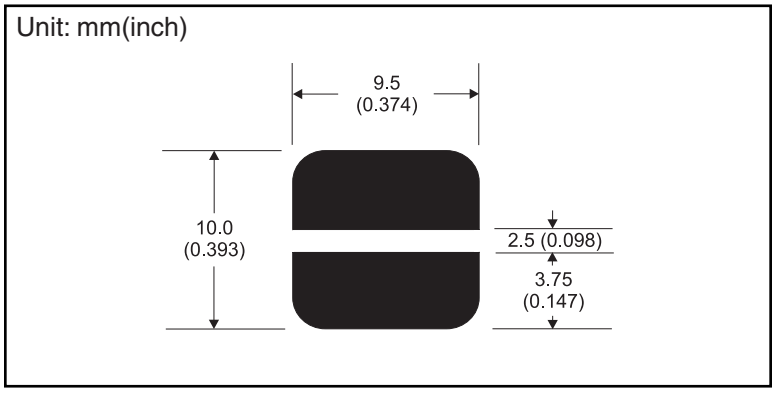

Copyright © 2017 by CT Magnetics, DBA Central Technologies. All rights reserved.
CT Magnetics reserves the right to make improvements or change specifications without notice