CTRFB0810F Series

From 10 µH to 18,000 µH



CHARACTERISTICS

Description: Radial leaded fixed inductor (UL sleeved)
Applications: Ideal as a choke coil for noise filtering.
Operating Temperature: -55°C to +125°C
Isat: DC current at which the inductance drops 10% typ. from its value without current.
Irms: Average current for temperature rise above 25°C ambient.
Inductance Tolerance: ±10%
Testing: Inductance is tested on an HP4284A at 100KHz, 0.1V
Packaging: Bulk packaging.
Marking: UL sleeving marked with inductance code.
Miscellaneous: RoHS Compliant.
Additional Information: Additional electrical & physical information available upon request.
Samples available. See website for ordering information.

SPECIFICATIONS

Parts are available in ±10% inductance tolerance only.

Part Number	Inductance (µH)	L Test Freq. (KHz)	DCR Max. (Ω)	SRF Typ. (MHz)	Isat (A)	Irms 20°C Rise (A)	Irms 40°C Rise (A)
CTRFB0810F-100K	10	100	0.030	22	4.20	4.00	5.30
CTRFB0810F-120K	12	100	0.035	20	3.90	3.75	5.10
CTRFB0810F-150K	15	100	0.040	17	3.60	3.52	4.80
CTRFB0810F-180K	18	100	0.040	15	3.30	3.30	4.50
CTRFB0810F-220K	22	100	0.050	12	2.90	3.20	4.20
CTRFB0810F-270K	27	100	0.055	12	2.60	2.87	3.90
CTRFB0810F-330K	33	100	0.075	11	2.40	2.65	3.60
CTRFB0810F-390K	39	100	0.085	10.3	2.20	2.44	3.30
CTRFB0810F-470K	47	100	0.100	9.5	2.00	2.22	3.00
CTRFB0810F-560K	56	100	0.120	8.6	1.80	2.00	2.70
CTRFB0810F-680K	68	100	0.150	7.5	1.60	1.77	2.40
CTRFB0810F-820K	82	100	0.190	6.6	1.50	1.54	2.10
CTRFB0810F-101K	100	100	0.200	5.5	1.40	1.30	1.80
CTRFB0810F-121K	120	100	0.240	5.3	1.20	1.22	1.70
CTRFB0810F-151K	150	100	0.340	4.5	1.10	1.14	1.60
CTRFB0810F-181K	180	100	0.360	4.4	1.00	1.06	1.50
CTRFB0810F-221K	220	100	0.480	4.4	0.92	0.98	1.40
CTRFB0810F-271K	270	100	0.550	4.0	0.84	0.90	1.30
CTRFB0810F-331K	330	100	0.650	3.5	0.75	0.82	1.10
CTRFB0810F-391K	390	100	0.850	3.0	0.70	0.85	1.00
CTRFB0810F-471K	470	100	1.00	2.5	0.63	0.67	0.90
CTRFB0810F-561K	560	100	1.10	2.3	0.58	0.59	0.80
CTRFB0810F-681K	680	100	1.40	2.0	0.52	0.51	0.70
CTRFB0810F-821K	820	100	1.90	2.0	0.48	0.43	0.60
CTRFB0810F-102K	1000	100	2.20	2.0	0.43	0.35	0.50
CTRFB0810F-122K	1200	100	2.80	1.6	0.40	0.33	0.47
CTRFB0810F-152K	1500	100	3.20	1.3	0.35	0.31	0.45
CTRFB0810F-182K	1800	100	3.60	1.3	0.32	0.29	0.42
CTRFB0810F-222K	2200	100	4.80	1.3	0.29	0.27	0.39
CTRFB0810F-272K	2700	100	5.60	1.2	0.26	0.25	0.36
CTRFB0810F-332K	3300	100	7.60	1.0	0.24	0.23	0.33
CTRFB0810F-392K	3900	100	8.90	0.9	0.22	0.21	0.31
CTRFB0810F-472K	4700	100	9.60	0.9	0.20	0.20	0.28
CTRFB0810F-562K	5600	100	12.0	0.8	0.18	0.18	0.25
CTRFB0810F-682K	6800	100	14.0	0.7	0.16	0.16	0.23
CTRFB0810F-822K	8200	100	17.5	0.6	0.15	0.14	0.20
CTRFB0810F-103K	10000	100	21.0	0.6	0.13	0.12	0.17
CTRFB0810F-123K	12000	100	28.0	0.5	0.12	0.11	0.15
CTRFB0810F-153K	15000	100	32.0	0.5	0.11	0.10	0.14
CTRFB0810F-183K	18000	100	36.0	0.4	0.10	0.09	0.12

PHYSICAL DIMENSIONS

Size	A Max.	B Max.	C	D	E
mm	9.5	11.5	5.0±1.0	5.0±0.5	0.65±0.05
inches	0.37	0.45	0.20±0.04	0.20±0.02	0.025±0.02

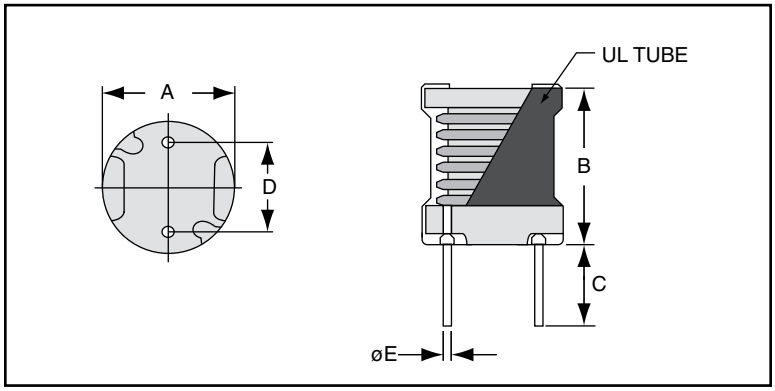

Copyright © 2010 by CT Magnetics, DBA Central Technologies. All rights reserved.
CT Magnetics reserves the right to make improvements or change specifications without notice