Product data sheet




# CM12-08EBP-KC1

## CM

**CAPACITIVE PROXIMITY SENSORS**

SICK
Sensor Intelligence.



Illustration may differ

## Ordering information

| Type | Part no. |
|---|---|
| CM12-08EBP-KC1 | 6051030 |

Other models and accessories ➜ www.sick.com/CM

## Detailed technical data

### Features

| | |
|---|---|
| **Housing** | Cylindrical thread design |
| **Thread size** | M12 x 1 |
| **Diameter** | Ø 12 mm |
| **Sensing range $S_n$** | 0.5 mm ... 8 mm [1]<br>0.5 mm ... 4 mm [2] |
| **Safe sensing range $S_a$** | 5.76 mm |
| **Installation type** | Non-flush / flush [3] |
| **Switching frequency** | 15 Hz |
| **Connection type** | Male connector M12, 4-pin |
| **Switching output** | PNP / NPN |
| **Output function** | Programmable |
| **Output characteristic** | Wire configurable [4] |
| **Electrical wiring** | DC 4-wire |
| **Adjustment** | Single teach-in button (Sensitivity)<br>Cable (Sensitivity) |
| **Enclosure rating** | IP68 (According to EN 60529) [5] |
| **Items supplied** | Mounting nut, PA12 plastic (2x) |

[1] For non-flush installation.
[2] For flush mounting.
[3] For flush mounting, Teach-in necessary.
[4] Automatic detection.
[5] 1.3 m water depth / 60 min.

### Mechanics/electronics

| | |
|---|---|
| **Supply voltage** | 10 V DC ... 36 V DC |

[1] Of Ub.
[2] At $I_a$ max.
[3] Without load.
[4] Of Sr.
[5] Ub and Ta constant.
[6] For non-flush installation min. 1 x Sn and sensor grounded.

| | |
|---|---|
| **Ripple** | ≤ 10 % [1] |
| **Voltage drop** | ≤ 2.5 V DC [2] |
| **Current consumption** | 12 mA [3] |
| **Time delay before availability** | ≤ 120 ms |
| **Hysteresis** | 3 % ... 20 % |
| **Reproducibility** | ≤ 5 % [4] [5] |
| **EMC** | According to EN 60947-5-2 [6] |
| **Continuous current $I_a$** | ≤ 200 mA |
| **Short-circuit protection** | ✓ |
| **Reverse polarity protection** | ✓ |
| **Power-up pulse protection** | ✓ |
| **Shock and vibration resistance** | 30 g, 11 ms / 10 ... 55 Hz, 1 mm |
| **Ambient operating temperature** | –20 °C ... +85 °C |
| **Ambient temperature, storage** | –40 °C ... +85 °C |
| **Housing material** | Plastic |
| **Housing length** | 84.7 mm |
| **Thread length** | 46.5 mm |
| **Tightening torque, max.** | ≤ 1 Nm |
| **UL File No.** | NRKH.E191603 |

[1] Of Ub.
[2] At $I_a$ max.
[3] Without load.
[4] Of Sr.
[5] Ub and Ta constant.
[6] For non-flush installation min. 1 x Sn and sensor grounded.

## Safety-related parameters

| | |
|---|---|
| **$MTTF_D$** | 603 years |
| **$DC_{avg}$** | 0 % |
| **$T_M$ (mission time)** | 20 years |

## Reduction factors

| | |
|---|---|
| **Note** | The values are reference values which may vary |
| **Metal** | 1 |
| **Water** | 1 |
| **PVC** | Approx. 0.4 |
| **Oil** | Approx. 0.25 |
| **Glass** | 0.6 |
| **Ceramics** | 0.5 |
| **Alcohol** | 0.7 |
| **Wood** | 0.2 ... 0.7 |

## Installation note

| | |
|---|---|
| **Remark** | Associated graphic see "Installation" |

| | |
|---|---|
| **B** | 12 mm |
| **C** | 12 mm |
| **D** | 12 mm |
| **E** | 8 mm |

## Classifications

| | |
|---|---|
| **ECl@ss 5.0** | 27270102 |
| **ECl@ss 5.1.4** | 27270102 |
| **ECl@ss 6.0** | 27270102 |
| **ECl@ss 6.2** | 27270102 |
| **ECl@ss 7.0** | 27270102 |
| **ECl@ss 8.0** | 27270102 |
| **ECl@ss 8.1** | 27270102 |
| **ECl@ss 9.0** | 27270102 |
| **ECl@ss 10.0** | 27270102 |
| **ECl@ss 11.0** | 27270102 |
| **ECl@ss 12.0** | 27274201 |
| **ETIM 5.0** | EC002715 |
| **ETIM 6.0** | EC002715 |
| **ETIM 7.0** | EC002715 |
| **ETIM 8.0** | EC002715 |
| **UNSPSC 16.0901** | 39122230 |

## Installation note

Non-flush installation

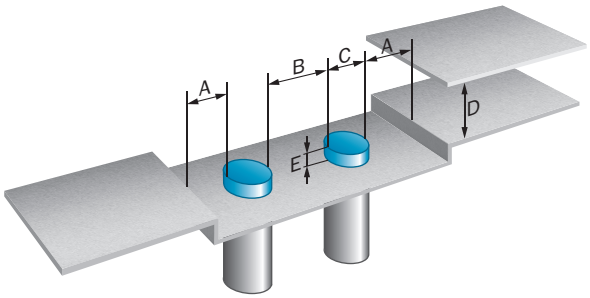


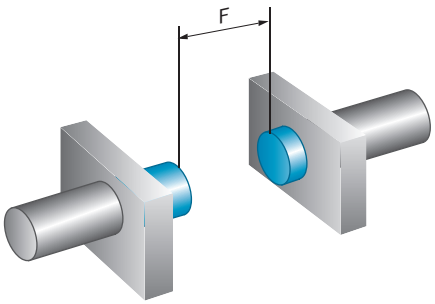

## Connection diagram

Cd-235

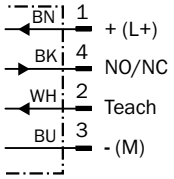


## Characteristic curve

CM12

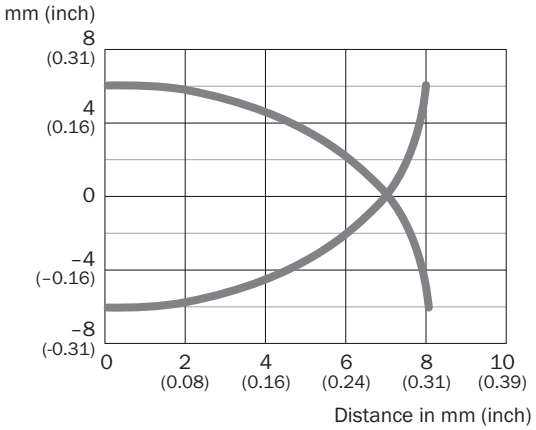


## Dimensional drawing (Dimensions in mm (inch))

CM12, connector

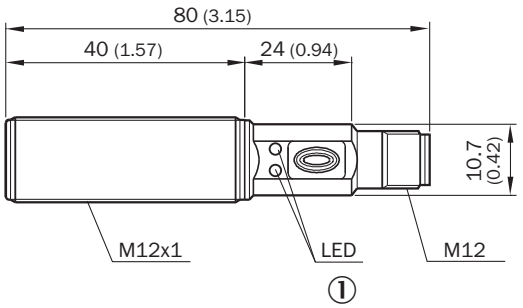


① LED yellow: output active; LED green: Power and signal reserve

## Recommended accessories

Other models and accessories ➜ www.sick.com/CM

| | Brief description | Type | Part no. |
|---|---|---|---|
| Universal bar clamp systems | | | |
|  | Plate N05 for universal clamp bracket, M12, Zinc plated steel (sheet), Zinc die cast (clamping bracket), Universal clamp (5322626), mounting hardware | BEF-KHS-N05 | 2051611 |
| Mounting brackets and plates | | | |
|  | Mounting plate for M12 sensors, steel, zinc coated, without mounting hardware | BEF-WG-M12 | 5321869 |
|  | Mounting bracket for M12 sensors, steel, zinc coated, without mounting hardware | BEF-WN-M12 | 5308447 |
| Plug connectors and cables | | | |
|  | Head A: female connector, M12, 4-pin, straight, A-coded<br>Head B: Flying leads<br>Cable: Sensor/actuator cable, PVC, unshielded, 2 m | YF2A14-020VB3XLEAX | 2096234 |
| | Head A: female connector, M12, 4-pin, straight, A-coded<br>Head B: Flying leads<br>Cable: Sensor/actuator cable, PVC, unshielded, 5 m | YF2A14-050VB3XLEAX | 2096235 |
|  | Head A: female connector, M12, 4-pin, angled, A-coded<br>Head B: Flying leads<br>Cable: Sensor/actuator cable, PVC, unshielded, 2 m | YG2A14-020VB3XLEAX | 2095895 |
| | Head A: female connector, M12, 4-pin, angled, A-coded<br>Head B: Flying leads<br>Cable: Sensor/actuator cable, PVC, unshielded, 5 m | YG2A14-050VB3XLEAX | 2095897 |
|  | Head A: female connector, M12, 4-pin, straight<br>Cable: unshielded | DOS-1204-G | 6007302 |
|  | Head A: female connector, M12, 4-pin, angled<br>Cable: unshielded | DOS-1204-W | 6007303 |

# SICK AT A GLANCE

SICK is one of the leading manufacturers of intelligent sensors and sensor solutions for industrial applications. A unique range of products and services creates the perfect basis for controlling processes securely and efficiently, protecting individuals from accidents and preventing damage to the environment.

We have extensive experience in a wide range of industries and understand their processes and requirements. With intelligent sensors, we can deliver exactly what our customers need. In application centers in Europe, Asia and North America, system solutions are tested and optimized in accordance with customer specifications. All this makes us a reliable supplier and development partner.

Comprehensive services complete our offering: SICK LifeTime Services provide support throughout the machine life cycle and ensure safety and productivity.

**For us, that is “Sensor Intelligence.”**

# WORLDWIDE PRESENCE:

Contacts and other locations –www.sick.com