Product data sheet



CQ28-10NPP-KW1

CQ

CAPACITIVE PROXIMITY SENSORS

SICK
Sensor Intelligence.



Illustration may differ

Ordering information

Type	Part no.
CQ28-10NPP-KW1	6030132

Other models and accessories ➜ www.sick.com/CQ

Detailed technical data

Features

Housing	Rectangular
Dimensions (W x H x D)	28 mm x 46 mm x 5.5 mm
Sensing range S_n	1 mm ... 10 mm
Safe sensing range S_a	7.2 mm
Installation type	Non-flush
Switching frequency	10 Hz
Connection type	Cable, 4-wire, 2 m [1]
Switching output	PNP
Output function	NC or NO
Electrical wiring	DC 4-wire
Adjustment	Single teach-in button (Sensitivity) Cable (Sensitivity)
Enclosure rating	IP68 [2]

[1] Do not bend below 0 °C.
[2] According to EN 60529.

Mechanics/electronics

Supply voltage	10 V DC ... 30 V DC
Ripple	≤ 10 %
Voltage drop	≤ 2.5 V DC [1]
Current consumption	12 mA [2]
Time delay before availability	≤ 300 ms

[1] At I_a max.
[2] Without load.
[3] Of Sr.
[4] Ub and Ta constant.
[5] In EMC critical applications, conducted interference levels may lie within the frequency range of the oscillator. This can cause changes to the output signal. (See operating instructions.).

Reproducibility	≤ 5 % [3) 4)]
Temperature drift (of S_r)	± 10 %
EMC	According to EN 60947-5-2 [5)]
Continuous current I_a	≤ 200 mA
Cable material	PVC
Conductor size	0.14 mm²
Short-circuit protection	✓
Reverse polarity protection	✓
Shock and vibration resistance	30 g, 11 ms / 10 ... 55 Hz, 1 mm
Ambient operating temperature	–20 °C ... +85 °C
Ambient temperature, storage	–40 °C ... +85 °C
Housing material	Plastic, PBT
Sensing face material	Plastic
UL File No.	NRKH.E191603

[1)] At I_a max.
[2)] Without load.
[3)] Of Sr.
[4)] Ub and Ta constant.
[5)] In EMC critical applications, conducted interference levels may lie within the frequency range of the oscillator. This can cause changes to the output signal. (See operating instructions.).

Safety-related parameters

$MTTF_D$	1,112 years
DC_{avg}	0 %
T_M (mission time)	20 years

Reduction factors

Note	The values are reference values which may vary
Metal	1
Water	1
PVC	Approx. 0.4
Oil	Approx. 0.25
Glass	0.6
Ceramics	0.5
Alcohol	0.7
Wood	0.2 ... 0.7

Installation note

Remark	Associated graphic see "Installation"
A	27.6 mm
B	27.6 mm

Classifications

ECl@ss 5.0	27270102
ECl@ss 5.1.4	27270102

ECl@ss 6.0	27270102
ECl@ss 6.2	27270102
ECl@ss 7.0	27270102
ECl@ss 8.0	27270102
ECl@ss 8.1	27270102
ECl@ss 9.0	27270102
ECl@ss 10.0	27270102
ECl@ss 11.0	27270102
ECl@ss 12.0	27274201
ETIM 5.0	EC002715
ETIM 6.0	EC002715
ETIM 7.0	EC002715
ETIM 8.0	EC002715
UNSPSC 16.0901	39122230

Installation note

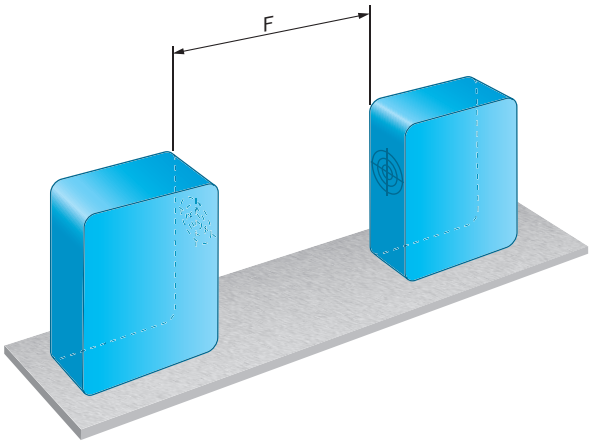

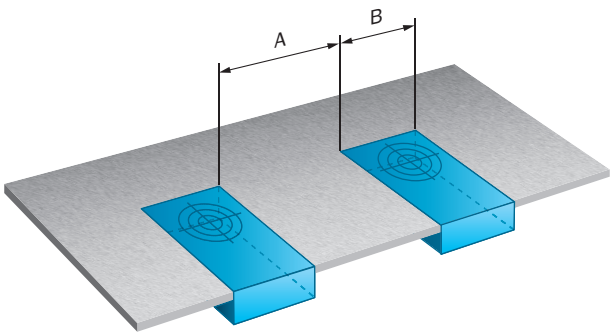

Connection type

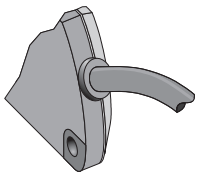

Connection diagram

Cd-023

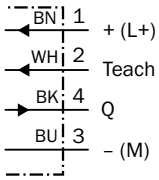

Characteristic curve

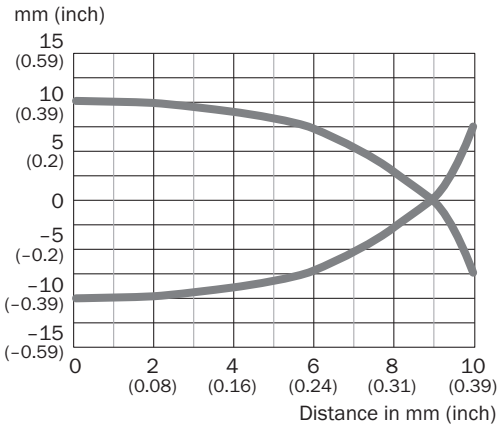

Dimensional drawing (Dimensions in mm (inch))

CQ28, cable

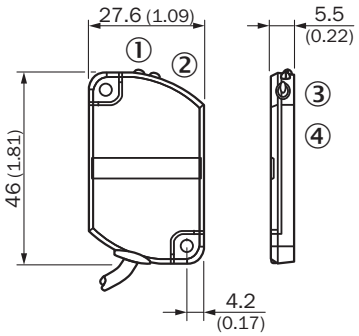

① LED indicator green
② LED indicator yellow
③ Teach-in button
④ Sensing face

SICK AT A GLANCE

SICK is one of the leading manufacturers of intelligent sensors and sensor solutions for industrial applications. A unique range of products and services creates the perfect basis for controlling processes securely and efficiently, protecting individuals from accidents and preventing damage to the environment.

We have extensive experience in a wide range of industries and understand their processes and requirements. With intelligent sensors, we can deliver exactly what our customers need. In application centers in Europe, Asia and North America, system solutions are tested and optimized in accordance with customer specifications. All this makes us a reliable supplier and development partner.

Comprehensive services complete our offering: SICK LifeTime Services provide support throughout the machine life cycle and ensure safety and productivity.

For us, that is “Sensor Intelligence.”

WORLDWIDE PRESENCE:

Contacts and other locations –www.sick.com