Product data sheet




# IMB18-08BPSVC0K

IMB

**INDUCTIVE PROXIMITY SENSORS**

SICK
Sensor Intelligence.



Illustration may differ

## Ordering information

| Type | Part no. |
|---|---|
| IMB18-08BPSVC0K | 1072821 |

**Included in delivery:** BEF-MU-M18N (1)

Other models and accessories → www.sick.com/IMB

## Detailed technical data

### Features

| | |
|---|---|
| **Housing** | Cylindrical thread design |
| **Housing** | Short-body |
| **Thread size** | M18 x 1 |
| **Diameter** | Ø 18 mm |
| **Sensing range $S_n$** | 8 mm |
| **Safe sensing range $S_a$** | 6.48 mm |
| **Installation type** | Quasi-flush [1] |
| **Switching frequency** | 1,000 Hz |
| **Connection type** | Male connector M12, 4-pin [2] |
| **Switching output** | PNP |
| **Output function** | NO |
| **Electrical wiring** | DC 3-wire |
| **Enclosure rating** | IP68 [3]<br>IP69K [4] |
| **Special features** | Resistant against coolant lubricants, Visual adjustment indicator, IO-Link, Temperature resistance |
| **Special applications** | Zones with coolants and lubricants, Mobile machines, Difficult application conditions |
| **Items supplied** | Mounting nut, V2A stainless steel, with locking teeth (2x) |

[1] When installed in conductive materials, the sensors must protrude by distance E (E = 2 mm).
[2] With gold plated contact pins.
[3] According to EN 60529.
[4] According to ISO 20653:2013-03.

## Mechanics/electronics

| | |
|---|---|
| **Supply voltage** | 10 V DC ... 30 V DC |
| **Ripple** | ≤ 10 % |
| **Voltage drop** | ≤ 2 V [1] |
| **Hysteresis** | 3 % ... 20 % |
| **Reproducibility** | ≤ 2 % [2] [3] |
| **Temperature drift (of $S_r$)** | ± 10 % |
| **EMC** | According to EN 60947-5-2 |
| **Continuous current $I_a$** | ≤ 200 mA |
| **Short-circuit protection** | ✓ |
| **Reverse polarity protection** | ✓ |
| **Power-up pulse protection** | ✓ |
| **Shock and vibration resistance** | 100 g / 2 ms / 500 cycles; 150 g / 1 Mio cycles; 10 Hz ... 55 Hz / 1 mm; 55 Hz ... 500 Hz / 60 g |
| **Ambient operating temperature** | –40 °C ... +100 °C |
| **Housing material** | Stainless steel V2A, DIN 1.4305 / AISI 303 |
| **Sensing face material** | Plastic, LCP |
| **Housing length** | 45 mm |
| **Thread length** | 27 mm |
| **Tightening torque, max.** | Typ. 60 Nm [4]<br>Typ. 90 Nm [5] |
| **Protection class** | III |
| **UL File No.** | E181493 |

[1] At $I_a$ max.
[2] Ub and Ta constant.
[3] Of Sr.
[4] When using the non-toothed side of the nut.
[5] Valid if toothed side of nut is used.

## Safety-related parameters

| | |
|---|---|
| **$MTTF_D$** | 1,971 years |
| **$DC_{avg}$** | 0 % |

## Communication interface

| | |
|---|---|
| **Communication interface** | IO-Link V1.0 |
| **Communication Interface detail** | COM2 (38,4 kBaud) |
| **Process data length** | 1 Byte |
| **Process data structure** | Bit 0 = Sr reached<br>Bit 1 = Sa reached |

## Reduction factors

| | |
|---|---|
| **Note** | The values are reference values which may vary |
| **St37 steel (Fe)** | 1 |
| **Stainless steel (V2A, 304)** | Approx. 0.55 |
| **Aluminum (Al)** | Approx. 0.24 |

| | |
|---|---|
| **Copper (Cu)** | Approx. 0.19 |
| **Brass (Br)** | Approx. 0.24 |

## Installation note

| | |
|---|---|
| **Remark** | Associated graphic see "Installation" |
| **A** | 9 mm |
| **B** | 18 mm |
| **C** | 18 mm |
| **D** | 24 mm |
| **E** | 2 mm |
| **F** | 64 mm |

## Classifications

| | |
|---|---|
| **ECl@ss 5.0** | 27270101 |
| **ECl@ss 5.1.4** | 27270101 |
| **ECl@ss 6.0** | 27270101 |
| **ECl@ss 6.2** | 27270101 |
| **ECl@ss 7.0** | 27270101 |
| **ECl@ss 8.0** | 27270101 |
| **ECl@ss 8.1** | 27270101 |
| **ECl@ss 9.0** | 27270101 |
| **ECl@ss 10.0** | 27270101 |
| **ECl@ss 11.0** | 27270101 |
| **ECl@ss 12.0** | 27274001 |
| **ETIM 5.0** | EC002714 |
| **ETIM 6.0** | EC002714 |
| **ETIM 7.0** | EC002714 |
| **ETIM 8.0** | EC002714 |
| **UNSPSC 16.0901** | 39122230 |

## Installation note

Quasi-flush installation

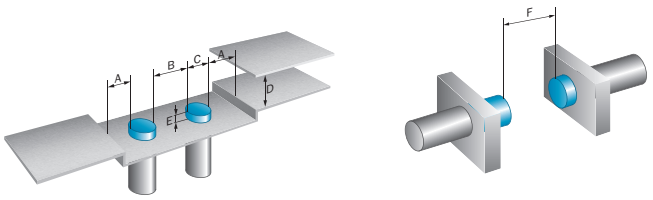

## Connection diagram

Cd-456

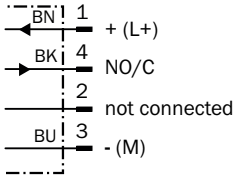


## Characteristic curve

Response diagram

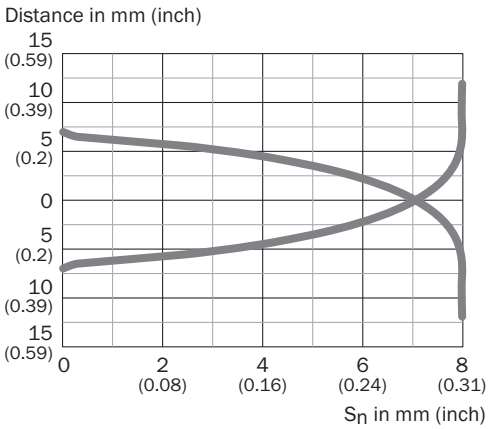


## Adjustments

Installation aid

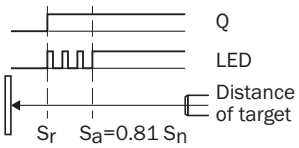

## Dimensional drawing (Dimensions in mm (inch))

IMB18 Short-body housing, connector M12, flush

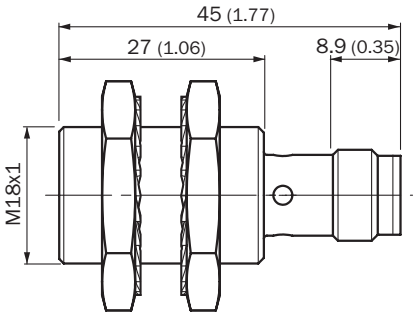


## Recommended accessories

Other models and accessories ➜ www.sick.com/IMB

| | Brief description | Type | Part no. |
|---|---|---|---|
| Universal bar clamp systems | | | |
|  | Plate N06N for universal clamp bracket, M18, Stainless steel 1.4571 (sheet), Stainless steel 1.4408 (clamp), Universal clamp (5322627), mounting hardware | BEF-KHS-N06N | 2051622 |
| Mounting brackets and plates | | | |
|  | Mounting plate for M18 sensors, stainless steel, without mounting hardware | BEF-WG-M18N | 5320948 |
|  | Mounting bracket for M18 sensors, stainless steel, without mounting hardware | BEF-WN-M18N | 5320947 |
| Plug connectors and cables | | | |
|  | Head A: female connector, M12, 4-pin, straight<br>Head B: Flying leads<br>Cable: Sensor/actuator cable, PP, unshielded, 2 m<br>This product is generally resistant to chemical cleaning agents (see ECOLAB) and other chemical compounds such as H2O2 and CH2O2. Before permanent installation is carried out, the material's resistance to the cleaning agent being used must be checked., Resistant against lactic acid & hydrogen peroxide (H2O2) | DOL-1204-G02MRN | 6058291 |
| | Head A: female connector, M12, 4-pin, straight<br>Head B: Flying leads<br>Cable: Sensor/actuator cable, PP, unshielded, 5 m<br>This product is generally resistant to chemical cleaning agents (see ECOLAB) and other chemical compounds such as H2O2 and CH2O2. Before permanent installation is carried out, the material's resistance to the cleaning agent being used must be checked., Resistant against lactic acid & hydrogen peroxide (H2O2) | DOL-1204-G05MRN | 6058476 |
|  | Head A: female connector, M12, 4-pin, angled<br>Head B: Flying leads<br>Cable: Sensor/actuator cable, PP, unshielded, 2 m<br>This product is generally resistant to chemical cleaning agents (see ECOLAB) and other chemical compounds such as H2O2 and CH2O2. Before permanent installation is carried out, the material's resistance to the cleaning agent being used must be checked., Resistant against lactic acid & hydrogen peroxide (H2O2), only suitable for PNP sensors | DOL-1204-L02MRN | 6058482 |

| | Brief description | Type | Part no. |
|---|---|---|---|
| | Head A: female connector, M12, 4-pin, angled<br>Head B: Flying leads<br>Cable: Sensor/actuator cable, PP, unshielded, 5 m<br>This product is generally resistant to chemical cleaning agents (see ECOLAB) and other chemical compounds such as H2O2 and CH2O2. Before permanent installation is carried out, the material's resistance to the cleaning agent being used must be checked., Resistant against lactic acid & hydrogen peroxide (H2O2), only suitable for PNP sensors | DOL-1204-L05MRN | 6058483 |
|  | Head A: female connector, M12, 4-pin, angled<br>Head B: Flying leads<br>Cable: Sensor/actuator cable, PP, unshielded, 2 m<br>This product is generally resistant to chemical cleaning agents (see ECOLAB) and other chemical compounds such as H2O2 and CH2O2. Before permanent installation is carried out, the material's resistance to the cleaning agent being used must be checked., Resistant against lactic acid & hydrogen peroxide (H2O2) | DOL-1204-W02MRN | 6058474 |
| | Head A: female connector, M12, 4-pin, angled<br>Head B: Flying leads<br>Cable: Sensor/actuator cable, PP, unshielded, 5 m<br>This product is generally resistant to chemical cleaning agents (see ECOLAB) and other chemical compounds such as H2O2 and CH2O2. Before permanent installation is carried out, the material's resistance to the cleaning agent being used must be checked., Resistant against lactic acid & hydrogen peroxide (H2O2) | DOL-1204-W05MRN | 6058477 |
|  | Head A: female connector, M12, 4-pin, straight, A-coded<br>Head B: Flying leads<br>Cable: Sensor/actuator cable, PUR, halogen-free, unshielded, 2 m | YF2A14-020UB3XLEAX | 2095607 |
| | Head A: female connector, M12, 4-pin, straight, A-coded<br>Head B: Flying leads<br>Cable: Sensor/actuator cable, PUR, halogen-free, unshielded, 5 m | YF2A14-050UB3XLEAX | 2095608 |
|  | Head A: female connector, M12, 4-pin, angled, A-coded<br>Head B: Flying leads<br>Cable: Sensor/actuator cable, PUR, halogen-free, unshielded, 5 m | YG2A14-050UB3XLEAX | 2095767 |
|  | Head A: female connector, M12, 4-pin, angled<br>Head B: male connector, M12, 4-pin, straight<br>Cable: Sensor/actuator cable, PP, unshielded, 2 m<br>This product is generally resistant to chemical cleaning agents (see ECOLAB) and other chemical compounds such as H2O2 and CH2O2. Before permanent installation is carried out, the material's resistance to the cleaning agent being used must be checked., Resistant against lactic acid & hydrogen peroxide (H2O2) | DSL-1204-B02MRN | 6058502 |
| | Head A: female connector, M12, 4-pin, angled<br>Head B: male connector, M12, 4-pin, straight<br>Cable: Sensor/actuator cable, PP, unshielded, 5 m<br>This product is generally resistant to chemical cleaning agents (see ECOLAB) and other chemical compounds such as H2O2 and CH2O2. Before permanent installation is carried out, the material's resistance to the cleaning agent being used must be checked., Resistant against lactic acid & hydrogen peroxide (H2O2) | DSL-1204-B05MRN | 6058503 |
|  | Head A: female connector, M12, 4-pin, straight<br>Head B: male connector, M12, 4-pin, straight<br>Cable: Sensor/actuator cable, PP, unshielded, 2 m<br>This product is generally resistant to chemical cleaning agents (see ECOLAB) and other chemical compounds such as H2O2 and CH2O2. Before permanent installation is carried out, the material's resistance to the cleaning agent being used must be checked., Resistant against lactic acid & hydrogen peroxide (H2O2) | DSL-1204-G02MRN | 6058499 |
| | Head A: female connector, M12, 4-pin, straight<br>Head B: male connector, M12, 4-pin, straight<br>Cable: Sensor/actuator cable, PP, unshielded, 5 m<br>This product is generally resistant to chemical cleaning agents (see ECOLAB) and other chemical compounds such as H2O2 and CH2O2. Before permanent installation is carried out, the material's resistance to the cleaning agent being used must be checked., Resistant against lactic acid & hydrogen peroxide (H2O2) | DSL-1204-G05MRN | 6058500 |

| | Brief description | Type | Part no. |
|---|---|---|---|
|  | Head A: female connector, M12, 4-pin, straight, A-coded<br>Head B: male connector, M12, 4-pin, straight, A-coded<br>Cable: Sensor/actuator cable, PUR, halogen-free, unshielded, 5 m | YF2A14-050UB3M2A14 | 2096001 |

## Recommended services

Additional services ➜ www.sick.com/IMB

| | Type | Part no. |
|---|---|---|
| Function Block Factory | | |
| • **Description:** The Function Block Factory supports common programmable logic controllers (PLCs) from various manufacturers, such as Siemens, Beckhoff, Rockwell Automation and B&R. More information on the FBF can be found <a href=https://fbf.cloud.sick.com target="_blank"> here</a>. | Function Block Factory | On request |

# SICK AT A GLANCE

SICK is one of the leading manufacturers of intelligent sensors and sensor solutions for industrial applications. A unique range of products and services creates the perfect basis for controlling processes securely and efficiently, protecting individuals from accidents and preventing damage to the environment.

We have extensive experience in a wide range of industries and understand their processes and requirements. With intelligent sensors, we can deliver exactly what our customers need. In application centers in Europe, Asia and North America, system solutions are tested and optimized in accordance with customer specifications. All this makes us a reliable supplier and development partner.

Comprehensive services complete our offering: SICK LifeTime Services provide support throughout the machine life cycle and ensure safety and productivity.

**For us, that is “Sensor Intelligence.”**

# WORLDWIDE PRESENCE:

Contacts and other locations –www.sick.com