Product data sheet



IMB18-12NPSVC0S

IMB

INDUCTIVE PROXIMITY SENSORS

SICK
Sensor Intelligence.



Illustration may differ

Ordering information

Type	Part no.
IMB18-12NPSVC0S	1070173

Included in delivery: BEF-MU-M18N (1)

Other models and accessories → www.sick.com/IMB

Detailed technical data

Features

Housing	Cylindrical thread design
Housing	Standard
Thread size	M18 x 1
Diameter	Ø 18 mm
Sensing range S_n	12 mm
Safe sensing range S_a	9.72 mm
Installation type	Non-flush
Switching frequency	1,000 Hz
Connection type	Male connector M12, 4-pin [1]
Switching output	PNP
Output function	NO
Electrical wiring	DC 3-wire
Enclosure rating	IP68 [2] IP69K [3]
Special features	Resistant against coolant lubricants, Visual adjustment indicator, IO-Link, Temperature resistance
Special applications	Zones with coolants and lubricants, Mobile machines, Difficult application conditions
Items supplied	Mounting nut, V2A stainless steel, with locking teeth (2x)

[1] With gold plated contact pins.
[2] According to EN 60529.
[3] According to ISO 20653:2013-03.

Mechanics/electronics

Supply voltage	10 V DC ... 30 V DC
Ripple	≤ 10 %
Voltage drop	≤ 2 V [1]
Hysteresis	3 % ... 20 %
Reproducibility	≤ 2 % [2] [3]
Temperature drift (of S_r)	± 10 %
EMC	According to EN 60947-5-2
Continuous current I_a	≤ 200 mA
Short-circuit protection	✓
Reverse polarity protection	✓
Power-up pulse protection	✓
Shock and vibration resistance	100 g / 2 ms / 500 cycles; 150 g / 1 Mio cycles; 10 Hz ... 55 Hz / 1 mm; 55 Hz ... 500 Hz / 60 g
Ambient operating temperature	–40 °C ... +100 °C
Housing material	Stainless steel V2A, DIN 1.4305 / AISI 303
Sensing face material	Plastic, LCP
Housing length	65 mm
Thread length	39 mm
Tightening torque, max.	Typ. 60 Nm [4] Typ. 90 Nm [5]
Protection class	III
UL File No.	E181493

[1] At I_a max.
[2] Ub and Ta constant.
[3] Of Sr.
[4] When using the non-toothed side of the nut.
[5] Valid if toothed side of nut is used.

Safety-related parameters

$MTTF_D$	1,971 years
DC_{avg}	0 %

Communication interface

Communication interface	IO-Link V1.0
Communication Interface detail	COM2 (38,4 kBaud)
Process data length	1 Byte
Process data structure	Bit 0 = Sr reached Bit 1 = Sa reached

Reduction factors

Note	The values are reference values which may vary
St37 steel (Fe)	1
Stainless steel (V2A, 304)	Approx. 0.7
Aluminum (Al)	Approx. 0.43

Copper (Cu)	Approx. 0.37
Brass (Br)	Approx. 0.43

Installation note

Remark	Associated graphic see "Installation"
A	18 mm
B	45 mm
C	18 mm
D	36 mm
E	12 mm
F	96 mm

Classifications

ECl@ss 5.0	27270101
ECl@ss 5.1.4	27270101
ECl@ss 6.0	27270101
ECl@ss 6.2	27270101
ECl@ss 7.0	27270101
ECl@ss 8.0	27270101
ECl@ss 8.1	27270101
ECl@ss 9.0	27270101
ECl@ss 10.0	27270101
ECl@ss 11.0	27270101
ECl@ss 12.0	27274001
ETIM 5.0	EC002714
ETIM 6.0	EC002714
ETIM 7.0	EC002714
ETIM 8.0	EC002714
UNSPSC 16.0901	39122230

Installation note

Non-flush installation

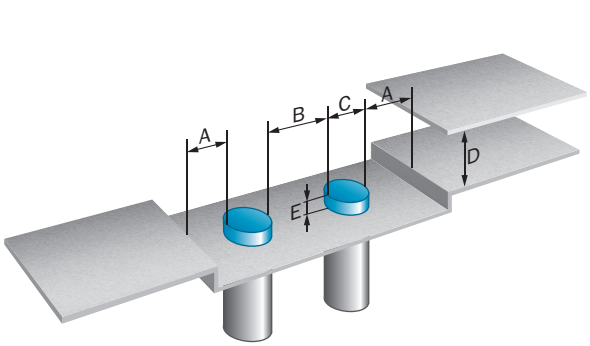

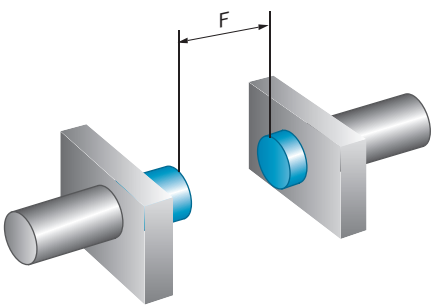

Connection diagram

Cd-456

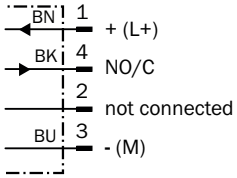

Characteristic curve

Response diagram

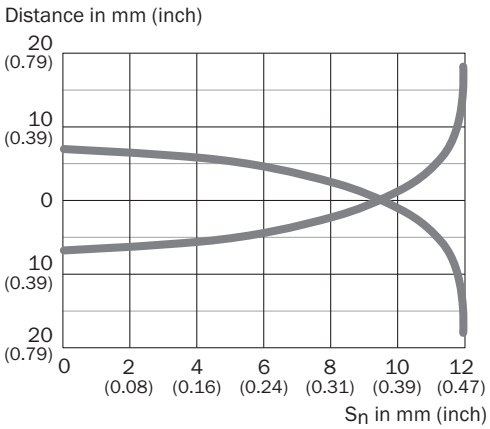

Adjustments

Installation aid

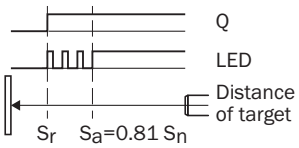

Dimensional drawing (Dimensions in mm (inch))

IMB18 Standard, connector M12, non-flush

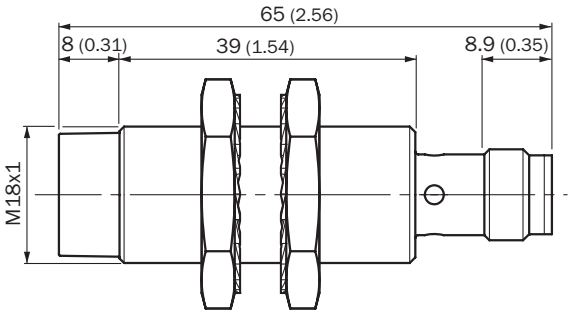

Recommended accessories

Other models and accessories ➜ www.sick.com/IMB

	Brief description	Type	Part no.
Universal bar clamp systems			
	Plate N06N for universal clamp bracket, M18, Stainless steel 1.4571 (sheet), Stainless steel 1.4408 (clamp), Universal clamp (5322627), mounting hardware	BEF-KHS-N06N	2051622
Mounting brackets and plates			
	Mounting plate for M18 sensors, stainless steel, without mounting hardware	BEF-WG-M18N	5320948
	Mounting bracket for M18 sensors, stainless steel, without mounting hardware	BEF-WN-M18N	5320947
Plug connectors and cables			
	Head A: female connector, M12, 4-pin, straight Head B: Flying leads Cable: Sensor/actuator cable, PP, unshielded, 2 m This product is generally resistant to chemical cleaning agents (see ECOLAB) and other chemical compounds such as H2O2 and CH2O2. Before permanent installation is carried out, the material's resistance to the cleaning agent being used must be checked., Resistant against lactic acid & hydrogen peroxide (H2O2)	DOL-1204-G02MRN	6058291
	Head A: female connector, M12, 4-pin, straight Head B: Flying leads Cable: Sensor/actuator cable, PP, unshielded, 5 m This product is generally resistant to chemical cleaning agents (see ECOLAB) and other chemical compounds such as H2O2 and CH2O2. Before permanent installation is carried out, the material's resistance to the cleaning agent being used must be checked., Resistant against lactic acid & hydrogen peroxide (H2O2)	DOL-1204-G05MRN	6058476
	Head A: female connector, M12, 4-pin, angled Head B: Flying leads Cable: Sensor/actuator cable, PP, unshielded, 2 m This product is generally resistant to chemical cleaning agents (see ECOLAB) and other chemical compounds such as H2O2 and CH2O2. Before permanent installation is carried out, the material's resistance to the cleaning agent being used must be checked., Resistant against lactic acid & hydrogen peroxide (H2O2), only suitable for PNP sensors	DOL-1204-L02MRN	6058482

	Brief description	Type	Part no.
	Head A: female connector, M12, 4-pin, angled Head B: Flying leads Cable: Sensor/actuator cable, PP, unshielded, 5 m This product is generally resistant to chemical cleaning agents (see ECOLAB) and other chemical compounds such as H2O2 and CH2O2. Before permanent installation is carried out, the material's resistance to the cleaning agent being used must be checked., Resistant against lactic acid & hydrogen peroxide (H2O2), only suitable for PNP sensors	DOL-1204-L05MRN	6058483
	Head A: female connector, M12, 4-pin, angled Head B: Flying leads Cable: Sensor/actuator cable, PP, unshielded, 2 m This product is generally resistant to chemical cleaning agents (see ECOLAB) and other chemical compounds such as H2O2 and CH2O2. Before permanent installation is carried out, the material's resistance to the cleaning agent being used must be checked., Resistant against lactic acid & hydrogen peroxide (H2O2)	DOL-1204-W02MRN	6058474
	Head A: female connector, M12, 4-pin, angled Head B: Flying leads Cable: Sensor/actuator cable, PP, unshielded, 5 m This product is generally resistant to chemical cleaning agents (see ECOLAB) and other chemical compounds such as H2O2 and CH2O2. Before permanent installation is carried out, the material's resistance to the cleaning agent being used must be checked., Resistant against lactic acid & hydrogen peroxide (H2O2)	DOL-1204-W05MRN	6058477
	Head A: female connector, M12, 4-pin, straight, A-coded Head B: Flying leads Cable: Sensor/actuator cable, PUR, halogen-free, unshielded, 2 m	YF2A14-020UB3XLEAX	2095607
	Head A: female connector, M12, 4-pin, straight, A-coded Head B: Flying leads Cable: Sensor/actuator cable, PUR, halogen-free, unshielded, 5 m	YF2A14-050UB3XLEAX	2095608
	Head A: female connector, M12, 4-pin, angled, A-coded Head B: Flying leads Cable: Sensor/actuator cable, PUR, halogen-free, unshielded, 5 m	YG2A14-050UB3XLEAX	2095767
	Head A: female connector, M12, 4-pin, angled Head B: male connector, M12, 4-pin, straight Cable: Sensor/actuator cable, PP, unshielded, 2 m This product is generally resistant to chemical cleaning agents (see ECOLAB) and other chemical compounds such as H2O2 and CH2O2. Before permanent installation is carried out, the material's resistance to the cleaning agent being used must be checked., Resistant against lactic acid & hydrogen peroxide (H2O2)	DSL-1204-B02MRN	6058502
	Head A: female connector, M12, 4-pin, angled Head B: male connector, M12, 4-pin, straight Cable: Sensor/actuator cable, PP, unshielded, 5 m This product is generally resistant to chemical cleaning agents (see ECOLAB) and other chemical compounds such as H2O2 and CH2O2. Before permanent installation is carried out, the material's resistance to the cleaning agent being used must be checked., Resistant against lactic acid & hydrogen peroxide (H2O2)	DSL-1204-B05MRN	6058503
	Head A: female connector, M12, 4-pin, straight Head B: male connector, M12, 4-pin, straight Cable: Sensor/actuator cable, PP, unshielded, 2 m This product is generally resistant to chemical cleaning agents (see ECOLAB) and other chemical compounds such as H2O2 and CH2O2. Before permanent installation is carried out, the material's resistance to the cleaning agent being used must be checked., Resistant against lactic acid & hydrogen peroxide (H2O2)	DSL-1204-G02MRN	6058499
	Head A: female connector, M12, 4-pin, straight Head B: male connector, M12, 4-pin, straight Cable: Sensor/actuator cable, PP, unshielded, 5 m This product is generally resistant to chemical cleaning agents (see ECOLAB) and other chemical compounds such as H2O2 and CH2O2. Before permanent installation is carried out, the material's resistance to the cleaning agent being used must be checked., Resistant against lactic acid & hydrogen peroxide (H2O2)	DSL-1204-G05MRN	6058500

	Brief description	Type	Part no.
	Head A: female connector, M12, 4-pin, straight, A-coded Head B: male connector, M12, 4-pin, straight, A-coded Cable: Sensor/actuator cable, PUR, halogen-free, unshielded, 5 m	YF2A14-050UB3M2A14	2096001

Recommended services

Additional services ➜ www.sick.com/IMB

	Type	Part no.
Function Block Factory		
• **Description:** The Function Block Factory supports common programmable logic controllers (PLCs) from various manufacturers, such as Siemens, Beckhoff, Rockwell Automation and B&R. More information on the FBF can be found here.	Function Block Factory	On request

SICK AT A GLANCE

SICK is one of the leading manufacturers of intelligent sensors and sensor solutions for industrial applications. A unique range of products and services creates the perfect basis for controlling processes securely and efficiently, protecting individuals from accidents and preventing damage to the environment.

We have extensive experience in a wide range of industries and understand their processes and requirements. With intelligent sensors, we can deliver exactly what our customers need. In application centers in Europe, Asia and North America, system solutions are tested and optimized in accordance with customer specifications. All this makes us a reliable supplier and development partner.

Comprehensive services complete our offering: SICK LifeTime Services provide support throughout the machine life cycle and ensure safety and productivity.

For us, that is “Sensor Intelligence.”

WORLDWIDE PRESENCE:

Contacts and other locations –www.sick.com