Product data sheet

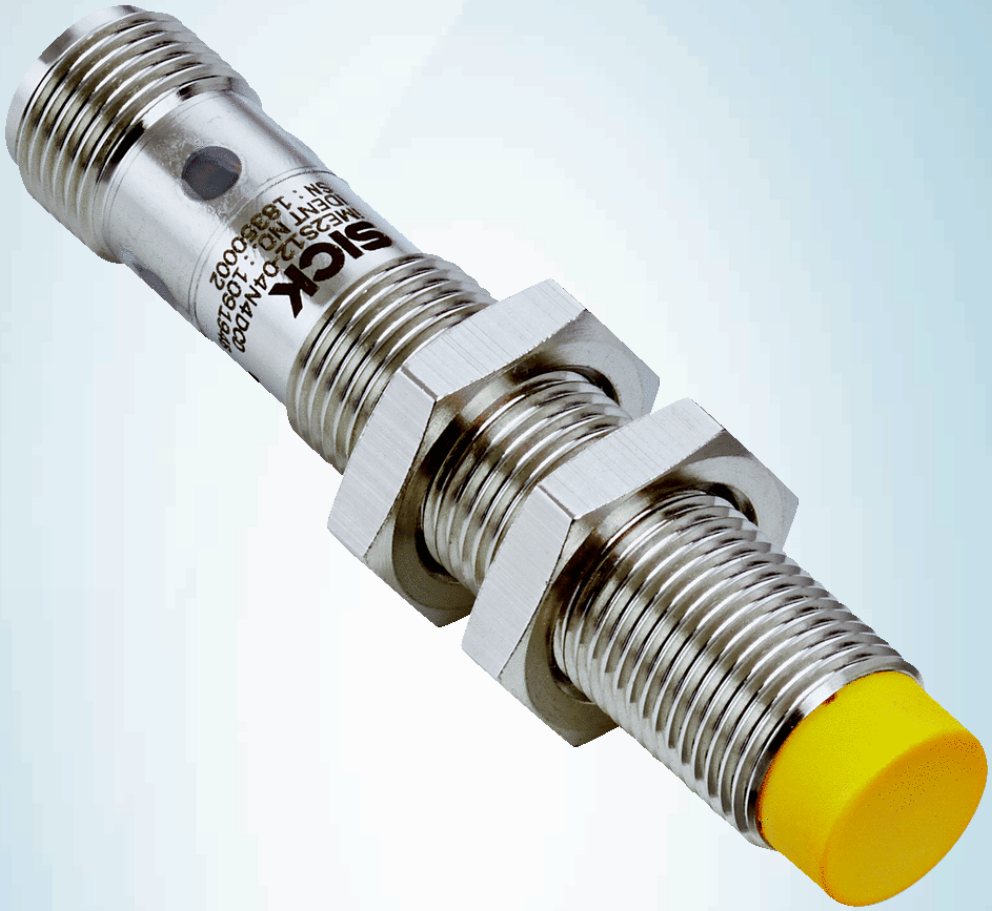

IME2S12-08N4DC0

IME2S

NON-CONTACT SAFETY SWITCHES

SICK
Sensor Intelligence.



Ordering information

Type	Part no.
IME2S12-08N4DC0	1091948

Other models and accessories ➜ www.sick.com/IME2S

Detailed technical data

Features

Sensor principle	Inductive
Number of safe outputs	2
Housing diameter	M12
Sensing range S_n	8 mm [1]
Safe switch on distance S_{ao}	6.5 mm [1]
Safe switch off distance S_{ar}	12 mm [1]
Active sensor surfaces	1
Actuation frequency	≤ 100 Hz

[1] Values apply for steel (FE360).

Safety-related parameters

Safety integrity level	SIL2 (IEC 61508)
Category	Category 2 (ISO 13849-1)
Performance level	PL d (ISO 13849-1)
PFH_D (mean probability of a dangerous failure per hour)	6.0×10^{-8} (IEC 61508) [1]
T_M (mission time)	20 years (ISO 13849-1)
Type	Type 3 (ISO 14119-1)
Actuator coding level	Uncoded (EN ISO 14119)
Safe state in the event of a fault	At least one safety-related semiconductor output (OSSD) is in the OFF state.

[1] At 40 °C and 1000 m above sea level.

Functions

Safe series connection	With Flexi Loop (with diagnostics)

Interfaces

Connection type	Male connector M12, 4-pin
Diagnostics indicator	✓

Status display	✓

Electrical data

Protection class	III (IEC 61140)
Rated insulation voltage U_i	28.8 V
Rated impulse withstand voltage U_{imp}	1,500 V
Supply voltage V_s	24 V DC (19.2 V DC ... 28.8 V DC)
Power consumption	≤ 20 mA
Type of output	Self-monitoring semiconductor outputs (OSSDs)
Response time	≤ 1 ms
Release time	≤ 1 ms
Risk time	≤ 20 ms
Switch-on time	≤ 1 s

Mechanical data

Design	Cylindrical
Housing diameter	M12
Housing length	65 mm
Thread length	36.9 mm
Material	
Housing	Nickel-plated brass
Sensor surface	VISTAL®
Installation type	Non-flush

Ambient data

Enclosure rating	IP67 (IEC 60529)
Ambient operating temperature	–25 °C ... +70 °C
Storage temperature	–25 °C ... +70 °C
Relative humidity	50 %, at 70 °C (IEC 60947-5-2)
Vibration resistance	10 Hz ... 55 Hz, 1 mm (IEC 60947-5-2)
EMC	IEC 60947-5-2 IEC 60947-5-3 IEC 61000-6-7

Classifications

ECl@ss 5.0	27272401
ECl@ss 5.1.4	27272401
ECl@ss 6.0	27272401
ECl@ss 6.2	27272401
ECl@ss 7.0	27272401
ECl@ss 8.0	27272401
ECl@ss 8.1	27272401
ECl@ss 9.0	27272401
ECl@ss 10.0	27272401
ECl@ss 11.0	27272401

ECl@ss 12.0	27274101
ETIM 5.0	EC001818
ETIM 6.0	EC001818
ETIM 7.0	EC001818
ETIM 8.0	EC001818
UNSPSC 16.0901	39122205

Dimensional drawing (Dimensions in mm (inch))

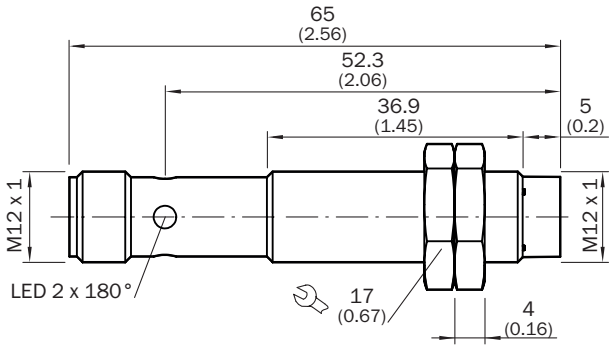

Response range

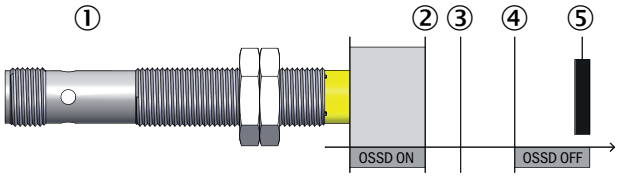

① Safety switch
② Safe switch on distance S_{ao}
③ Sensing range S_n
④ Safe switch off distance S_{ar}
⑤ Actuator

Pin assignment

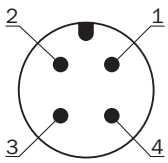

Pin	Designation	Description
1	+24 V DC	24 V DC voltage supply
2	OSSD 1	OSSD 1 output
3	0 V DC	0 V DC voltage supply

Pin	Designation	Description
4	OSSD 2	OSSD 2 output
For details see operating instructions		

Recommended accessories

Other models and accessories ➜ www.sick.com/IME2S

	Brief description	Type	Part no.
Mounting brackets and plates			
	Mounting bracket for M12 sensors, steel, zinc coated, without mounting hardware	BEF-WN-M12	5308447
Plug connectors and cables			
	Head A: female connector, M12, 4-pin, straight, A-coded Head B: Flying leads Cable: Sensor/actuator cable, PVC, unshielded, 5 m	YF2A14-050VB3XLEAX	2096235
	Head A: female connector, M12, 4-pin, straight, A-coded Head B: Flying leads Cable: Sensor/actuator cable, PVC, unshielded, 10 m	YF2A14-100VB3XLEAX	2096236
	Head A: female connector, M12, 4-pin, straight, A-coded Head B: Flying leads Cable: Sensor/actuator cable, PVC, unshielded, 15 m	YF2A14-150VB3XLEAX	2096237
	Head A: female connector, M12, 4-pin, straight, A-coded Head B: Flying leads Cable: Sensor/actuator cable, PVC, unshielded, 20 m	YF2A14-200VB3XLEAX	2096238
Terminal and alignment brackets			
	Clamping block for round sensors M12, without fixed stop, plastic (PA12), glass-fiber reinforced, mounting hardware included	BEF-KH-M12	2051479

SICK AT A GLANCE

SICK is one of the leading manufacturers of intelligent sensors and sensor solutions for industrial applications. A unique range of products and services creates the perfect basis for controlling processes securely and efficiently, protecting individuals from accidents and preventing damage to the environment.

We have extensive experience in a wide range of industries and understand their processes and requirements. With intelligent sensors, we can deliver exactly what our customers need. In application centers in Europe, Asia and North America, system solutions are tested and optimized in accordance with customer specifications. All this makes us a reliable supplier and development partner.

Comprehensive services complete our offering: SICK LifeTime Services provide support throughout the machine life cycle and ensure safety and productivity.

For us, that is “Sensor Intelligence.”

WORLDWIDE PRESENCE:

Contacts and other locations –www.sick.com