Product data sheet

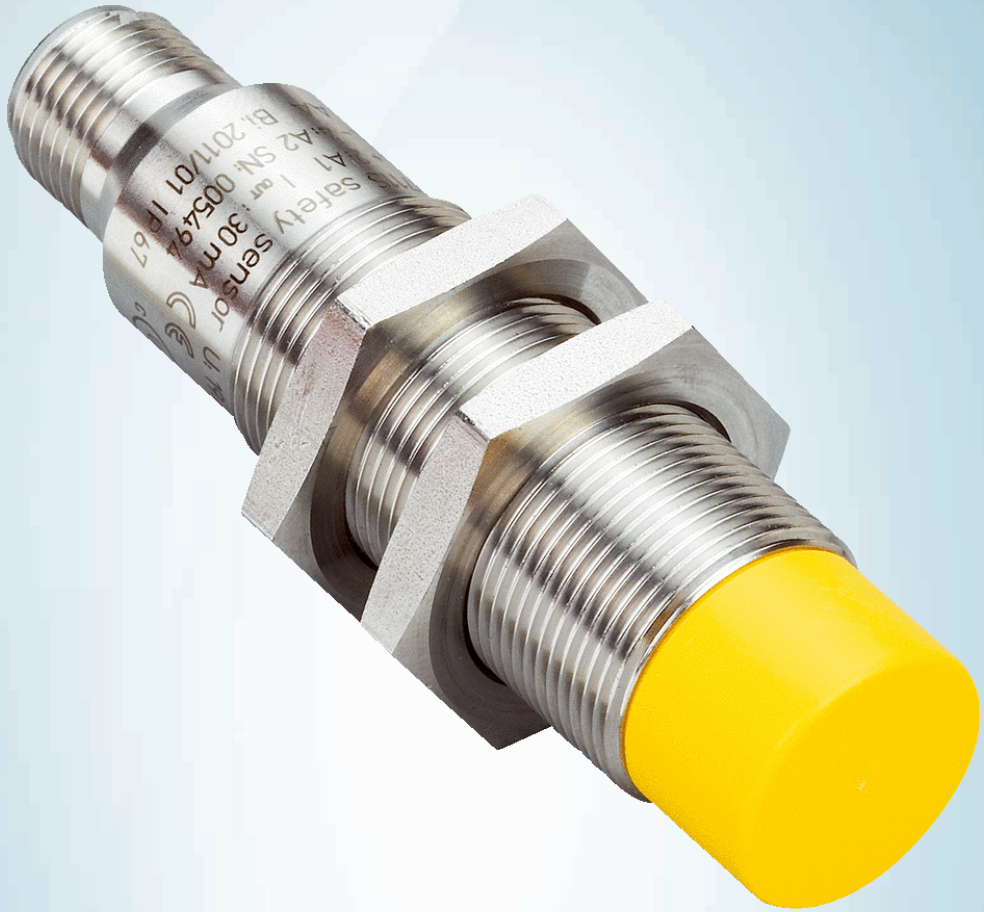

IN30-E0305K

IN3000 Direct

NON-CONTACT SAFETY SWITCHES

SICK
Sensor Intelligence.



Ordering information

Type	Part no.
IN30-E0305K	6034576

Other models and accessories ➜ www.sick.com/IN3000_Direct

Detailed technical data

Features

Sensor principle	Inductive
Number of safe outputs	2
Housing diameter	M18
Enable zone	1 mm ... 8 mm [1]
Safe switch off distance S_{ar}	12 mm
Actuation directions	5
Active sensor surfaces	1

[1] Values apply for steel (FE360).

Safety-related parameters

Safety integrity level	SIL2 (IEC 61508)
Category	Applicable up to category 3 (EN ISO 13849)
Performance level	PL d (EN ISO 13849)
PFH_D (mean probability of a dangerous failure per hour)	1.0×10^{-7} (EN ISO 13849)
T_M (mission time)	10 years (EN ISO 13849) [1] 20 years (EN ISO 13849) [2]
Type	Type 3 (EN ISO 14119)
Actuator coding level	Uncoded (EN ISO 14119)

[1] At –25 °C ... +70 °C and 5 % ... 95 % relative air humidity.
[2] At +10 °C ... +40 °C and 5 % ... 70 % relative air humidity.

Functions

Safe series connection	With Flexi Loop (with diagnostics)

Interfaces

Connection type	Plug connector, M12, 4-pin
Power indication	✓
Status display	✓

Electrical data

Protection class	III (EN 50178)
Supply voltage V_s	24 V DC (19.2 V DC ... 28.8 V DC)
Type of output	Semiconductor
Response time	≤ 1 ms

Mechanical data

Design	Cylindrical
Housing diameter	M18
Housing length	70.5 mm
Weight	0.1 kg
Material	
Housing	V4A (housing), PBT (cover)
Installation type	Non-flush

Ambient data

Enclosure rating	IP65 (IEC 60529) IP67
Ambient operating temperature	–25 °C ... +70 °C
Storage temperature	–25 °C ... +70 °C

Classifications

ECl@ss 5.0	27272401
ECl@ss 5.1.4	27272401
ECl@ss 6.0	27272401
ECl@ss 6.2	27272401
ECl@ss 7.0	27272401
ECl@ss 8.0	27272401
ECl@ss 8.1	27272401
ECl@ss 9.0	27272401
ECl@ss 10.0	27272401
ECl@ss 11.0	27272401
ECl@ss 12.0	27274101
ETIM 5.0	EC001818
ETIM 6.0	EC001818
ETIM 7.0	EC001818
ETIM 8.0	EC001818
UNSPSC 16.0901	39122205

Dimensional drawing (Dimensions in mm (inch))

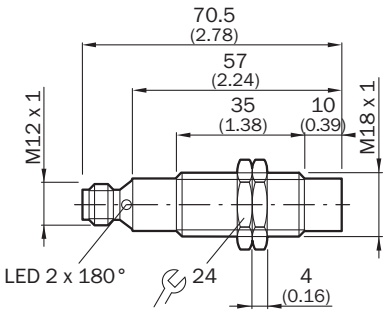

Response range

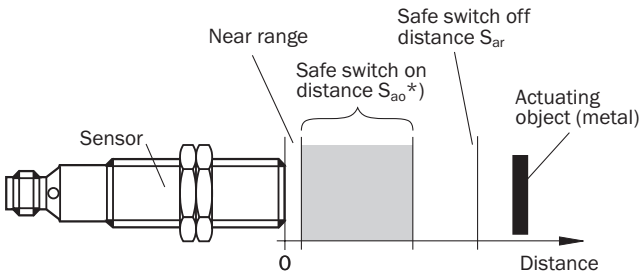

Material of the actuating object	Safe switch on distance S_{ao}*)	Safe switch off distance S_{ar}
Steel FE360	1.0 mm ... 8.0 mm	12 mm
Stainless steel 1.4302	0.5 mm ... 5.6 mm	
AlMg 3G22	0 mm ... 3.2 mm	
CuZn 37	0 mm ... 3.2 mm	
Cu	0 mm ... 2.4 mm	

*) Typical values for damping with a reference target plate of 24 x 24 x 1 mm and non-flush installation according to IEC 60947-5-2 at an ambient temperature of 20 °C.

Pin assignment

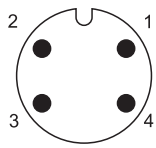

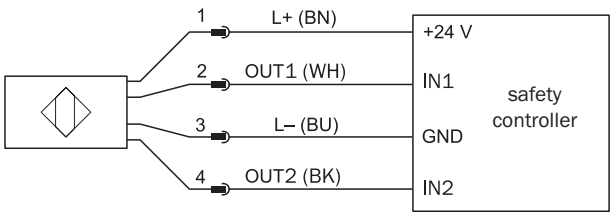

SICK AT A GLANCE

SICK is one of the leading manufacturers of intelligent sensors and sensor solutions for industrial applications. A unique range of products and services creates the perfect basis for controlling processes securely and efficiently, protecting individuals from accidents and preventing damage to the environment.

We have extensive experience in a wide range of industries and understand their processes and requirements. With intelligent sensors, we can deliver exactly what our customers need. In application centers in Europe, Asia and North America, system solutions are tested and optimized in accordance with customer specifications. All this makes us a reliable supplier and development partner.

Comprehensive services complete our offering: SICK LifeTime Services provide support throughout the machine life cycle and ensure safety and productivity.

For us, that is “Sensor Intelligence.”

WORLDWIDE PRESENCE:

Contacts and other locations –www.sick.com