Product data sheet



IQ08-02BPSKW2S

IQY

INDUCTIVE PROXIMITY SENSORS

SICK
Sensor Intelligence.



Illustration may differ

Ordering information

Type	Part no.
IQ08-02BPSKW2S	1055490

Other models and accessories ➜ www.sick.com/IQY

Detailed technical data

Features

Housing	Rectangular
Dimensions (W x H x D)	8 mm x 40 mm x 8 mm
Sensing range S_n	2 mm
Safe sensing range S_a	1.62 mm
Installation type	Flush
Switching frequency	2,000 Hz
Connection type	Cable, 3-wire, 2 m
Switching output	PNP
Output function	NO
Electrical wiring	DC 3-wire
Enclosure rating	IP67, IP68 [1]

[1] According to EN 60529.

Mechanics/electronics

Supply voltage	10 V DC ... 30 V DC
Ripple	≤ 10 % [1]
Voltage drop	≤ 2 V [2]
Time delay before availability	≤ 100 ms
Hysteresis	5 % ... 15 %
Reproducibility	≤ 2 % [3] [4]

[1] Of V_S.
[2] At I_a max.
[3] Ub and Ta constant.
[4] Of Sr.

Temperature drift (of S_r)	± 10 %
EMC	According to EN 60947-5-2
Continuous current I_a	≤ 200 mA
Cable material	PVC
Conductor size	0.14 mm²
Cable diameter	Ø 2.9 mm
Short-circuit protection	✓
Reverse polarity protection	✓
Power-up pulse protection	✓
Shock and vibration resistance	30 g, 11 ms / 10 ... 55 Hz, 1 mm
Ambient operating temperature	–25 °C ... +75 °C
Housing material	Plastic, VISTAL®
Sensing face material	Plastic, VISTAL®
Tightening torque, max.	≤ 1.5 Nm
UL File No.	NRKH.E348498

[1] Of V_S.
[2] At I_a max.
[3] Ub and Ta constant.
[4] Of Sr.

Safety-related parameters

$MTTF_D$	1,730 years
DC_{avg}	0 %
T_M (mission time)	20 years

Reduction factors

Note	The values are reference values which may vary
Stainless steel (V2A, 304)	Approx. 0.7
Aluminum (Al)	Approx. 0.3
Copper (Cu)	Approx. 0.2
Brass (Br)	Approx. 0.3

Installation note

Remark	Associated graphic see "Installation"
A	0 mm
B	10 mm
C	8 mm
D	6 mm
E	0 mm
F	16 mm
G	0 mm

Classifications

ECl@ss 5.0	27270101
ECl@ss 5.1.4	27270101

ECl@ss 6.0	27270101
ECl@ss 6.2	27270101
ECl@ss 7.0	27270101
ECl@ss 8.0	27270101
ECl@ss 8.1	27270101
ECl@ss 9.0	27270101
ECl@ss 10.0	27270101
ECl@ss 11.0	27270101
ECl@ss 12.0	27274001
ETIM 5.0	EC002714
ETIM 6.0	EC002714
ETIM 7.0	EC002714
ETIM 8.0	EC002714
UNSPSC 16.0901	39122230

Installation note

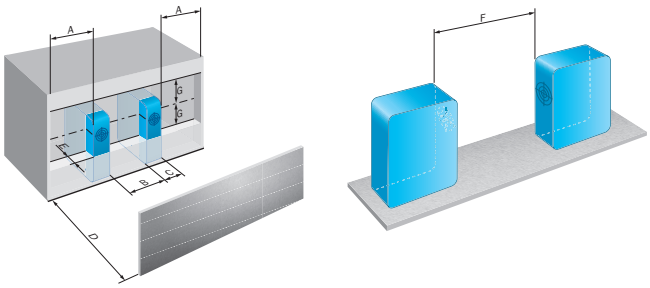

Connection diagram

Cd-001

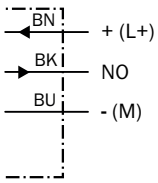

Dimensional drawing (Dimensions in mm (inch))

IQ08, cable

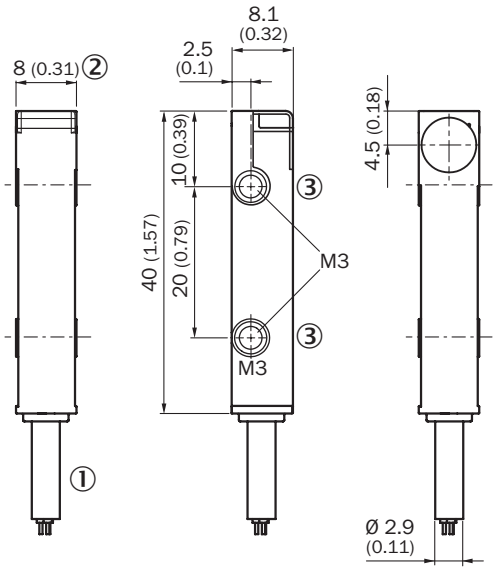

① Connection
② LED indicator 270°
③ Threaded mounting hole M3

SICK AT A GLANCE

SICK is one of the leading manufacturers of intelligent sensors and sensor solutions for industrial applications. A unique range of products and services creates the perfect basis for controlling processes securely and efficiently, protecting individuals from accidents and preventing damage to the environment.

We have extensive experience in a wide range of industries and understand their processes and requirements. With intelligent sensors, we can deliver exactly what our customers need. In application centers in Europe, Asia and North America, system solutions are tested and optimized in accordance with customer specifications. All this makes us a reliable supplier and development partner.

Comprehensive services complete our offering: SICK LifeTime Services provide support throughout the machine life cycle and ensure safety and productivity.

For us, that is “Sensor Intelligence.”

WORLDWIDE PRESENCE:

Contacts and other locations –www.sick.com