Sep.1.2022 Copyright 2022 HIROSE ELECTRIC CO., LTD. All Rights Reserved.
In case of consideration for using Automotive equipment / device which demand high reliability, kindly contact our sales window correspondents.

	COUNT	DESCRIPTION OF REVISIONS	BY	CHKD	DATE		COUNT	DESCRIPTION OF REVISIONS	BY	CHKD	DATE
△					. .	△					. .
△					. .	△					. .
△					. .	△					. .

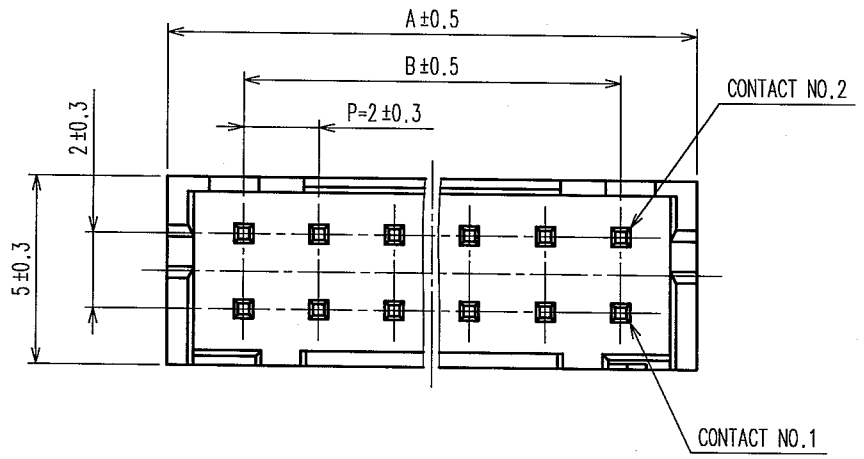

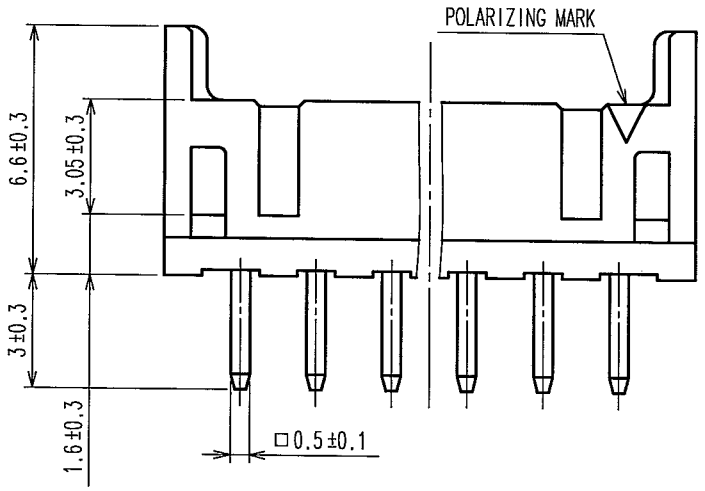

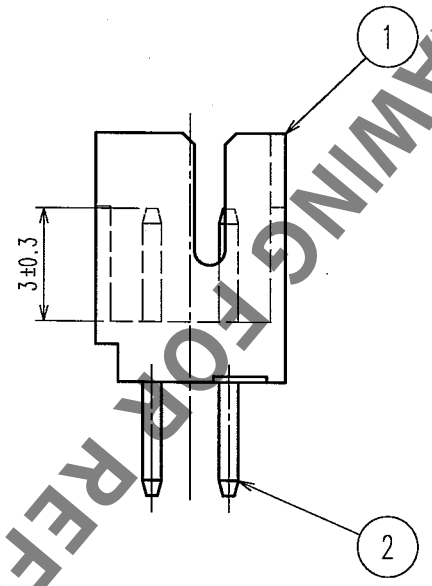

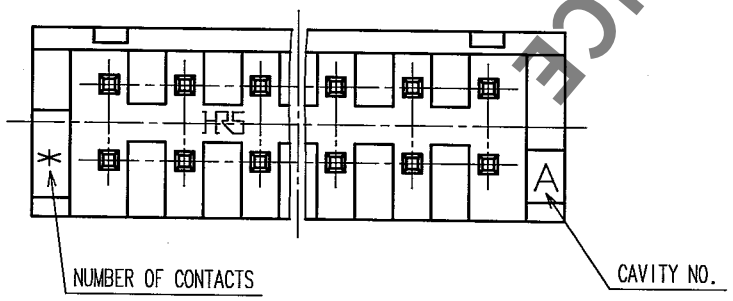

HRS NO	PART NO	NUMBER OF CONTACT	A	B
CL543-0517-5-24	DF11- 4DP-2DSA(24)	4	6.0	2.0
CL543-0518-8-24	DF11- 6DP-2DSA(24)	6	8.0	4.0
CL543-0519-0-24	DF11- 8DP-2DSA(24)	8	10.0	6.0
CL543-0520-0-24	DF11-10DP-2DSA(24)	10	12.0	8.0
CL543-0521-2-24	DF11-12DP-2DSA(24)	12	14.0	10.0
CL543-0522-5-24	DF11-14DP-2DSA(24)	14	16.0	12.0
CL543-0523-8-24	DF11-16DP-2DSA(24)	16	18.0	14.0
CL543-0524-0-24	DF11-18DP-2DSA(24)	18	20.0	16.0
CL543-0525-3-24	DF11-20DP-2DSA(24)	20	22.0	18.0
CL543-0526-6-24	DF11-22DP-2DSA(24)	22	24.0	20.0
CL543-0527-9-24	DF11-24DP-2DSA(24)	24	26.0	22.0
CL543-0528-1-24	DF11-26DP-2DSA(24)	26	28.0	24.0
CL543-0529-4-24	DF11-28DP-2DSA(24)	28	30.0	26.0
CL543-0530-3-24	DF11-30DP-2DSA(24)	30	32.0	28.0
CL543-0531-6-24	DF11-32DP-2DSA(24)	32	34.0	30.0

FOR REFERENCE

RECOMMENDED PATTERN

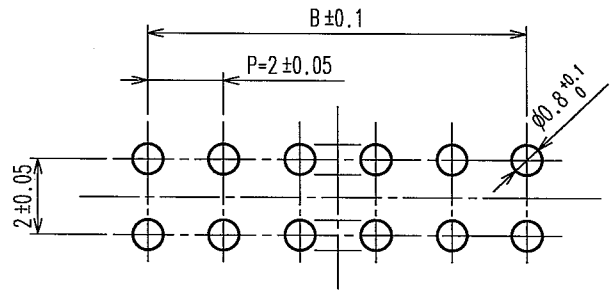

NO.	MATERIAL	FINISH, REMARKS	NO.	MATERIAL	FINISH, REMARKS
2	BRASS	SURFACE:TIN PLATED 1μm min UNDER PLATING::NICKEL PLATED 0.5μm min	4	S.PVC	STOPPER,GRAY
1	POLYAMIDE	BLACK,UL94V-0	3	R.PVC	ELECTROSTATIC PROTECTION(CLEAR)

CODE NO.(OLD)	DRAWN	DESIGNED	CHECKED	APPROVED	RELEASED
CL	M.MATSUO 05.08.01	S.Denpouji '05.08.11	H.Umehara '05.08.11	T.Ono '05.08.11	

SCALE 5 : 1	DRAWING NO. EDC3-162391-03	PART NO. DF11-*DP-2DSA(24)
UNITS mm	HRS HIROSE ELECTRIC CO., LTD	CODE NO. CL543- 1/2

TO

Sep.1.2022 Copyright 2022 HIROSE ELECTRIC CO., LTD. All Rights Reserved.
In case of consideration for using Automotive equipment / device which demand high reliability, kindly contact our sales window correspondents.

	COUNT	DESCRIPTION OF REVISIONS	BY	CHKD	DATE		COUNT	DESCRIPTION OF REVISIONS	BY	CHKD	DATE
△					. .	△					. .
△					. .	△					. .
△					. .	△					. .

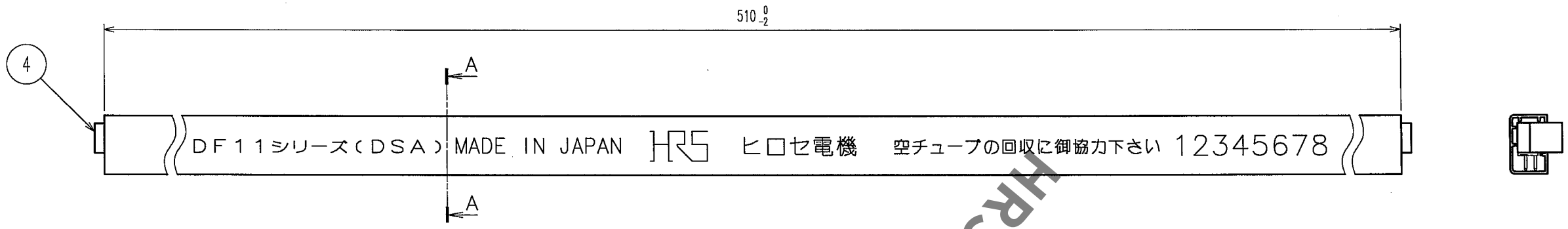

A-A(10:1)

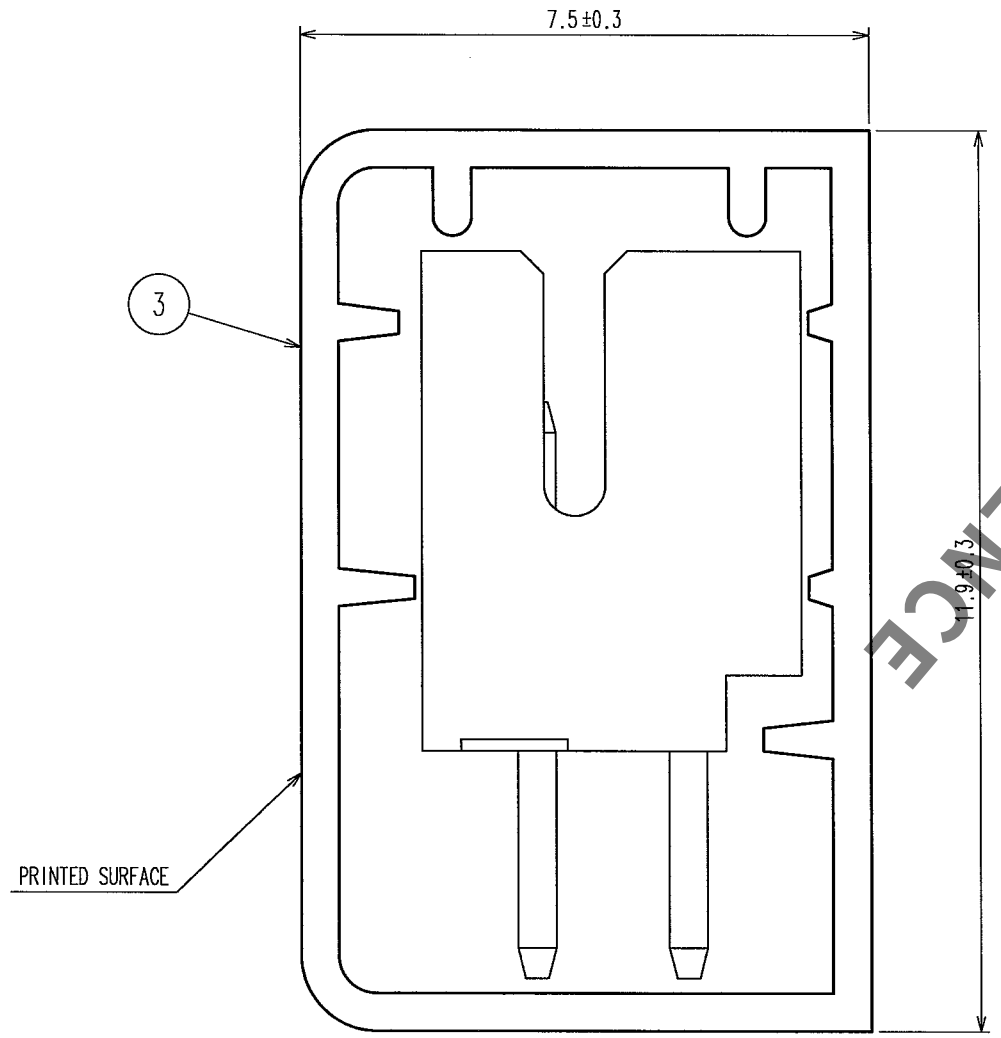

CODE No.	PART No.	NUMBER OF CONTACTS	QUANTITY OF CONNECTOR
CL543-0517-5-24	DF11- 4P-2DSA(24)	4	81
CL543-0518-8-24	DF11- 6P-2DSA(24)	6	61
CL543-0519-0-24	DF11- 8P-2DSA(24)	8	48
CL543-0520-0-24	DF11-10P-2DSA(24)	10	40
CL543-0521-2-24	DF11-12P-2DSA(24)	12	34
CL543-0522-5-24	DF11-14P-2DSA(24)	14	30
CL543-0523-8-24	DF11-16P-2DSA(24)	16	27
CL543-0524-0-24	DF11-18P-2DSA(24)	18	24
CL543-0525-3-24	DF11-20P-2DSA(24)	20	22
CL543-0526-6-24	DF11-22P-2DSA(24)	22	20
CL543-0527-9-24	DF11-24P-2DSA(24)	24	18
CL543-0528-1-24	DF11-26P-2DSA(24)	26	17
CL543-0529-4-24	DF11-28P-2DSA(24)	28	16
CL543-0530-3-24	DF11-30P-2DSA(24)	30	15
CL543-0531-6-24	DF11-32P-2DSA(24)	32	14

NOTES 1.THE TUBE HAS ONE STOPPER AT EACH END.
2.WARPAGE,BENT OF THE TUBE SHALL BE ALLOWED ±2mm PER 510mm.
3.MINIMUM UNIT OF PURCHASE SHALL BE THE QUANTITY OF CONNECTORS IN TUBE.
4.THE SUFFIX OF CODE No. SHALL BE '-24'.

HRS DRAWING FOR REFERENCE

TO

CODE NO.(OLD)	DRAWN	DESIGNED	CHECKED	APPROVED	RELEASED
	M.MATSUO	S.Denkouya	H.Uchehara	T.Ona	. .
	'05.08.01	'05.08.11	'05.08.11	'05.08.11	. .

SCALE FR:EE	DRAWING NO. EDC3-162391-03	PART NO. DF11-*DP-2DSA(24)
UNITS mm	HRS HIROSE ELECTRIC CO., LTD	CODE NO. CL543-

2