Sep.1.2022 Copyright 2022 HIROSE ELECTRIC CO., LTD. All Rights Reserved.
In case of consideration for using Automotive equipment / device which demand high reliability, kindly contact our sales window correspondents.

	COUNT	DESCRIPTION OF REVISIONS	BY	CHKD	DATE		COUNT	DESCRIPTION OF REVISIONS	BY	CHKD	DATE
△					. .	△					. .
△					. .	△					. .
△					. .	△					. .

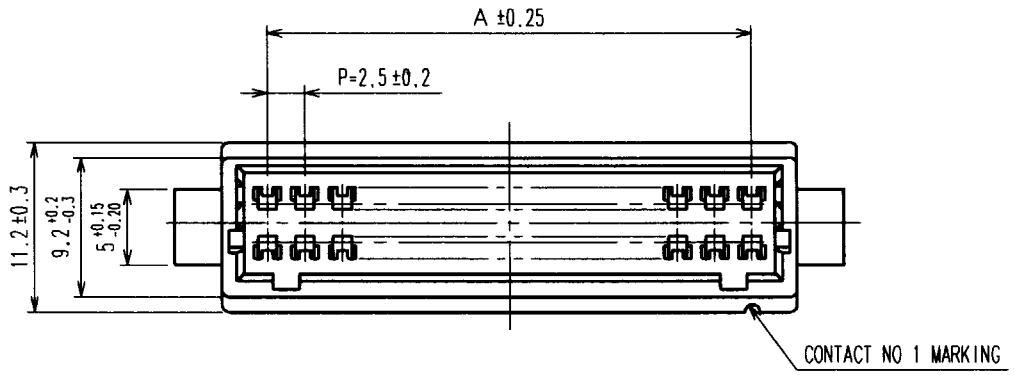

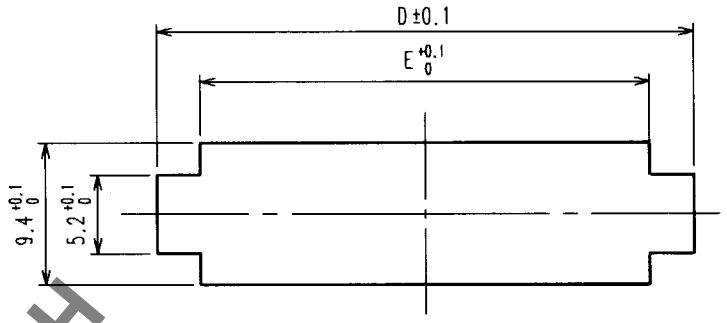

NOTE:WHEN YOU MOUNT DF1BA RELAY SOCKET ON A PANEL,PLEASE TAKE NOTE OF DIMENSIONS D, INDICATED IN THE TABLE ABOVE.BICAUSE THE CUT-OUT DIMENSION DEPENDS ON PANEL THICKNESS.
THE PANEL CUT OUT SHALL BE FREE FROM BURR.

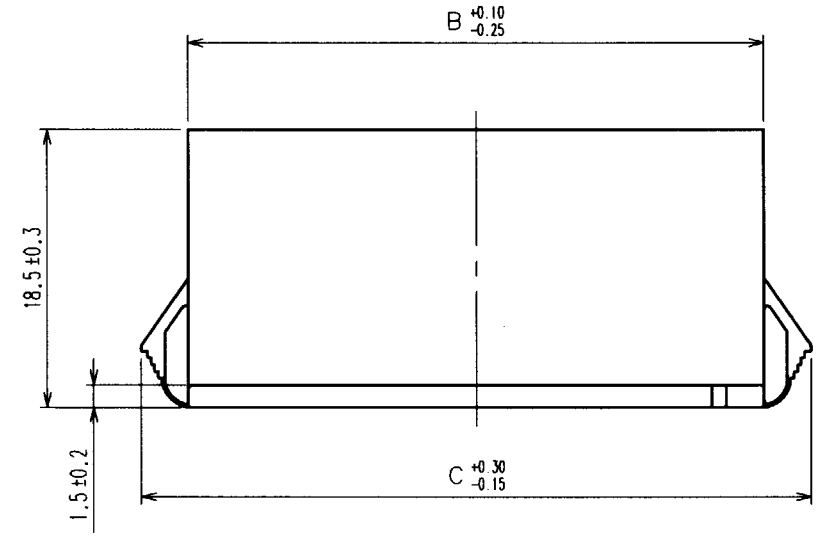

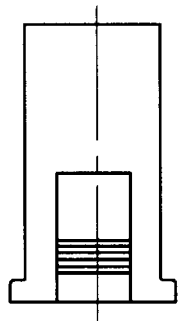

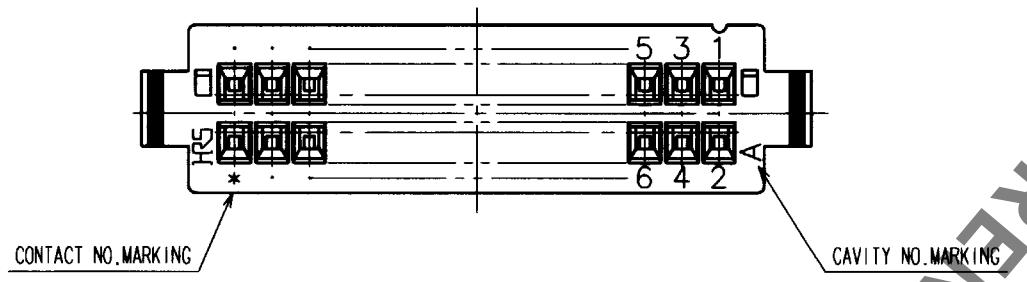

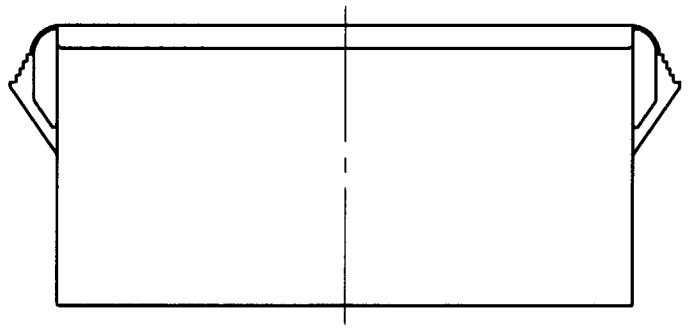

	PANEL CUT-OUT			
	PANEL THICKNESS			
	0.5~1.2	1.3~1.6	1.7~2.0	
製品コード 製品名 A B C	D	D	D	E
CL541-0719-7 DF1BA- 4DEP-2.5RC 2.5 8.6 15.0	12.7	13.4	14.1	8.8
CL541-0720-6 DF1BA- 6DEP-2.5RC 5.0 11.1 17.5	15.2	15.9	16.6	11.3
CL541-0721-9 DF1BA- 8DEP-2.5RC 7.5 13.6 20.0	17.7	18.4	19.1	13.8
CL541-0722-1 DF1BA-10DEP-2.5RC 10.0 16.1 22.5	20.2	20.9	21.6	16.3
CL541-0723-4 DF1BA-12DEP-2.5RC 12.5 18.6 25.0	22.7	23.4	24.1	18.8
CL541-0724-7 DF1BA-14DEP-2.5RC 15.0 21.1 27.5	25.2	25.9	26.6	21.3
CL541-0725-0 DF1BA-16DEP-2.5RC 17.5 23.6 30.0	27.7	28.4	29.1	23.8
CL541-0726-2 DF1BA-18DEP-2.5RC 20.0 26.1 32.5	30.2	30.9	31.6	26.3
CL541-0727-5 DF1BA-20DEP-2.5RC 22.5 28.6 35.0	32.7	33.4	34.1	28.8
CL541-0728-8 DF1BA-22DEP-2.5RC 25.0 31.1 37.5	35.2	35.9	36.6	31.3
CL541-0729-0 DF1BA-24DEP-2.5RC 27.5 33.6 40.0	37.7	38.4	39.1	33.8
CL541-0730-0 DF1BA-26DEP-2.5RC 30.0 36.1 42.5	40.2	40.9	41.6	36.3
CL541-0731-2 DF1BA-28DEP-2.5RC 32.5 38.6 45.0	42.7	43.4	44.1	38.8
CL541-0732-5 DF1BA-30DEP-2.5RC 35.0 41.1 47.5	45.2	45.9	46.6	41.3
CL541-0734-0 DF1BA-34DEP-2.5RC 40.0 46.1 52.5	50.2	50.9	51.6	46.3

NO.	MATERIAL	FINISH, REMARKS	NO.	MATERIAL	FINISH, REMARKS
			1	POLYAMIDE	NATURAL(WHITE)UL94V-0

CODE NO.(OLD)	DRAWN	DESIGNED	CHECKED	APPROVED	RELEASED
CL	M.KURAMASHI 03.07.14	T.Kamagawa 03.07.17	T.Miyazaki 03.07.17	T.Miyazaki 03.07.17	. .

SCALE 2 : 1	DRAWING NO. EDC3-160043-01	PART NO. DF1BA-*DEP-2.5RC
UNITS mm	HRS HIROSE ELECTRIC CO., LTD	CODE NO. CL541 1/1

TO

HRS DRAWING FOR REFERENCE