Oct.1.2022 Copyright 2022 HIROSE ELECTRIC CO., LTD. All Rights Reserved.
In case of consideration for using Automotive equipment / device which demand high reliability, kindly contact our sales window correspondents.

	COUNT	DESCRIPTION OF REVISIONS	BY	CHKD	DATE		COUNT	DESCRIPTION OF REVISIONS	BY	CHKD	DATE
1	2	RE-E-08445	M.K	A.N	02.02.22						. .
					. .						. .
					. .						. .

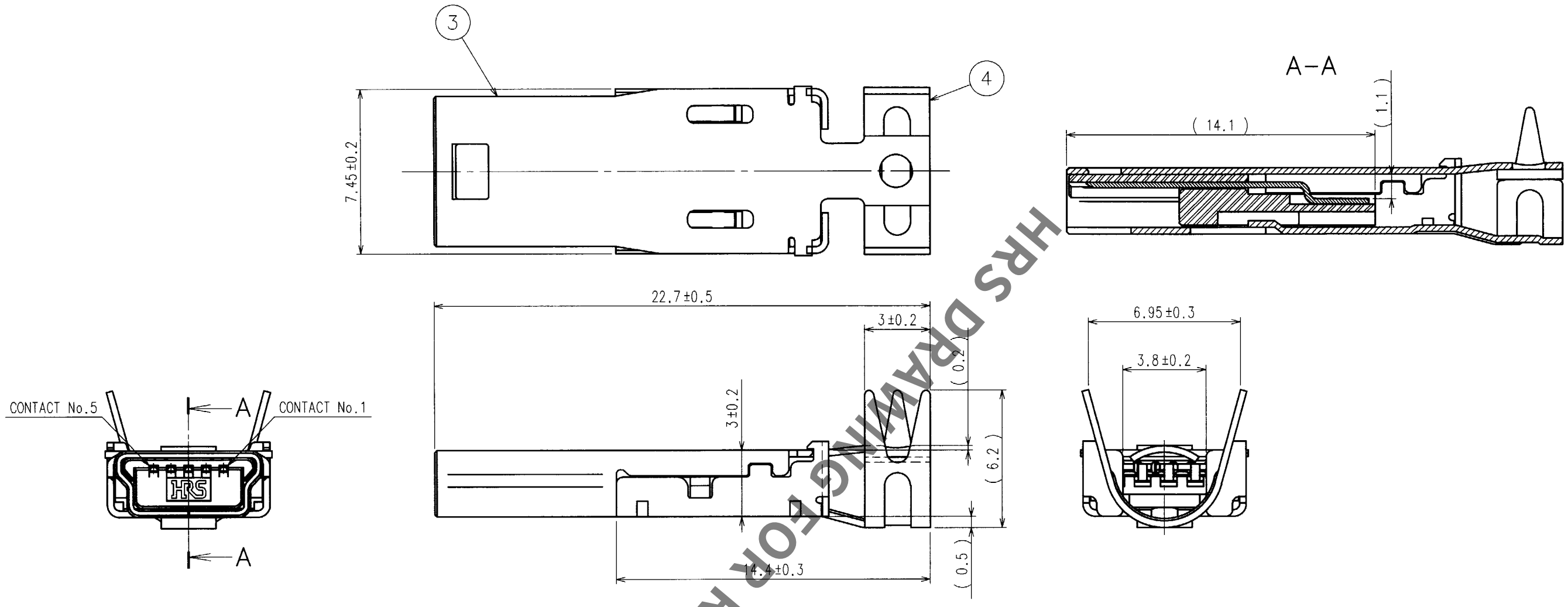

CONNECTOR UNIT

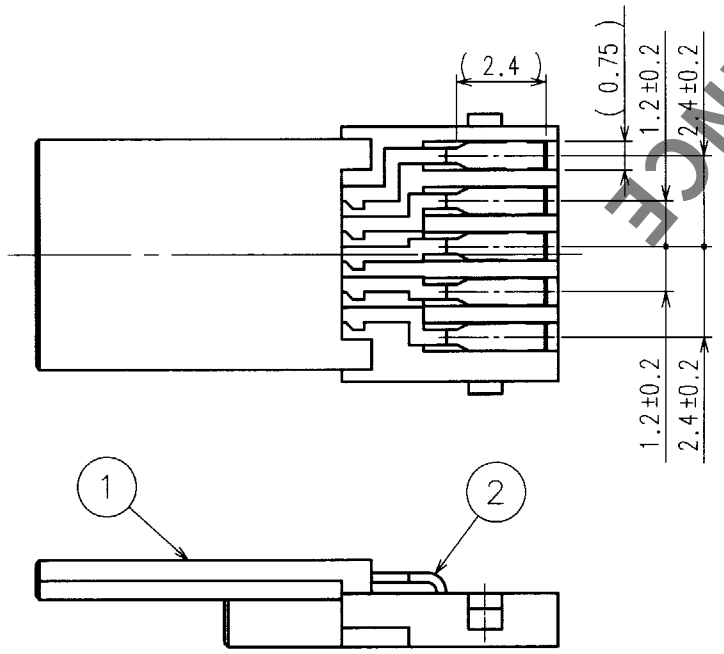

HRS DRAWING FOR REFERENCE

NOTES △1 1 INTERFACE DIMENSIONS CONFORM TO USB2.0 STANDARDS.(Mini-B)
2 COMPONENTS OF REF.NO.③AND④ARE APPENDED PRODUCTS.
△1 3 THE DIAMETER OF A CABLE SHOULD FOLLOW φ 3.5 TO φ 4.0 AS A GUIDE.
(IT CHANGES A LITTLE WITH HARDNESS OF A SHEATH ETC.)

NO.	MATERIAL	FINISH, REMARKS	NO.	MATERIAL	FINISH, REMARKS
2	COPPER ALLOY	SELECTED GOLD PLATING	4	STELL	TIN ALLOY PLANING
1	PBT	BLACK UL94V-0	3	STELL	TIN ALLOY PLATING

CODE NO.(OLD)	DRAWN	DESIGNED	CHECKED	APPROVED	RELEASED
	T.SAKAIZAWA 01.09.14	M.KENJO 01.09.14	A.SUZUKI 01.09.14	S.KIKUTA 01.09.14	. .

SCALE 5 : 1
UNITS mm

DRAWING NO. EDC3-123212

HRS HIROSE ELECTRIC CO., LTD

PART NO. UX40-MB-5P

CODE NO. CL240-0004-7

1/1

TO