ISP1507
Data Sheet

Bluetooth 5.0 Low Energy Module
Supporting Mesh, ANT, NFC
With built-in MCU & Antenna

This ultra-small LGA module, 8 x 8 x 1 mm, is based on the nRF52 Chip. Its powerful Cortex™ M4 CPU, flash and RAM memory combined with an optimized antenna offers the perfect solution for Bluetooth connectivity. The solution is best in class for RF performance and low power consumption. Multiple digital and analogue interfaces give optimum flexibility for sensor integration.

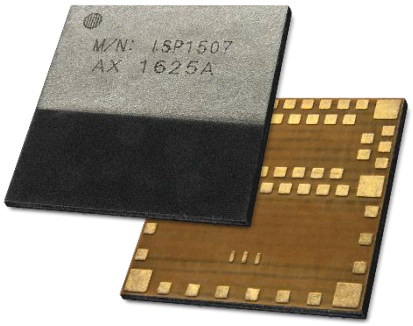

Key Features

- Multi-protocol 2.4GHz Ultra Low Power RF Transceiver based on Nordic Semiconductor nRF52
- Bluetooth 5.0 & Mesh
  ANT
  2.4 GHz proprietary protocol
- NFC-A Tag for OOB pairing in option
- Fully integrated RF matching and Antenna
- Integrated 32 MHz & 32kHZ Clock in option
- DC/DC converter with loading circuit
- 32-bit ARM Cortex M4 CPU
- 512 kB Flash and 64 kB SRAM
  or 192 kB Flash and 24 kB SRAM variants
- From 10 to 30 configurable GPIOs including from 2 to 8 ADCs
- Interfaces SPI, I2C, UART, PWM, PDM
- Single 1.7 to 3.6 V supply
- Very small size 8.0 x 8.0 x 0.95 mm
- Temperature -40 to +85 °C

Applications

- Connected sensors for medical devices, healthcare, sport, fitness, industrial …
- IoT applications, connected objects
- Wearable technology
- Home automation
- Beacons

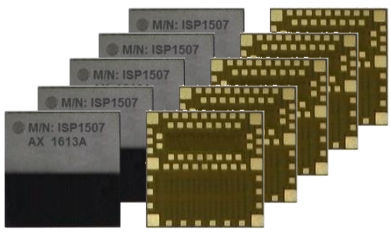

Certifications

- Fully FCC certified module
- Fully CE certified module
- Fully IC certified module
- Fully TELEC certified module
- Bluetooth SIG certified QDL listing
- RoHS compliant

The information contained in this document is the property of Insight SiP and should not be disclosed to any third party without written permission. Specification subject to change without notice.

Document Revision History

Revision	Date	Ref	Change Description
R0	15/02/2016	cr pg	Preliminary release
R1	16/06/2016	cr pg	RF specification update
R2	19/10/2016	cr pg	Marking update + schematic CIAA
R3	17/11/2016	cr pg	Marking update + RF exposure for FCC/IC
R4	24/11/2016	cr pg	Pin description update
R5	04/01/2017	cr pg	Current consumption update
R6	16/01/2017	cr pg	Bluetooth version update
R7	05/10/2017	cr pg	Reference design addition
R8	22/01/2018	cr pg	Max capacitance & inductance specification
R9	12/05/2018	cr pg	Addition of AL variant
R10	09/07/2018	cr pg	AL variant specification update
R11	19/10/2018	cr pg	Supply voltage update
R12	14/12/2018	cr pg	Electrical spec update + new reference design
R13	16/10/2019	mm pg	Upgrade to MSL 3
R14	15/10/2020	ys pg	Addition of AC variant + Power consumption update
R15	26/01/2022	cb pg	Certification list update
R16	18/02/2022	ys pg	Marking evolution
R17	13/04/2022	cb pg	Removal of AC variant + Certification list update
R18	29/04/2022	pd pg	Document layout update

The information contained in this document is the property of Insight SiP and should not be disclosed to any third party without written permission.
Specification subject to change without notice.

Contents

1. Block Diagram & Features 4
2. Specifications 6
2.1. General Notice 6
2.2. Absolute Maximum Ratings 6
2.3. Operating Conditions 6
2.4. Power Consumption 7
2.5. Clock Sources 7
2.6. Radio Specifications 7
2.7. Electrical Schematic 10
3. Pin Description 13
4. Mechanical Outlines 15
4.1. Mechanical Dimensions 15
4.2. SMT Assembly Guidelines 16
4.3. Antenna Keep-Out Zone 16
5. Product Development Tools 17
5.1. Hardware 17
5.2. Firmware 17
5.3. Development Tools 19
6. Reference Designs 20
6.1. Beacon Design 20
6.2. Sensor Board Design 21
7. Packaging & Ordering information 24
7.1. Marking 24
7.2. Prototype Packaging 24
7.3. Jedec Trays 24
7.4. Tape and Reel 25
7.5. Ordering Information 26
8. Storage & Soldering information 27
8.1. Storage and Handling 27
8.2. Moisture Sensitivity 27
8.3. Soldering information 28
9. Quality & User information 29
9.1. Certifications 29
9.2. USA – User information 29
9.3. Canada – User information 30
9.4. RF Exposure Information 30
9.5. Informations concernant l'exposition aux fréquences radio (RF) 30
9.6. Discontinuity 30
9.7. Disclaimer 31

The information contained in this document is the property of Insight SiP and should not be disclosed to any third party without written permission.
Specification subject to change without notice.

1. Block Diagram & Features

This module is based on nRF52 Nordic Semiconductor 2.4GHz wireless System on Chip (SoC) integrating a 2.4 GHz transceiver, a 32-bit ARM Cortex™-M4 CPU, flash and RAM memory, and analog and digital peripherals.

It can support BLE, Mesh, ANT and a range of proprietary 2.4 GHz protocols, such as ShockBurst. Fully qualified stacks for nRF52 are freely available for operating in Central role, Peripheral role, Scanning and Advertising.

Ultra-low power consumption and advanced power management enables battery lifetimes up to several years on a coin cell battery. Even though its very small size 8 x 8 x 0.95 mm, the module integrates, in addition to the wireless SoC, all required decoupling and load capacitors, DC-DC converter, 32 MHz crystal, 32.768 kHz optional crystal , RF matching circuit and antenna.

Only the addition of a suitable DC power source is necessary for module connectivity. Sensor applications require the further addition of appropriate sensors. The antenna was designed to be optimized with several standard ground plane sizes. When NFC function is available, the NFC tag antenna can be connected externally.

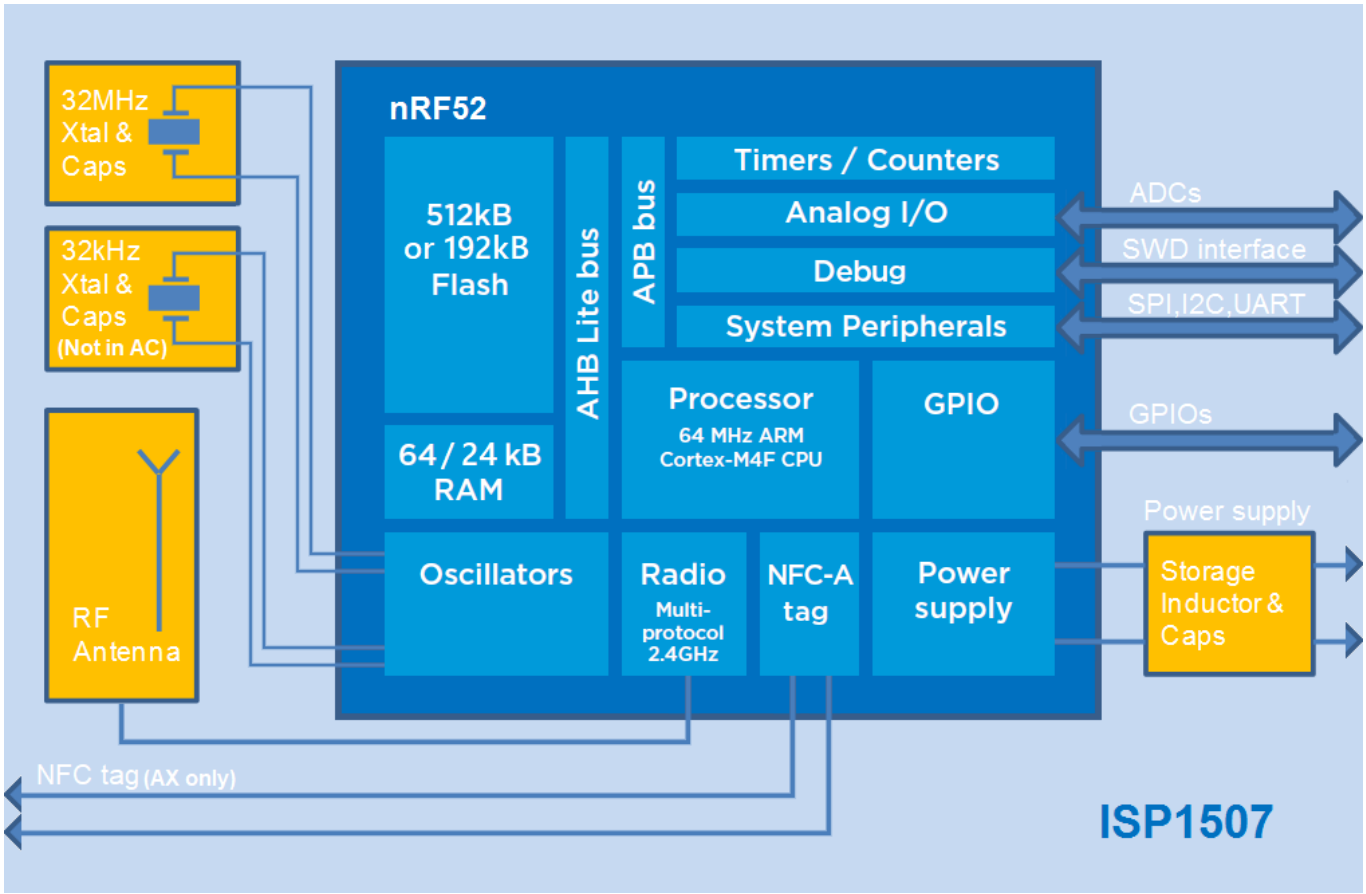

The information contained in this document is the property of Insight SiP and should not be disclosed to any third party without written permission.
Specification subject to change without notice.

The main features versus the different variants are described in the table below.

Module Type	iSP1507-AC	iSP1507-AL	iSP1507-AX
Specification	BT 5.0	BT 5.0	BT 5.0
Features	BLE	BLE	BLE & Mesh
Other protocol	-	ANT	ANT
Tx Power	+4 dBm	+4 dBm	+4 dBm
Data rate	2 Mbps	2 Mbps	2 Mbps
SoftDevice	S112/S113	S112/S113	S112/S113/S132
Processor	32-bit ARM Cortex M4	32-bit ARM Cortex M4	32-bit ARM Cortex M4F
Flash / RAM	192 kB / 24 kB	192 kB / 24 kB	512 kB / 64 kB
GPIOs	10	13	30
ADCs	2	3	8
SPI	Yes	Yes	Yes
NFC tag	No	No	Yes
USB	No	No	No
Other	UART, PWM, PDM	UART, PWM, PDM	UART, PWM, PDM
Power Supply	1.7-3.6 V + LDO/DCDC	1.7-3.6 V + LDO/DCDC	1.7-3.6 V + LDO/DCDC
Crystals	32 MHz	32 MHz & 32 kHz	32 MHz & 32 kHz
Size (mm)	8 x 8 x 0.95	8 x 8 x 0.95	8 x 8 x 0.95
Temperature	85°C	85°C	85°C

The information contained in this document is the property of Insight SiP and should not be disclosed to any third party without written permission.
Specification subject to change without notice.

2. Specifications

2.1. General Notice

The electrical specifications of the module are directly related to the Nordic Semiconductor specifications for nRF52 chipset series. Bellow information is only a summary of the main parameters. For more detailed information, especially about current consumption, please refer to the up-to-date specification of the chipset available on Nordic Semi website.

2.2. Absolute Maximum Ratings

Parameter	Min	Typ	Max	Unit
Supply Voltage respect to ground - VCC	-0.3		3.9	V
IO Pin Voltage	-0.3		3.9	V
RF Input Level			10	dBm
NFC Antenna pin current			80	mA
Module Total Capacity			2.5	µF
Module Total Inductance			15	µH
Storage Temperature	-40		+125	°C
Moisture Sensitivity Level			5	-
ESD Human Body Model			4000	V
ESD Charged Device Model			750	V
Flash Endurance			10000	cycles



ATTENTION

CONSERVE PRECAUTIONFOR HANDLING
ELECTROSTATIC SENSITIVE DEVICES
Human Body Model Class 3A

2.3. Operating Conditions

Parameter	Min	Typ	Max	Unit
Operating Supply Voltage, independent of DCDC enable	1.7	3.0	3.6	V
Extended Industrial Operating Temperature Range	-40	+25	+85	°C

The information contained in this document is the property of Insight SiP and should not be disclosed to any third party without written permission.
Specification subject to change without notice.

2.4. Power Consumption

Parameter	Typ AC variant	Typ AL variant	Typ AX variant	Unit
Peak current, Receiver active (1)	6.1	6.1	6.5	mA
Peak current, Transmitter active -40 dBm Output Power (2)	3.4	3.4	4.1	mA
Peak current, Transmitter active 0 dBm Output Power (2)	5.8	5.8	7.1	mA
System OFF, no RAM retention, wake on reset	0.3	0.3	0.3	µA
System ON, full RAM retention, wake on any event	0.8	0.8	1.5	µA
Additional RAM retention current per 4 KB block	40	40	40	nA

(1) DCDC enable, Power supply 3V, 1 Mbps
(2) DCDC enable, Power supply 3V

2.5. Clock Sources

Parameter	Max	Unit
Internal High Frequency Clock for RF Stability: 32 MHz Crystal Frequency Tolerance (1)	+/- 40	ppm
Internal Low Frequency Clock for BLE Synchronization: 32.768 kHz Crystal Frequency Tolerance (1) (3)	+/- 40	ppm
Internal Low Frequency Clock for BLE Synchronization: RC Oscillator (2)	+/- 250	ppm
RF Frequency tolerance: For BLE operation Channels 0 to 39	+/- 40	ppm

(1) Including initial tolerance, drift, aging, and frequency pulling
(2) Frequency tolerance after calibration
(3) The Low Frequency Clock 32.768 kHz is not present in AC variant

2.6. Radio Specifications

Parameter	Min	Typ	Max	Unit
Frequency Range	2402		2480	Mhz
Channel 0 to 39 Spacing		2		Mhz
Output Power Channels 0 to 39	-20		+4	dBm
Rx sensitivity Level for BER <0,1% ideal Tx	-96			dBm
Antenna Gain		0.6		dBi
EIRP	-19.4		4.6	dBm
Range Open field @1m height		100		m
Data Rate	1000 / 2000			kbps

The information contained in this document is the property of Insight SiP and should not be disclosed to any third party without written permission.
Specification subject to change without notice.

Typical Antenna Return Loss

Module mounted on a USB dongle ground plane

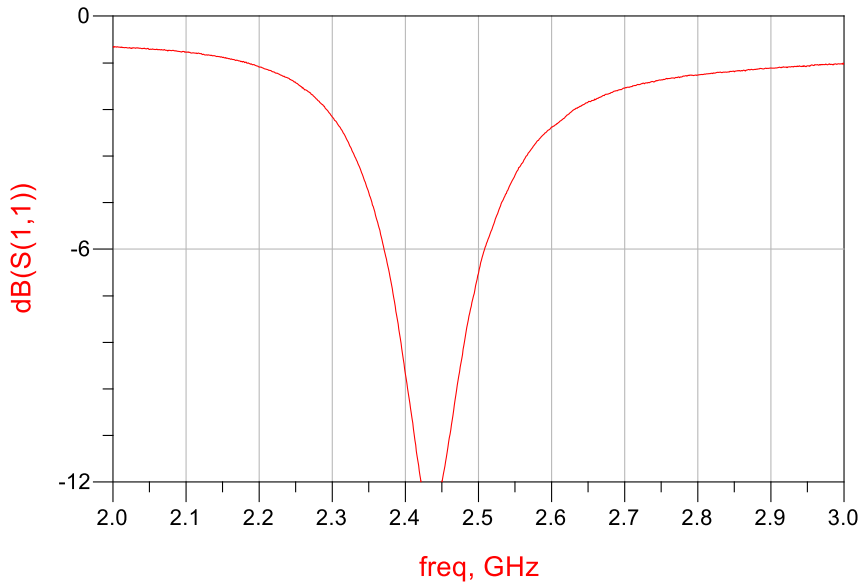

Radiation Pattern in 3 planes

Module mounted on a USB dongle ground plane

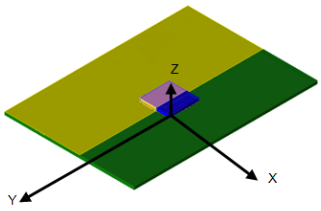

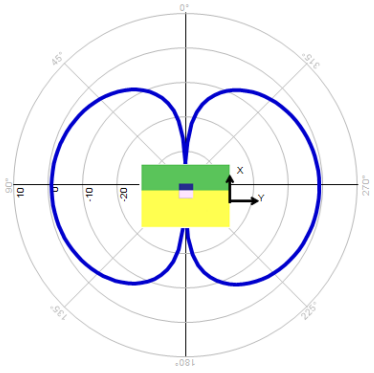

Phi (0.000 to 360.000)

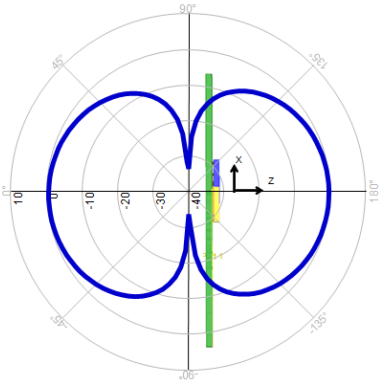

Thêta (-180.000 to 180.000)

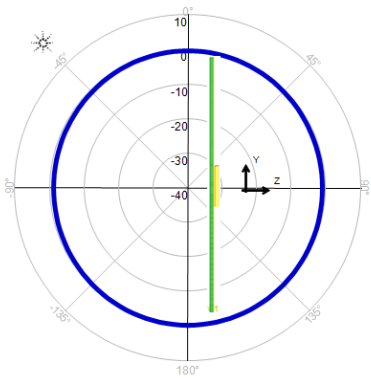

Thêta (-180.000 to 180.000)

Gain measurement in dBi @ 2.45 GHz.

The information contained in this document is the property of Insight SiP and should not be disclosed to any third party without written permission.
Specification subject to change without notice.

Ground Plane Effect Simulation

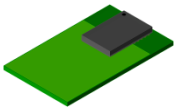

USB dongle
ground plane
(size: 18 x 30 mm²)

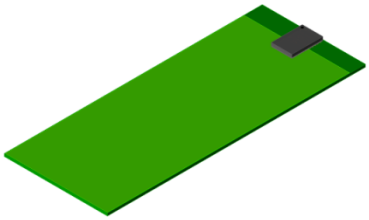

Cell phone config 1
ground plane
(size: 40 x 100 mm²)

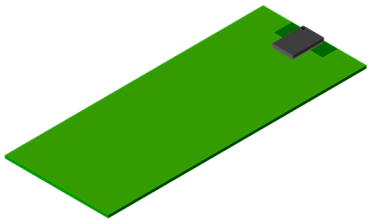

Cell phone config 1 with
side ground plane
(size: 40 x 100 mm²)

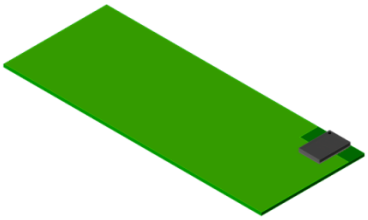

Cell phone config 2 with
side ground plane
(size: 40 x 100 mm²)

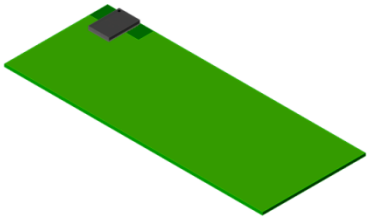

Cell phone config 3 with
side ground plane
(size: 40 x 100 mm²)

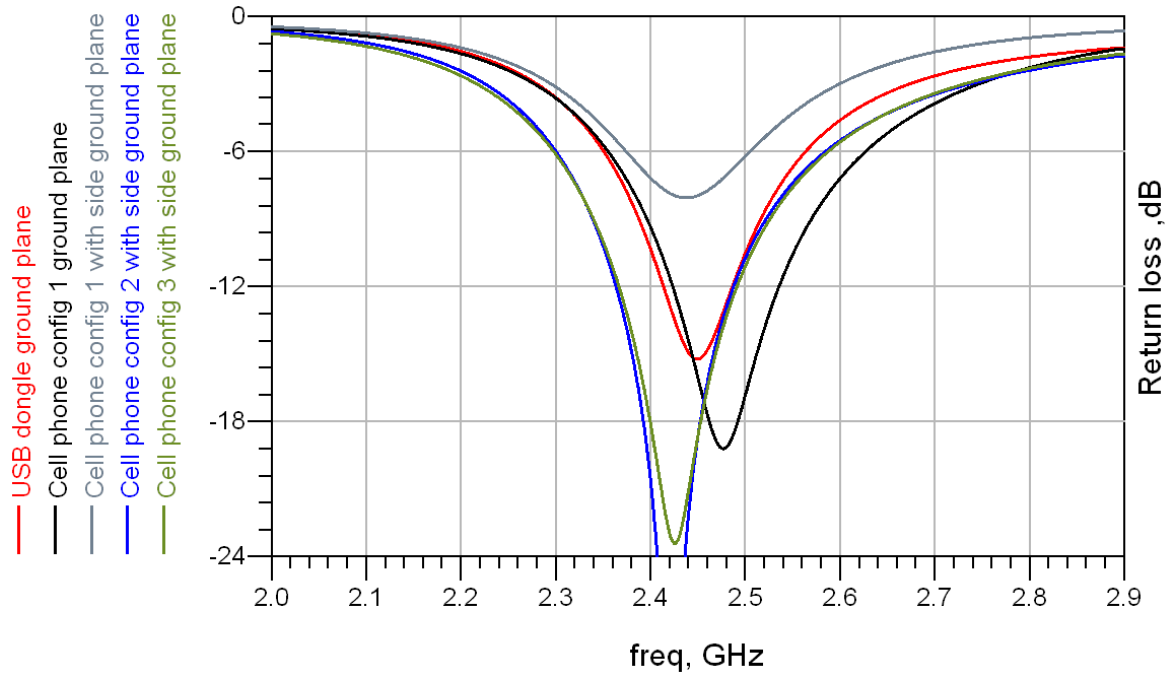

The information contained in this document is the property of Insight SiP and should not be disclosed to any third party without written permission.
Specification subject to change without notice.

2.7. Electrical Schematic

AC variant

Hereafter electrical schematic is showing ISP1507-AC module connections. For further information on electrical performance, please note that AC version is based on nRF52805-CAAA chipset.

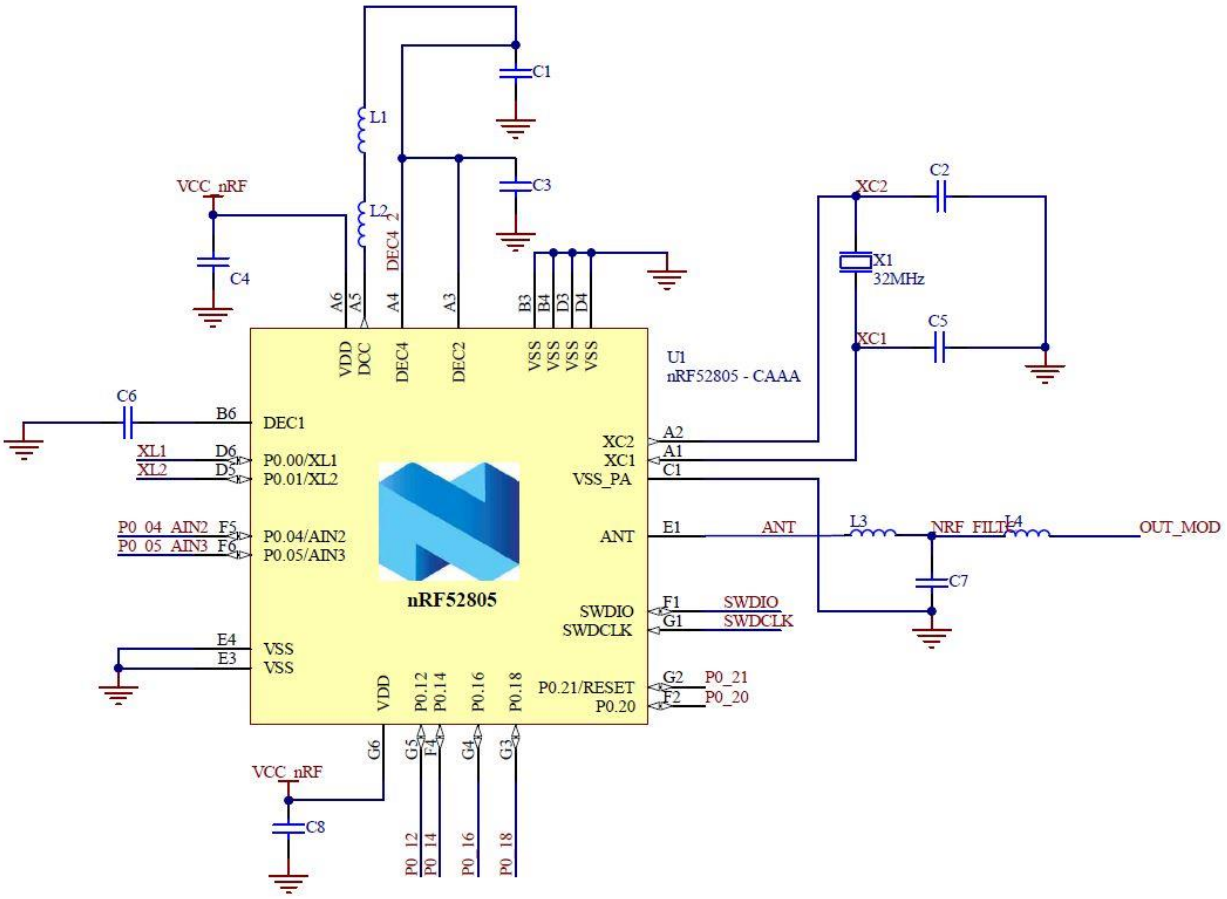

The information contained in this document is the property of Insight SiP and should not be disclosed to any third party without written permission.
Specification subject to change without notice.

AL variant

Hereafter electrical schematic is showing ISP1507-AL module connections. For further information on electrical performance, please note that AL variant is based on nRF52810-CAAA chipset.

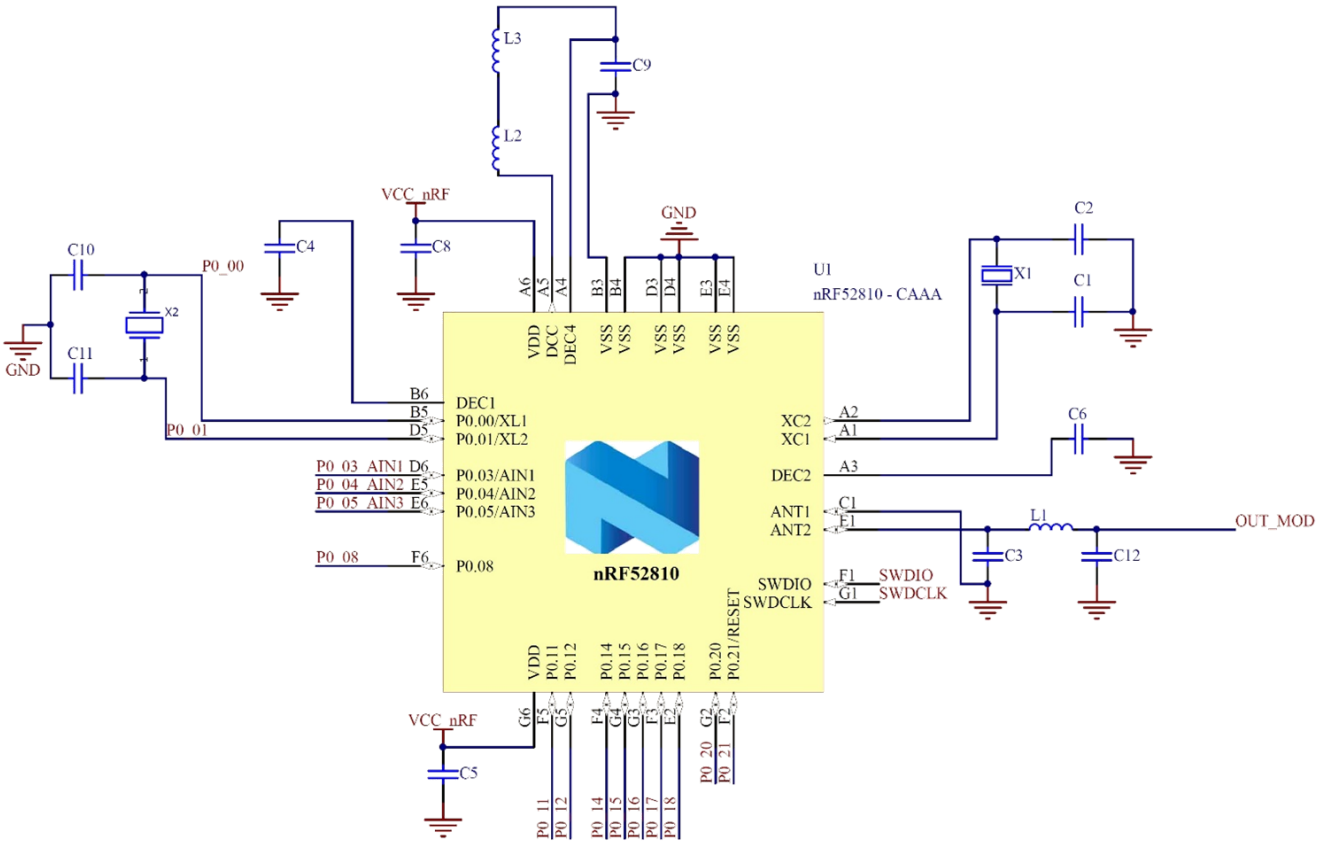

The information contained in this document is the property of Insight SiP and should not be disclosed to any third party without written permission.
Specification subject to change without notice.

AX variant

Hereafter electrical schematic is showing ISP1507-AX module connections. For further information on electrical performance, please note that AX variant is based on nRF52832-CIAA chipset.

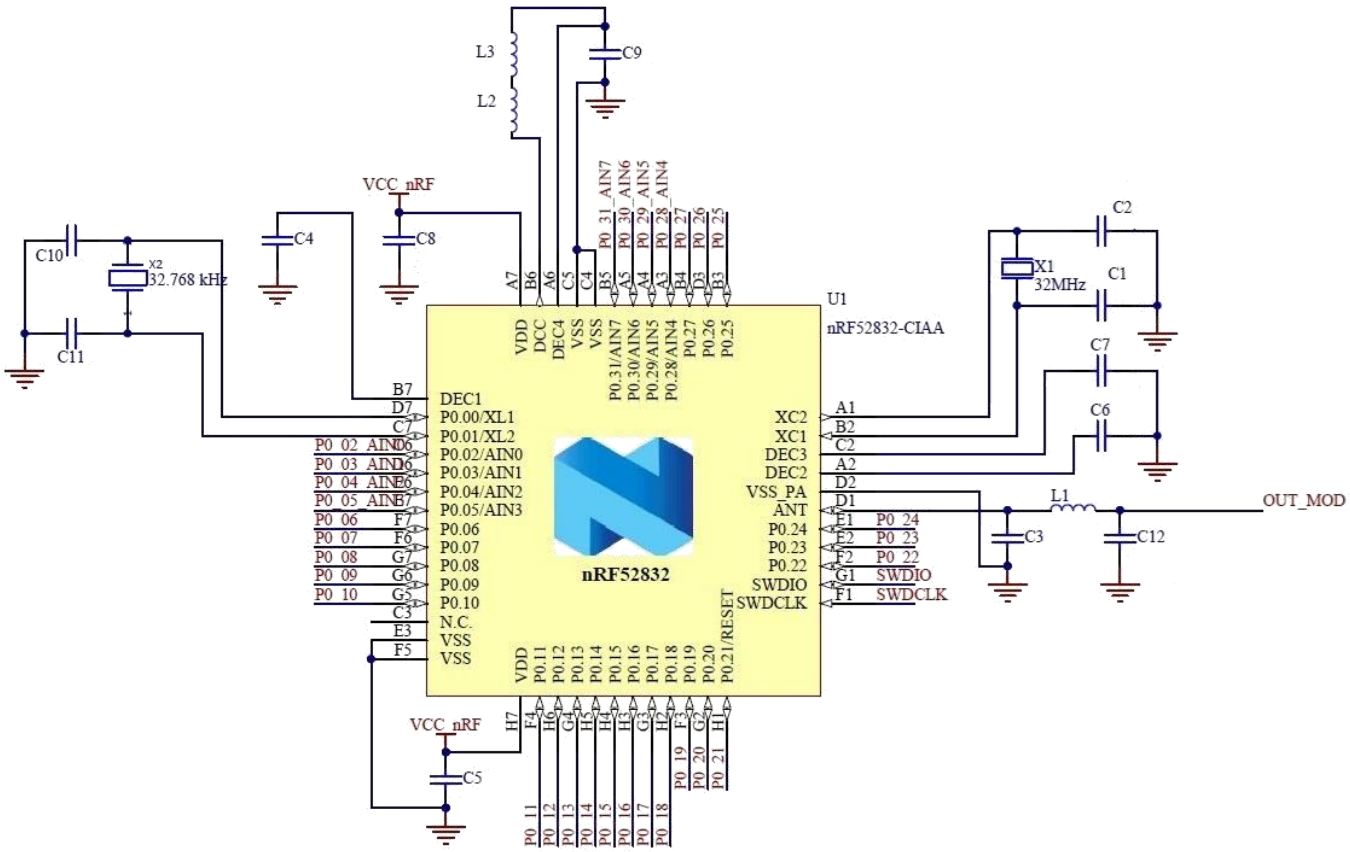

The information contained in this document is the property of Insight SiP and should not be disclosed to any third party without written permission.
Specification subject to change without notice.

3. Pin Description

The module uses an LGA format with a double row of pads on a 0.65 mm pitch.
Not Connected pads must be connected to isolated metal pads on the application PCB.
Not Applicable pads are not available in the related module variant.

Pin	Type	AL variant	AX variant
1	Ground	VSS	VSS
2	General purpose I/O	P0_12	P0_09
	NFC antenna connection	*not applicable*	NFC1
3	General purpose I/O	*not connected*	P0_12
4	General purpose I/O	P0_14	P0_10
	NFC antenna connection	*not applicable*	NFC2
	Trace port output	TRACE_DATA3	*not applicable*
5	General purpose I/O	*not connected*	P0_14
	Trace port output		TRACE_DATA3
6	General purpose I/O	P0_18	P0_26
	Trace port output	TRACE_DATA0	*not applicable*
7	Ground	VSS	VSS
8	Ground	VSS	VSS
9	General purpose I/O	P0_16	P0_16
	Trace port output	TRACE_DATA1	TRACE_DATA1
10	Ground	VSS	VSS
11	General purpose I/O	*not connected*	P0_18
	Trace port output		TRACE_DATA0
12	Ground	VSS	VSS
13	General purpose I/O	P0_21	P0_21
	Configurable as pin Reset	nRESET	nRESET
14	Ground	VSS	VSS
15	General purpose I/O	*not connected*	P0_20
	Trace port clock output		TRACE_CLK
16	Ground	VSS	VSS
17	General purpose I/O	*not connected*	P0_22
18	Ground	VSS	VSS
19	General purpose I/O	P0_20	P0_24
	Trace port clock output	TRACE_CLK	*not applicable*
20	Internal Antenna	OUT_ANT	OUT_ANT
21	Ground	VSS	VSS
22	RF ourput	OUT_MOD	OUT_MOD
23	Ground	VSS	VSS
24	Ground	VSS	VSS
25	Ground	VSS	VSS
26	Power supply (1.7 – 3.6V)	VCC	VCC
27	General purpose I/O	*not connected*	P0_17
28	Serial Wire Debug I/O	SWDIO	SWDIO
29	General purpose I/O	*not connected*	P0_13
30	Serial Wire Debug clock input	SWDCLK	SWDCLK
31	Ground	VSS	VSS

The information contained in this document is the property of Insight SiP and should not be disclosed to any third party without written permission.
Specification subject to change without notice.

Pin	Type	AL variant	AX variant
32	General purpose I/O	P0_08	P0_08
33	General purpose I/O	*not connected*	P0_07
34	General purpose I/O	P0_17	P0_06
35	General purpose I/O	*not connected*	P0_04
	Analog Input		AIN2
36	General purpose I/O	P0_05	P0_05
	Analog Input	AIN3	AIN3
37	General purpose I/O	*not connected*	P0_15
	Trace port output		TRACE_DATA2
38	General purpose I/O	P0_03	P0_03
	Analog Input	AIN1	AIN1
39	General purpose I/O	*not connected*	P0_27
40	General purpose I/O	*not connected*	P0_02
	Connection for 32.768 kHz crystal		*not applicable*
	Analog Input		AIN0
41	General purpose I/O	*not connected*	P0_25
42	Digital I/O	*not connected*	P0_31
	Connection for 32.768 kHz crystal		*not applicable*
	Analog Input		AIN7
43	General purpose I/O	*not connected*	P0_11
44	General purpose I/O	P0_15	P0_30
	Analog Input	*not applicable*	AIN6
	Trace port output	TRACE_DATA2	*not applicable*
45	General purpose I/O	*not connected*	P0_19
46	General purpose I/O	P0_04	P0_29
	Analog Input	AIN2	AIN5
47	General purpose I/O pin	*not connected*	P0_23
48	General purpose I/O pin	P0_11	P0_28
	Analog Input	*not applicable*	AIN4
49 to 62	Mechanical pads	*not connected*	*not connected*

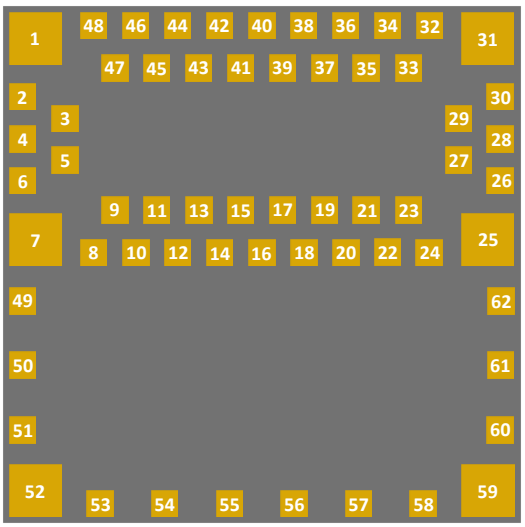

ISP1507
pad placement and pin assignment
for the LGA QFN package

TOP VIEW

The information contained in this document is the property of Insight SiP and should not be disclosed to any third party without written permission.
Specification subject to change without notice.

4. Mechanical Outlines

4.1. Mechanical Dimensions

Dimensional drawing for 8 x 8 x 1 mm, 62-Pad LGA Package

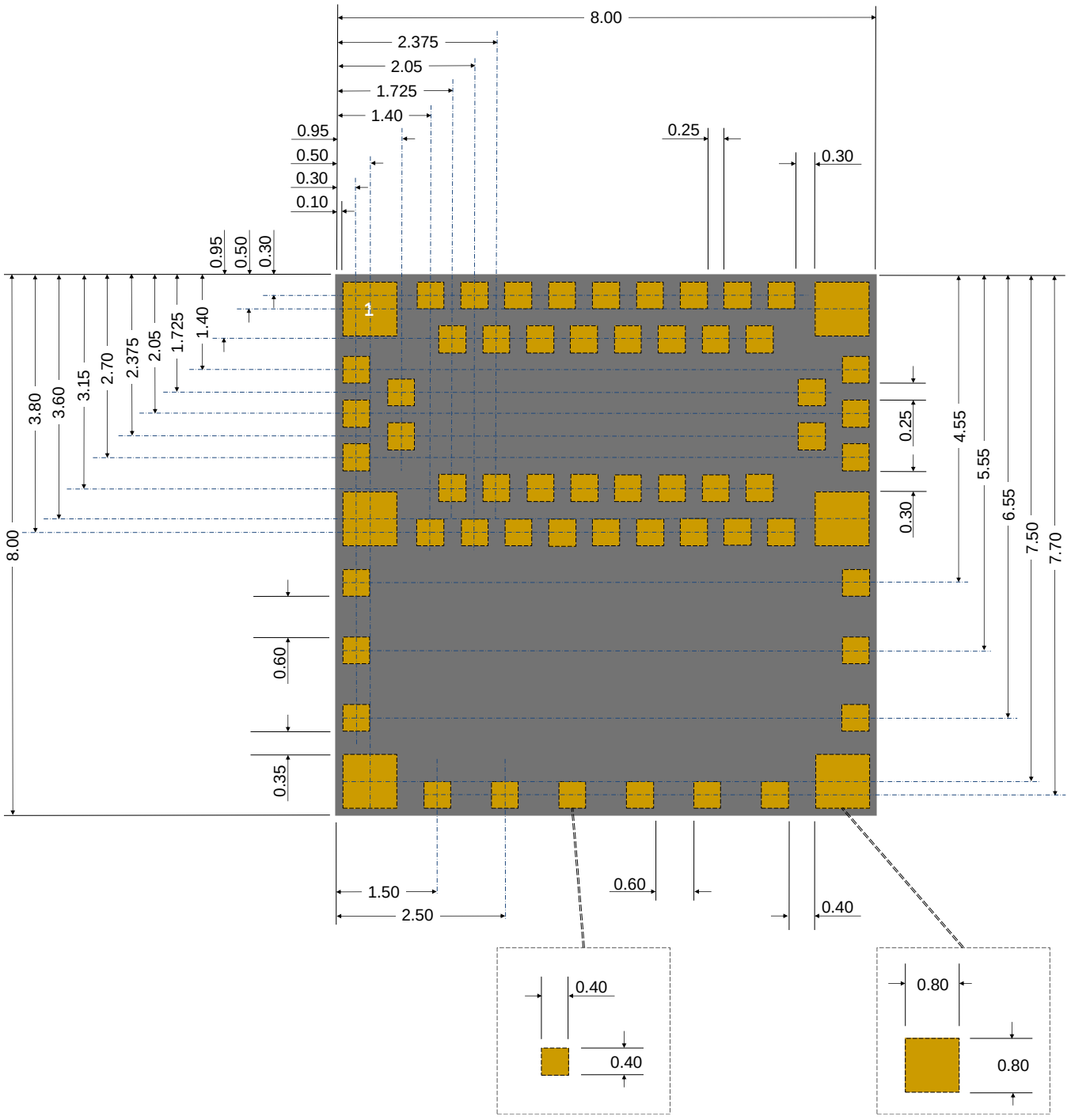

The information contained in this document is the property of Insight SiP and should not be disclosed to any third party without written permission.
Specification subject to change without notice.

4.2. SMT Assembly Guidelines

Insight SiP recommends using metal pads on the PCB of the same size as those of the components, ie 0.4 x 0.4 mm for standard pads and 0.8 x 0.8 mm for corner pads. The Solder mask openings should be 0.5 x 0.5 mm for standard pads and 0.9 x 0.9 mm for corner pads, ie 50 µm solder mask registration. Solder Paste mask should be at maximum the same as the metal pads, or somewhat reduced depending on stencil thickness and subcontractor capability (80 to 90% reduction of Solder paste on large pads may help to avoid short circuits, based on subcontractor recommendation).

Please contact Insight SiP for more detailed information.

4.3. Antenna Keep-Out Zone

For optimal antenna performance, it is recommended to respect a metal exclusion zone to the edge of the board:no metal, no traces and no components on any application PCB layer except mechanical LGA pads.

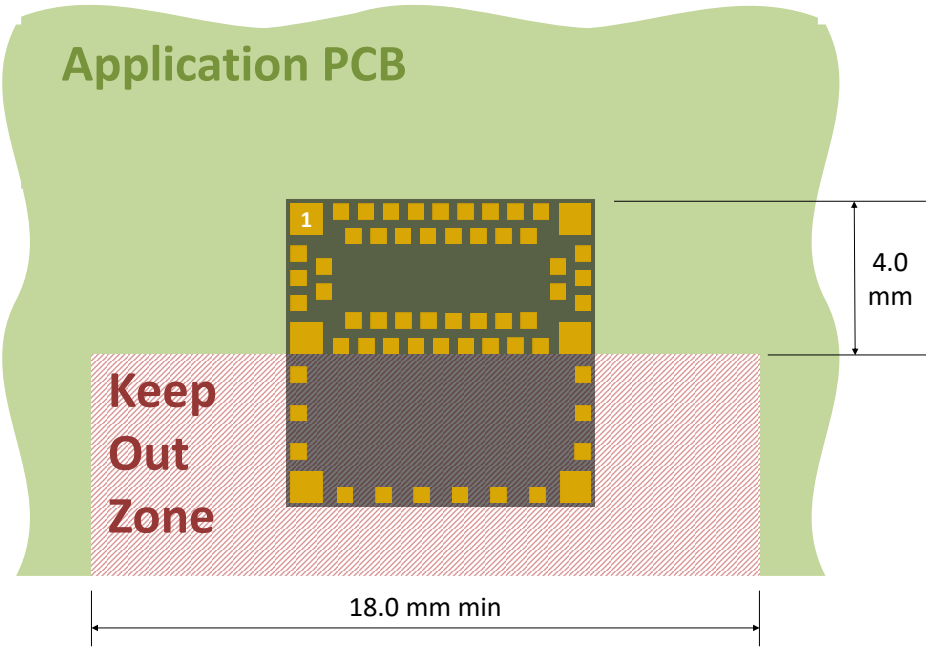

The information contained in this document is the property of Insight SiP and should not be disclosed to any third party without written permission.
Specification subject to change without notice.

5. Product Development Tools

5.1. Hardware

In order to assist clients in developing their Bluetooth Smart solutions based on the ISP1507, Insight SIP offers an Evaluation Board containing:
- One Interface Board with J-Link Seeger integrated
- One Test Board
- Cables
- NFC Antenna (for the ISP1507-AX variant)

Using this evaluation board, product developers can use a working solution as starting point to develop their own products. Time to market is saved by avoiding starting from a blank sheet of paper.

Please refer to the documentation for more information:
http://www.insightsip.com/fichiers_insightsip/pdf/ble/ISP1507/isp_ble_DS1507_DK.pdf

5.2. Firmware

ISP1507 supports Bluetooth Low Energy protocol stacks, ANT protocol stacks as well as 2.4 GHz protocol stacks, including Gazell. For more details regarding SoftDevice stacks and their compatibility with ISP1507 module variant, please refer to the Nordic info center at *www.infocenter.nordicsemi.com*. All stacks can be downloaded at *www.nordicsemi.com*.

Even though any module variant can support any stack, the S112 stack described hereunder is perfectly suited for ISP1507-AL variant while S132, S212 and S332 are more dedicated to ISP1507-AX variant.

- The S112 SoftDevice is a Bluetooth low energy peripheral protocol stack solution. It supports up to four peripheral connections with an additional broadcaster role running concurrently. The S112 SoftDevice integrates a Bluetooth low energy Controller and Host and provides a full and flexible API for building Bluetooth low energy ISP1507 solutions.

- The S132 SoftDevice is a Bluetooth low energy Central and Peripheral protocol stack solution. It supports up to twenty connections with an additional observer and a broadcaster role all running concurrently. The S132 SoftDevice integrates a Bluetooth low energy Controller and Host and provides a full and flexible API for building Bluetooth low energy ISP1507 solutions.

- The S212 SoftDevice is an ANT protocol stack solution that provides a full and flexible Application Programming Interface (API) for building ANT System on ISP1507 solutions. The S212 SoftDevice simplifies combining the ANT protocol stack and an application on the same CPU.

- The S332 SoftDevice is a combined ANT™ and Bluetooth low energy (BLE) protocol stack solution. It supports all four Bluetooth low energy roles (Central, Peripheral, Observer, Broadcaster) and ANT.

The information contained in this document is the property of Insight SiP and should not be disclosed to any third party without written permission.
Specification subject to change without notice.

The information contained in this document is the property of Insight SiP and should not be disclosed to any third party without written permission.
Specification subject to change without notice.

5.3. Development Tools

The following development tools and software are recommended for using and testing ISP1507 module:

- Nordic Semiconductor nRFgo Studio:
  Downloadable after registering at www.nordicsemi.com.

- Nordic Semiconductor Master Control Panel:
  Downloadable after registering at *www.nordicsemi.com*.
  An alternative remains to use the “nRF Connect” application for Smartphone available on the App Store (iOS device) and on the Play Store (Android device).

- Debugging and IDE:
  SEGGER Embedded Studio (SES):
  Downloadable from *https://www.segger.com/products/development-tools/embedded-studio/*

  Keil MDK-ARM Lite (limited to 32 KB code)
  Downloadable from *https://www.keil.com/demo/eval/arm.htm*.

- Segger J-Link Lite:
  Downloadable from http://www.segger.com/jlink-software.html.

- nRF52 Software Development Kit (SDK):
  nRF5-SDK can be downloaded after registering at www.nordicsemi.com. It contains example of source codes applications (C language):
  - Precompiled HEX files
  - Source code
  - SES project files
  - Keil ARM project files
  - IAR project files

The information contained in this document is the property of Insight SiP and should not be disclosed to any third party without written permission.
Specification subject to change without notice.

6. Reference Designs

6.1. Beacon Design

Beacon board is an autonomous low-power device for wireless detection and transmission. The complete device makes use of Insight SiP ISP1507 BLE module together with low power host processor and small primary button cell battery. It has been developed to explore the full range of development possibilities for beacons using Bluetooth Smart technology. They allow indoor positioning, letting your phone know that you are in range of a beacon. As the “beacon” name suggests, they transmit packets of data in regular intervals, and this data can be then picked up by devices like smartphones.

The two buttons can be programmed to enable easy switching between modes and/or functionality. As well an RGB-LED can be configured to indicate different events.

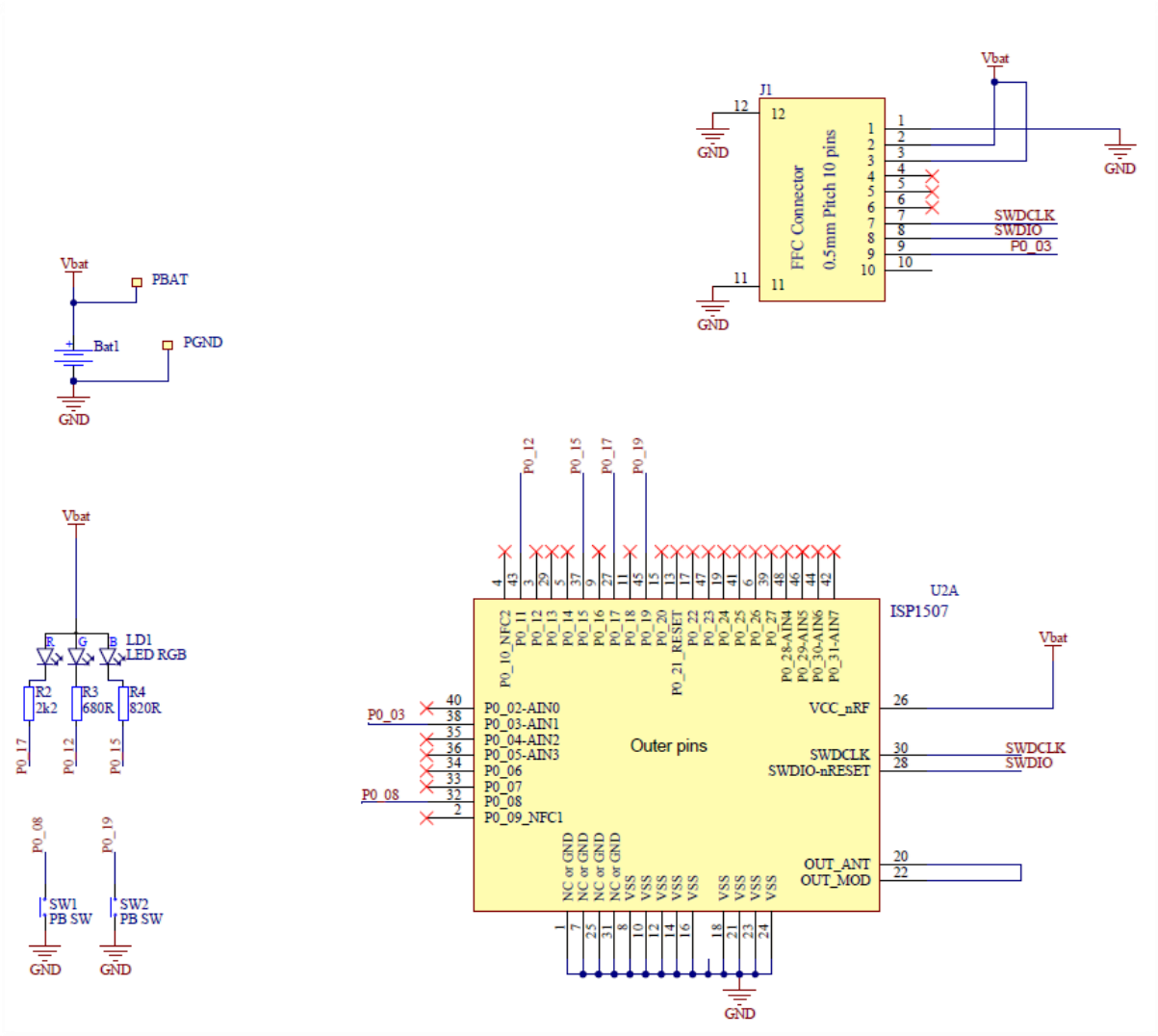

The information contained in this document is the property of Insight SiP and should not be disclosed to any third party without written permission.
Specification subject to change without notice.

6.2. Sensor Board Design

The ISP1880 is an autonomous low-power device for wireless acceleration, temperature and barometer detection. The complete device makes use of Insight SiP ISP1507 BLE module together with low power Accelerometer/Magneto, Humidity/Temperature and Barometer sensors connected to a primary button cell battery CR2032.

The ST Micro LSM9DS1 is a 3D accelerometer, 3D magnetometer and 3D gyroscope used to detect acceleration and is combined with Sensirion SHTC1 temperature/Humidity and ST Micro LPS22HB barometer sensor. A Rohm SML-P11MTT86 mini-LED is also part of the board and is available to be controlled by software. Data are transmitted via GPIO processor port (I2C, SPI).

ISP1507 Connections

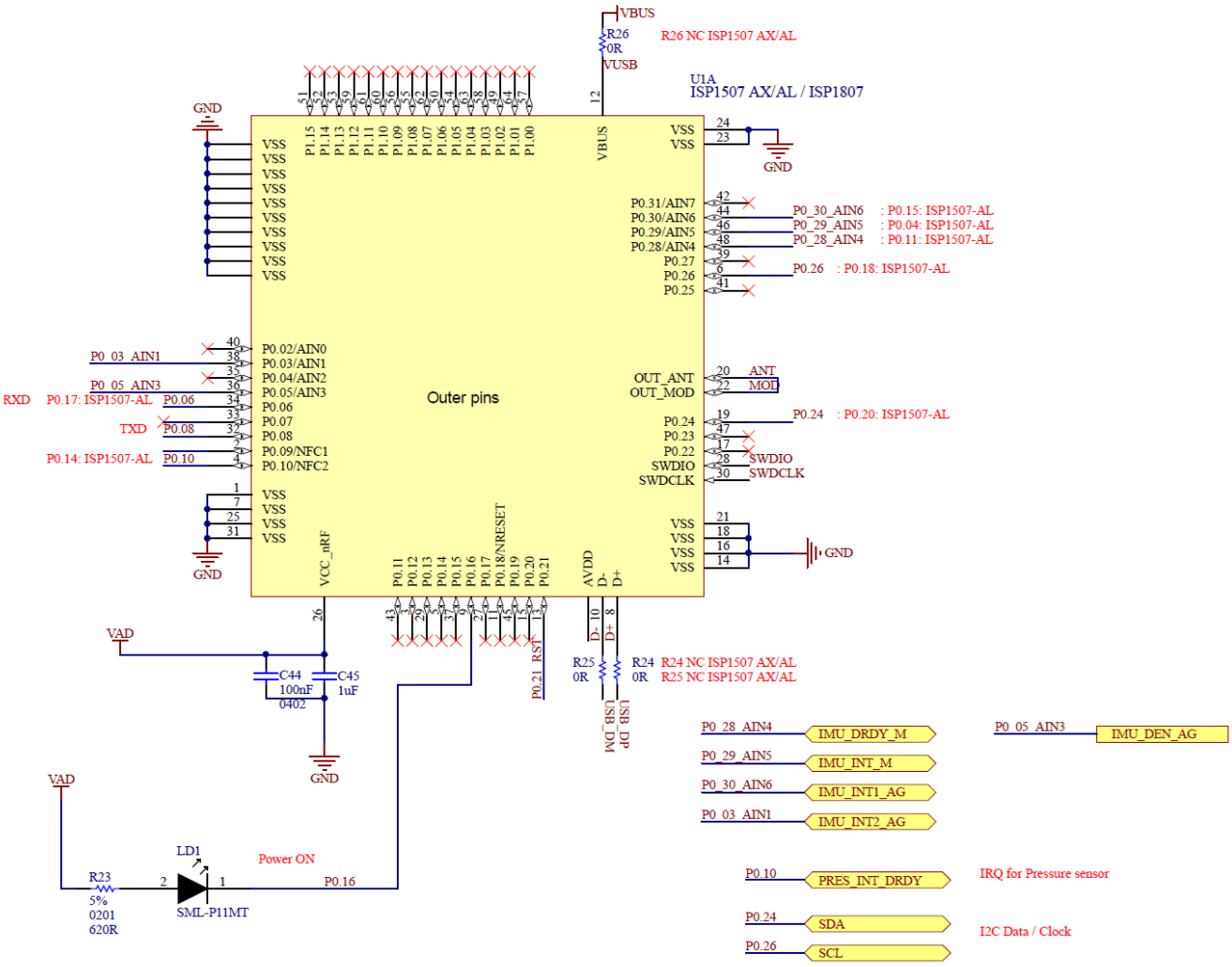

The information contained in this document is the property of Insight SiP and should not be disclosed to any third party without written permission.
Specification subject to change without notice.

Sensor connections

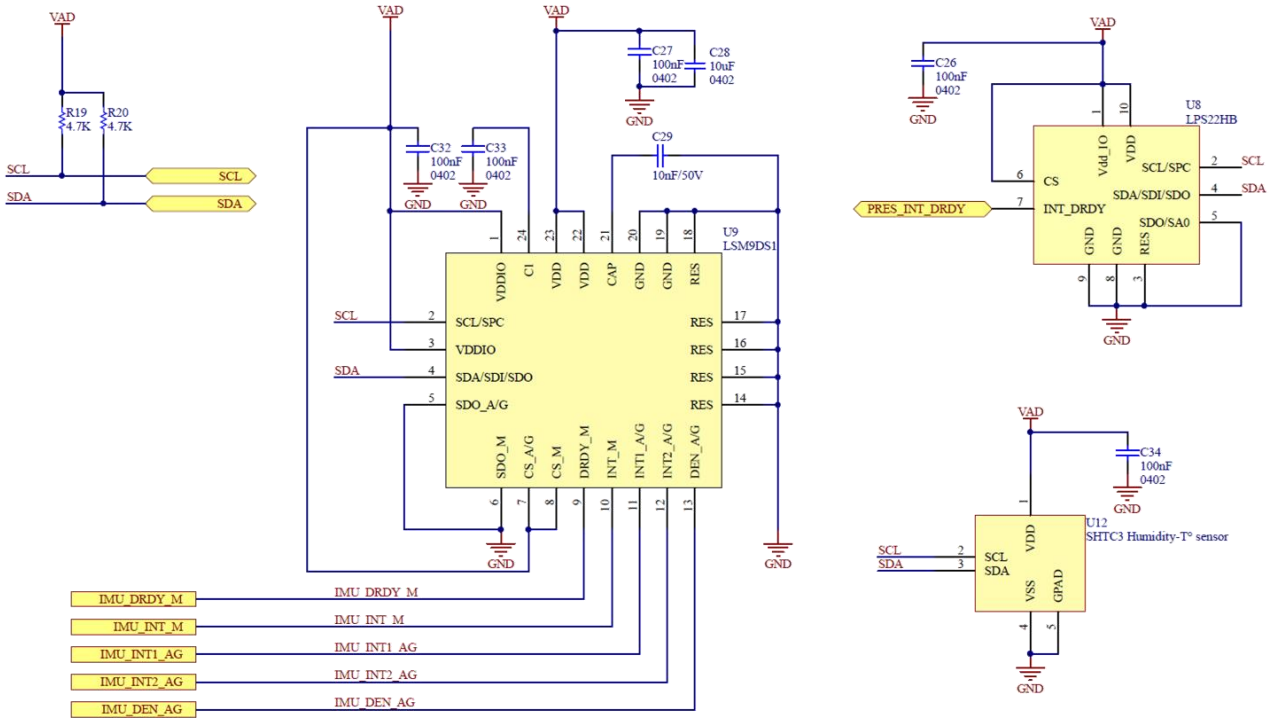

USB Connections

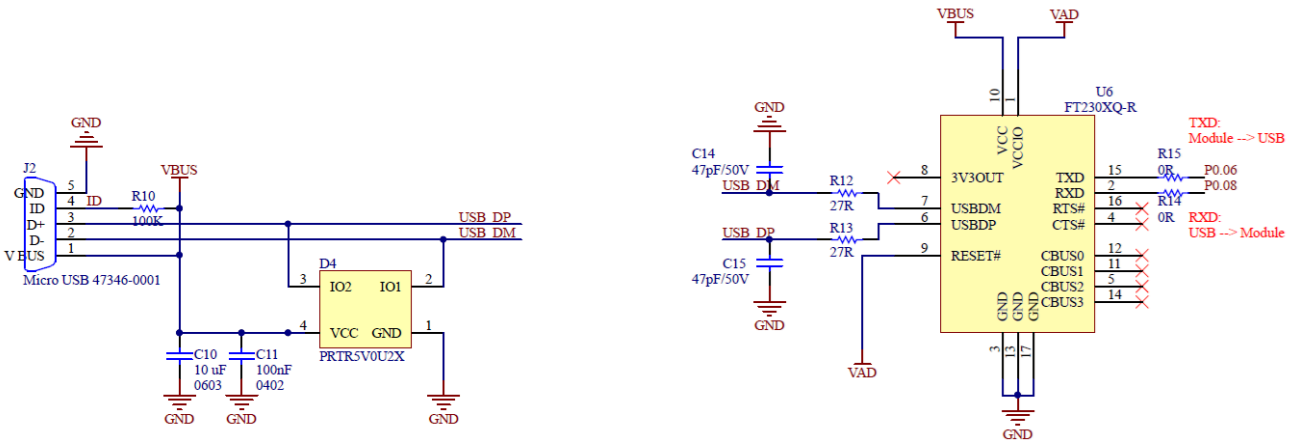

The information contained in this document is the property of Insight SiP and should not be disclosed to any third party without written permission.
Specification subject to change without notice.

Power Supply

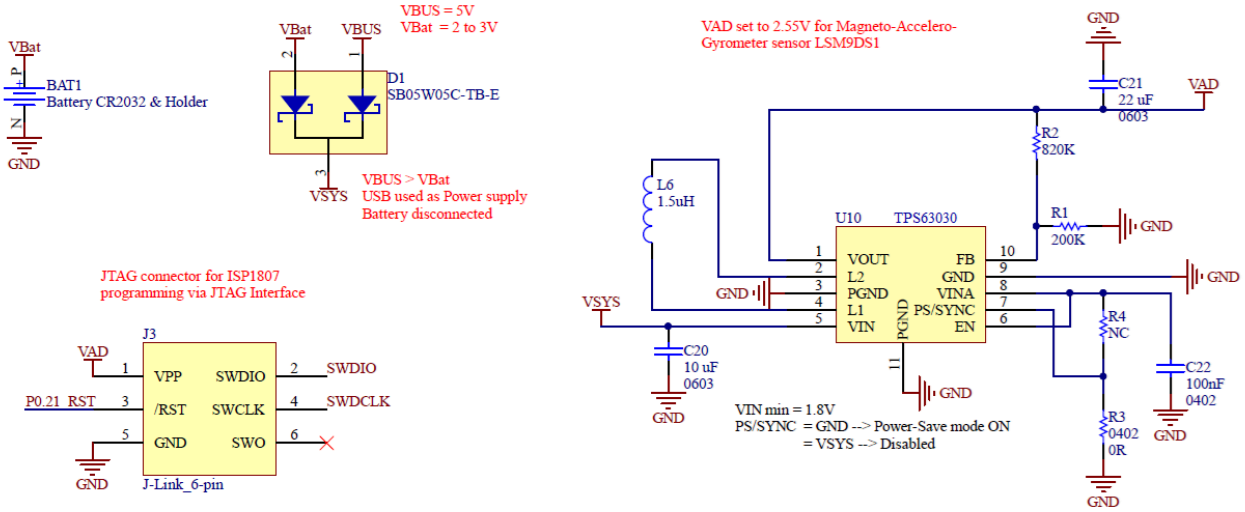

The information contained in this document is the property of Insight SiP and should not be disclosed to any third party without written permission.
Specification subject to change without notice.

7. Packaging & Ordering information

7.1. Marking

M	/N	:	I	S	P	1	5	0	7								
T	T		Y	Y	W	W	R		B	B	B	B	B	B	B	B	B

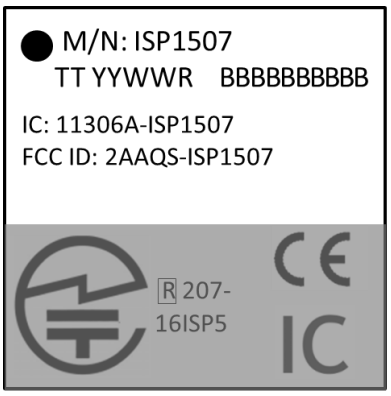

ISP1507	Part Number
TT	2 letters Module Type (see section 7.5)
YY	2 digits Year Number Date Code
WW	2 digits Week Number Date Code
R	1 letter Hardware Revision
BBBBBBBBBB	10 characters Build Code

7.2. Prototype Packaging

For engineering samples and prototype quantities up to 99 units, deliveries are provided in thermoformed trays or cut tapes.

They are delivered in sealed pack with desiccant pack and humidity sensors. Please see section 8.2 for more information on moisture sensitivity.

Please order with “ST” code packaging suffix.



7.3. Jedec Trays

For pre-production volumes, ISP1507 are available in Jedec trays. They are delivered in sealed pack with desiccant pack and humidity sensors. These Jedec trays are also suitable for further baking. Please see section 8.2 for more information on moisture sensitivity.

Please order with “JT” code packaging suffix.

Refer to tray sizes below. Complete information on Jedec trays is available on request.

The information contained in this document is the property of Insight SiP and should not be disclosed to any third party without written permission.
Specification subject to change without notice.

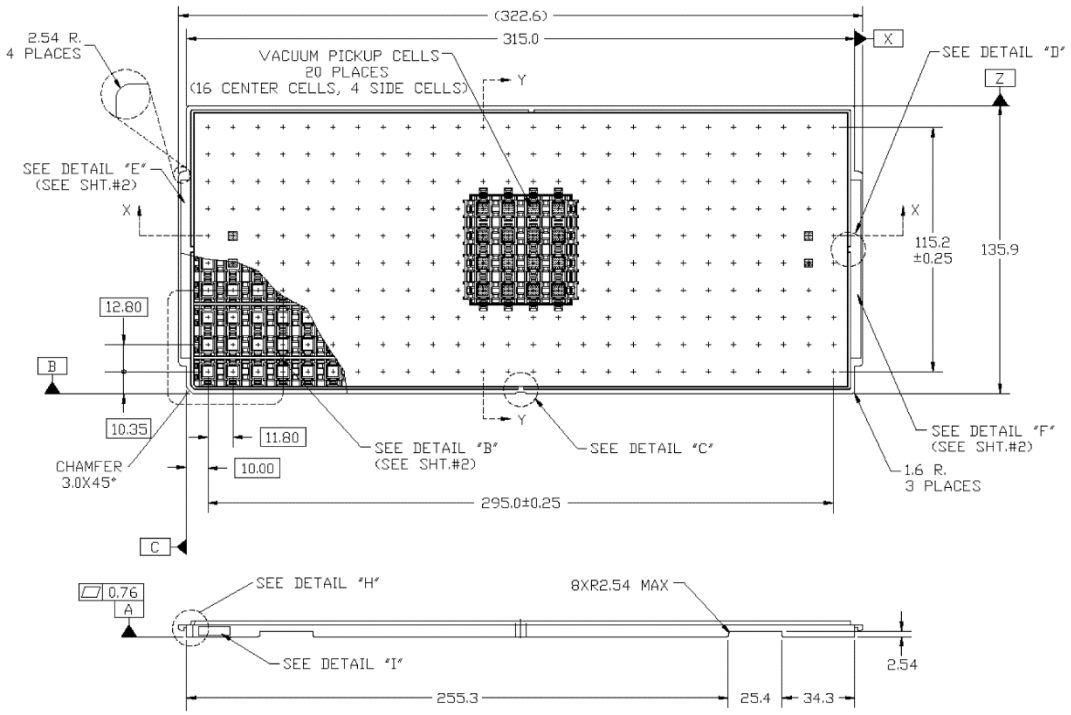

7.4. Tape and Reel

ISP1507 are also available in Tape & Reel. They are delivered in sealed pack with desiccant pack and humidity sensors. Reels are proposed in standard quantities of 500 units (180mm / 7" reel) or 2000 units (330mm / 13" reel) only. Please order with "RS" code packaging suffix for 500-unit reels and "R2" for 2000-unit reels.

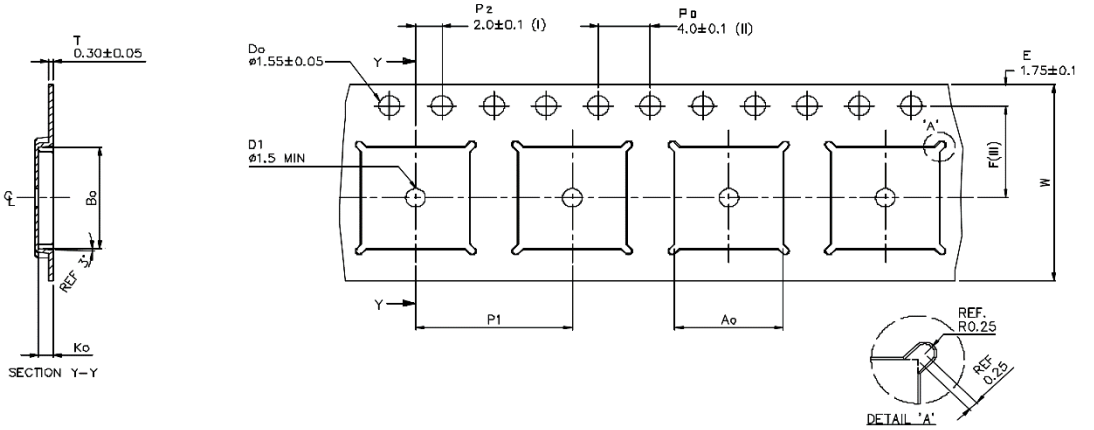

Ao	8.30 +/−0.1
Bo	8.30 +/−0.1
Ko	1.10 +/−0.1
F	7.50 +/−0.1
P1	12.00 +/−0.1
W	16.00 +/−0.3

(I) Measured from centreline of sprocket hole to centreline of pocket.
(II) Cumulative tolerance of 10 sprocket holes is ± 0.20 .
(III) Measured from centreline of sprocket hole to centreline of pocket.
(IV) Other material available.

ALL DIMENSIONS IN MILLIMETRES UNLESS OTHERWISE STATED.

The information contained in this document is the property of Insight SiP and should not be disclosed to any third party without written permission.
Specification subject to change without notice.

7.5. Ordering Information

ISP1507		Part Number
- A		ANT & BLE protocol type
	L	192 kB Flash / 24 kB RAM memory type / 13 IOs
-	X	512 kB Flash / 64 kB RAM memory type / 30 IOs
- EB		Evaluation Board (1) (2)
- TB		Test board (1) (2)
- ST		Tray or Cut Tape
- JT		Jedec Tray Packaging
- RS		Reel of 500 units

(1) Please see section 5.1 and refer to the following documentation for more information on evaluation board and test board:
https://www.insightsip.com/fichiers_insightsip/pdf/ble/ISP1507/isp_ble_DS1507_DK.pdf
https://www.insightsip.com/fichiers_insightsip/pdf/ble/ISP1507/isp_ble_AN160601.pdf
https://www.insightsip.com/fichiers_insightsip/pdf/ble/ISP1507/isp_ble_AN181103.pdf

(2) Evaluation Board and Test Board are not available for AC variant

The information contained in this document is the property of Insight SiP and should not be disclosed to any third party without written permission.
Specification subject to change without notice.

8. Storage & Soldering information

8.1. Storage and Handling

- Keep this product away from other high frequency devices which may interfere with operation such as other transmitters and devices generating high frequencies.
- Do not expose the module to the following conditions:
  - Corrosive gasses such as Cl2, H2S, NH3, SO2, or NOX
  - Extreme humidity or salty air
  - Prolonged exposure to direct Sunlight
  - Temperatures beyond those specified for storage
- Do not apply mechanical stress
- Do not drop or shock the module
- Avoid static electricity, ESD and high voltage as these may damage the module



ATTENTION

CONSERVE PRECAUTIONFOR HANDLING
ELECTROSTATIC SENSITIVE DEVICES

8.2. Moisture Sensitivity

All plastic packages absorb moisture. During typical solder reflow operations when SMDs are mounted onto a PCB, the entire PCB and device population are exposed to a rapid change in ambient temperature. Any absorbed moisture is quickly turned into superheated steam. This sudden change in vapor pressure can cause the package to swell. If the pressure exerted exceeds the flexural strength of the plastic mold compound, then it is possible to crack the package. Even if the package does not crack, interfacial delamination can occur.

Since the device package is sensitive to moisture absorption, it is recommended to bake the product before assembly. The baking process for dry packing is 24 hours at 125°C.

ISP1507 has been tested MSL-3 according to standards. After baking, modules can be exposed to ambient room conditions (approximately 30 °C/60%RH) during 168 hours before assembly on the PCB.



CAUTION

MOISTURE
SENSITIVE DEVICES



The information contained in this document is the property of Insight SiP and should not be disclosed to any third party without written permission.
Specification subject to change without notice.

8.3. Soldering information

Recommendation for RoHS reflow process is according to Jedec J–STD-020 and 033 standard profiles.

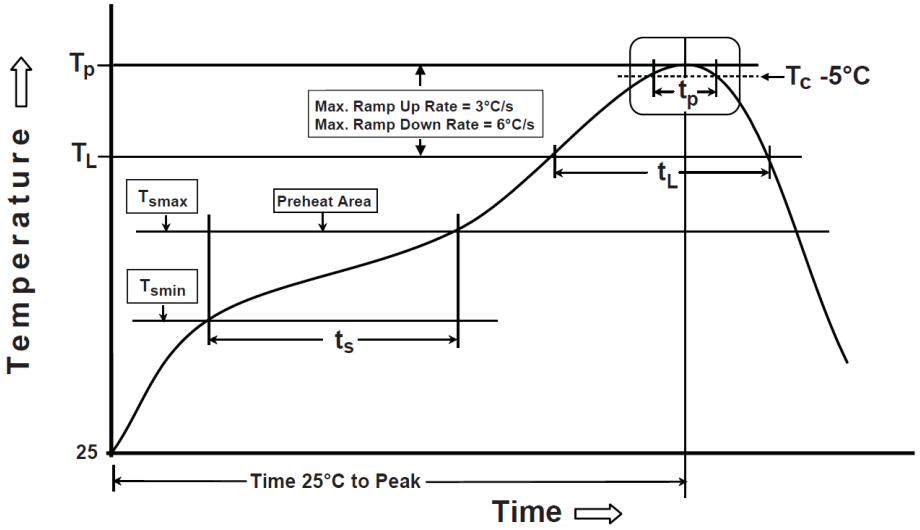

Preheat/Soak Temperature Min (T_{smin}) Temperature Max (T_{smax}) Time (t_s) from (T_{smin} to T_{smax})	 150 °C 200 °C 60-120 sec
Ramp-up rate (T_L to T_p)	3 °C/sec max
Liquidous temperature (T_L) Time (t_L) maintained above T_L	217 °C 60-150 sec

Peak package body temperature (T_p)	260°C (+0/-5°C)
Classification Temperature (T_c) Time (t_p) maintained above T_C-5 °C	260 °C 30 sec
Ramp-down rate (T_p to T_L)	6 °C/sec max
Time 25 °C to peak temperature	8 mn max

The information contained in this document is the property of Insight SiP and should not be disclosed to any third party without written permission.
Specification subject to change without notice.

9. Quality & User information

9.1. Certifications

- Argentina: Certification RAMATEL N° H-26631
- Brazil: Certification ANATEL N°09013-21-14043
- Canada: Certification IC N°11306A-ISP1507
- CE: Declaration of Conformity N° TR161102- Complies with RED 2014/53/EU, EN300328 V2.2.2
- China: CMITID Certification N°2021DJ15143
- India: WPC Certification N° ETA-SD-20220201281
- Israel: Certification IMOC N°51-58471
- Japan: TELEC Certification N°207-16ISP5
- South Korea: KCC Certification N° R-C-ESF-ISP1507
- USA: FCC Identifier N° 2AAQS-ISP1507

- Bluetooth SIG certified N° D033110

- RoHS3 compliant
- Reach compliant
- Minerals responsible initiative

9.2. USA – User information

This intends to inform how to specify the FCC ID of our module “ISP1507” on the product. Based on the Public Notice from FCC, the host device should have a label which indicates that it contains our module. The label should use wording such as:

“Contains FCC ID: 2AAQS-ISP1507”

Any similar wording that expresses the same meaning may be used.

The label of the host device should also include the below FCC Statement. When it is not possible, this information should be included in the User Manual of the host device:

“This device complies with part 15 of the FCC rules. Operation is subject to the following two conditions. *(1) This device may not cause harmful interference* *(2) This device must accept any interference received, including interference that may cause undesired operation.* *Caution: Any Changes or modifications not expressly approved by the party responsible for compliance could void the user’s authority to operate the equipment.”*

The information contained in this document is the property of Insight SiP and should not be disclosed to any third party without written permission.
Specification subject to change without notice.

9.3. Canada – User information

This intends to inform how to specify the IC ID of our module “ISP1507” on the product. According to Canadian standards “RSS-210” and “RSS-Gen”, the host device should have a label which indicates that it contains our module. The label should use wording such as:

“Contains IC: 11306A-ISP1507”

Any similar wording that expresses the same meaning may be used.

The label of the host device should also include the below IC Statement. When it is not possible, this information should be included in the User Manual of the host device:

“This device complies with Industry Canada licence-exempt RSS standard(s). Operation is subject to the following two conditions: (1) this device may not cause interference, and (2) this device must accept any interference, including interference that may cause undesired operation of the device. *Le présent appareil est conforme aux CNR d'Industrie Canada applicables aux appareils radio exempts de licence. L'exploitation est autorisée aux deux conditions suivantes : (1) l'appareil ne doit pas produire de brouillage, et (2) l'utilisateur de l'appareil doit accepter tout brouillage radioélectrique subi, même si le brouillage est susceptible d'en compromettre le fonctionnement.”*

9.4. RF Exposure Information

This equipment complies with FCC/IC radiation exposure limits set forth for an uncontrolled environment and meets the FCC radio frequency (RF) Exposure Guidelines in Supplement C to OET65 and RSS-102 of the IC radio frequency (RF) Exposure rules. This equipment has very low levels of RF energy that it deemed to comply without maximum permissive exposure evaluation (MPE).

9.5. Informations concernant l'exposition aux fréquences radio (RF)

La puissance de sortie émise par l’appareil de sans-fil est inférieure à la limite d'exposition aux fréquences radio d’Industry Canada (IC).Ce module a également été évalué et démontré conforme aux limites d'exposition aux RF d'IC dans des conditions d'exposition à des appareils mobiles et/ou portables.

9.6. Discontinuity

Normally a product will continue to be manufactured as long as all of the following are true:
- The manufacturing method is still available.
- There are no replacement products.
- There is demand for it in the market.

The information contained in this document is the property of Insight SiP and should not be disclosed to any third party without written permission.
Specification subject to change without notice.

In case of obsolescence, Insight SiP will follow Jedec Standard JSD-48. A Product Discontinuation Notice (PDN) will be sent to all distributors and made available on our website. After this, the procedure goes as follows:
- Last Order Date will be 6 months after the PDN was published.
- Last Shipment Date will be 6 months after Last Order Date, i.e. 12 months after PDN.

9.7. Disclaimer

Insight SiP's products are designed and manufactured for general consumer applications, so testing and use of the product shall be conducted at customer's own risk and responsibility. Please conduct validation and verification and sufficient reliability evaluation of the products in actual condition of mounting and operating environment before commercial shipment of the equipment. Please also pay attention (i) to apply soldering method that don't deteriorate reliability, (ii) to minimize any mechanical vibration, shock, exposure to any static electricity, (iii) not to overstress the product during and after the soldering process.

The products are not designed for use in any application which requires especially high reliability where malfunction of these products can reasonably be expected to result in personal injury or damage to the third party's life, body or property, including and not limited to (i) aircraft equipment, (ii) aerospace equipment, (iii) undersea equipment, (iv) power plant control equipment, (v) medical equipment, (vi) transportation equipment, (vii) traffic signal equipment, (viii) disaster prevention / crime prevention equipment.

The only warranty that Insight SiP provides regarding the products is its conformance to specifications provided in datasheets. Insight SiP hereby disclaims all other warranties regarding the products, express or implied, including without limitation any warranty of fitness for a particular purpose, that they are defect-free, or against infringement of intellectual property rights. Insight SiP customers agree to indemnify and defend Insight SiP against all claims, damages, costs and expenses that may be incurred, including without any limitation, attorney fees and costs, due to the use of products.

The information contained in this document is the property of Insight SiP and should not be disclosed to any third party without written permission.
Specification subject to change without notice.