OIS & Open-AF Control LSI

LC898128DP



WLCSP30
CASE 567WE

MARKING DIAGRAM

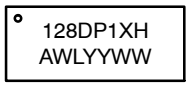

A = Assembly Location
WL = Wafer Lot
YY = Year
WW = Work Week

ORDERING INFORMATION

Device	Package	Shipping†
LC898128DP1XHTBG	WLCSP30 (Pb−Free)	4,000 / Tape & Reel

†For information on tape and reel specifications, including part orientation and tape sizes, please refer to our Tape and Reel Packaging Specification Brochure, BRD8011/D.

Overview

This is a system LSI integrating an on−chip 32bit DSP, a FLASH ROM and peripherals including analog circuits for OIS (Optical Image Stabilization) / Open−AF (Auto Focus) control, constant current drivers.

Features

- On−chip 32bit DSP
  - Built−in Software for Digital Servo Filter
  - Built−in Software for Gyro Filter
- Memory
  - 40 kB Flash Memory
  - Program ROM
  - Program SRAM
  - Data SRAM
- Peripherals
  - AD Converter
  - DA Converter
  - 2−wire Serial I/F Circuit
    (The Communication Protocol is Compatible with I^2C)
  - Hall Bias Circuit
  - Hal Amp
  - OSC (Oscillator)
  - LDO (Low Drop−Out Regulator)
  - Temperature Sensor
  - Digital Gyro I/F (SPI)
  - Interrupt I/F
- Driver
  - OIS:
    Constant Current Linear Driver (x2ch, I_{full} = 200 mA)
  - OP−AF (Bi−direction):
    Constant Current Linear Driver (x1ch, I_{full} = 130 mA)
- Package
  - WLCSP30 (4.300 mm x 1.175 mm) Thickness Max. 0.35 mm, with Back Coat
  - Ball 3 x 10
  - Pitch 0.4 mm
  - Lead−Free
  - Halogen Free
- Power Supply Voltage
  - AD/DA/VGA/LDO/OSC/Flash/:
    AVDD30 = 2.7 V to 3.3 V
  - Driver: VM1,2 = 1.8 V to 3.3 V
  - 1.8 V I/O: IOVDD = 1.7 V to 3.3 V
  - Core Logic: Generated by On−chip LDO
    Connect 1 μF Capacitor to LDPO Pin

© Semiconductor Components Industries, LLC, 2021

BLOCK DIAGRAM

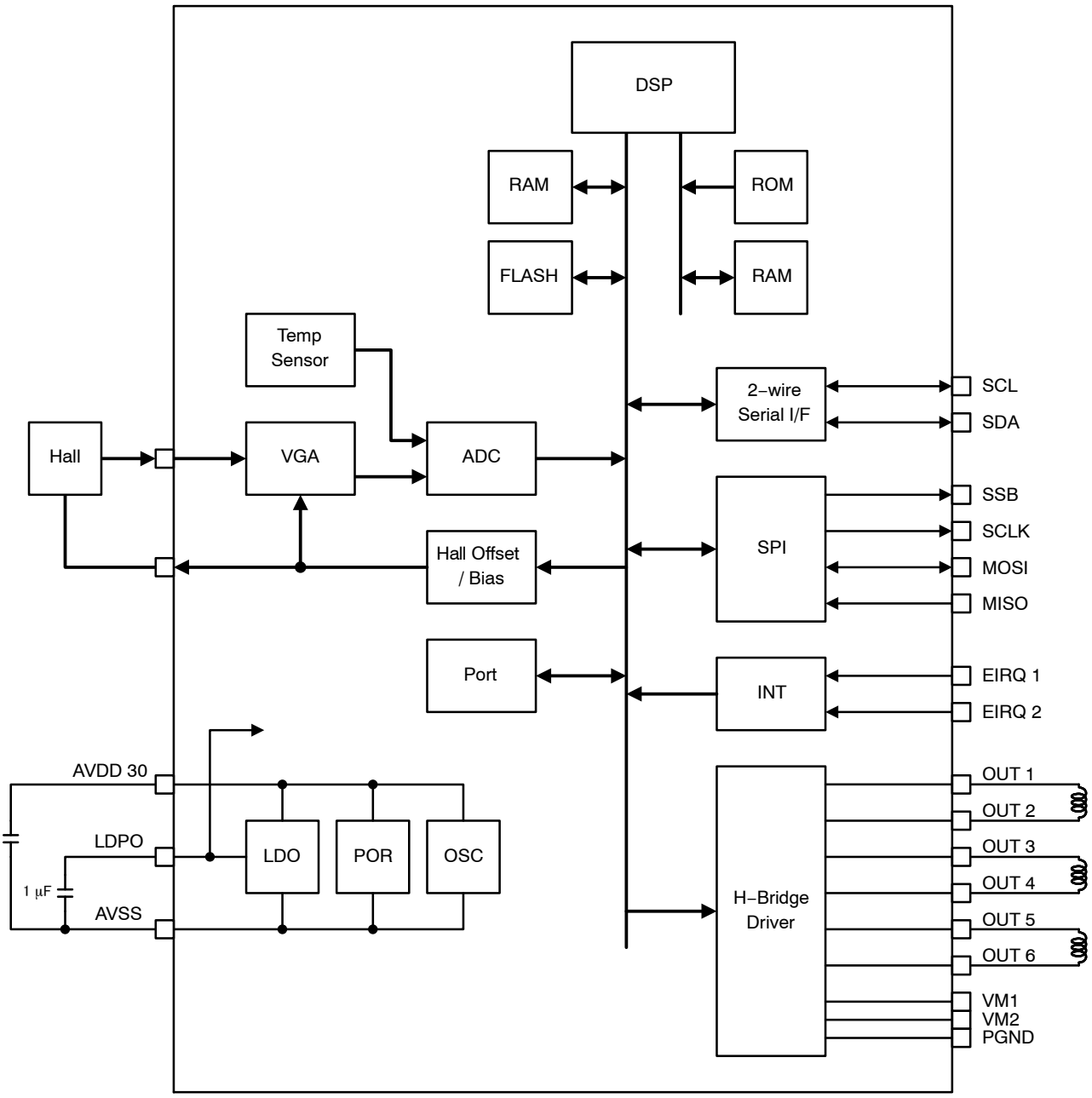

Figure 1. Block Diagram

PIN LAYOUT

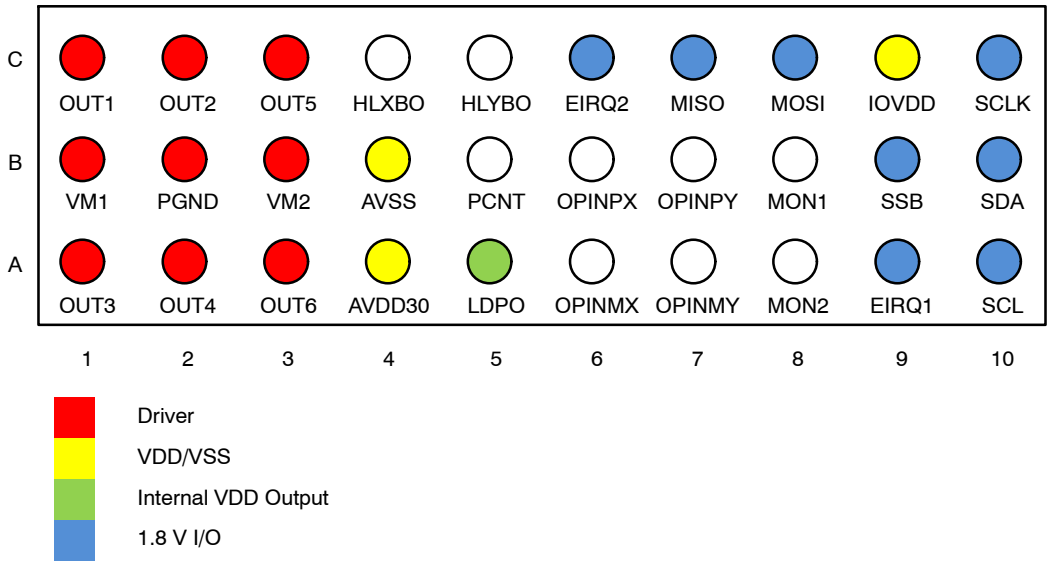

Figure 2. Pin Layout (Bottom View)

PIN DESCRIPTION

PIN DESCRIPTION

No.	Pin	I/O	I/O Pwr	Primary Function	Sub Functions	Init
1	MON1	B	AVDD30	Servo Monitor Analog In/Out	2−wire serial Monitor Data	Z
2	MON2	B	AVDD30	Servo Monitor Analog In/Out	2−wire serial Monitor Clock	Z
3	SCL	B	IOVDD	2−wire serial HOST I/F Clock Slave		Z
4	SDA	B	IOVDD	2−wire serial HOST I/F Data Slave		Z
5	IOVDD	P		I/O Power (1.7 V to 3.3 V)		−
6	SSB	B	IOVDD	Digital Gyro Data I/F Chip Select Out (3/4−wire Master)	Digital Gyro Data I/F Chip Select In (3/4−wire Slave)	Z
7	SCLK	B	IOVDD	Digital Gyro Data I/F Clock Out (3/4−wire Master)	Digital Gyro Data I/F Clock In (3/4−wire Slave) 2−wire serial Sensor Hub I/F Clock Slave	Z
8	MOSI	B	IOVDD	Digital Gyro Data I/F Data InOut (3−wire Master) Digital Gyro Data I/F Data Out (4−wire Master)	Digital Gyro Data I/F Data InOut (3wire Slave) Digital Gyro Data I/F Data In (4−wire Slave) 2−wire serial Sensor Hub I/F Data Slave	Z
9	MISO	B	IOVDD	Digital Gyro Data I/F Data In (4−wire Master) Digital Gyro Data I/F Chip Select 2 Out (3−wire Master)	Digital Gyro Data I/F Data Out (4−wire Slave)	U
10	EIRQ1	B	IOVDD	Interrupt Input 1		Z
11	EIRQ2	B	IOVDD	Interrupt Input 2		Z

PIN DESCRIPTION (continued)

No.	Pin	I/O	I/O Pwr	Primary Function	Sub Functions	Init
12	PCNT	O	AVDD30	No use		Z
13	HLXBO	O	AVDD30	OIS Hall X Bias Output		Z
14	HLYBO	O	AVDD30	OIS Hall Y Bias Output		Z
15	OPINMX	I	AVDD30	OIS Hall X Opamp Input Minus		–
16	OPINPX	I	AVDD30	OIS Hall X Opamp Input Plus		–
17	OPINMY	I	AVDD30	OIS Hall Y Opamp Input Minus		–
18	OPINPY	I	AVDD30	OIS Hall Y Opamp Input Plus		–
19	OUT1	O	VM1	OIS Driver Output		Z
20	OUT2	O	VM1	OIS Driver Output		Z
21	OUT3	O	VM1	OIS Driver Output		Z
22	OUT4	O	VM1	OIS Driver Output		Z
23	OUT5	O	VM2	OP−AF Driver Output		Z
24	OUT6	O	VM2	OP−AF Driver Output		Z
25	AVDD30	P		Analog Power (2.7 V to 3.3 V)		–
26	AVSS	P		Analog GND		–
27	VM1	P		OIS Driver Power (1.8 V to 3.3 V)		–
28	VM2	P		OP−AF Driver Power (1.8 V to 3.3 V)		–
29	PGND	P		Driver GND		–
30	LDPO	P		Internal 1.38 V LDO Power Output		–

*Process when pins are not used

- PIN TYPE “O” – Ensure that it is set to OPEN.
- PIN TYPE “I” – OPEN is inhibited. Ensure that it is connected to the V_{DD} or V_{SS} even when it is unused. (Please contact **onsemi** for more information about selection of V_{DD} or V_{SS}.)
- PIN TYPE “B” – If you are unsure about processing method on the pin description of pin layout table, please contact us.

Note that incorrect processing of unused pins may result in defects.

ELECTRICAL CHARACTERISTICS

ABSOLUTE MAXIMUM RATINGS (AVSS = 0 V, PGND = 0 V)

Parameter	Symbol	Conditions	Ratings	Unit
Power Supply Voltage	$V_{AD}30$ max	$T_A \le 25°C$	−0.3 to 4.6	V
	V_M max	$T_A \le 25°C$	−0.3 to 4.6	V
	V_{IO} max	$T_A \le 25°C$	−0.3 to 4.6	V
Input/Output Voltage	$V_{AI}30$, $V_{AO}30$	$T_A \le 25°C$	−0.3 to $V_{AD}30$ + 0.3	V
	$V_{MI}30$, $V_{MO}30$	$T_A \le 25°C$	−0.3 to V_M30 + 0.3	V
	V_{II}, V_{IOO}	$T_A \le 25°C$	−0.3 to $V_{IO}18$ + 0.3	V
Storage Temperature	T_{stg}		−55 to 125	°C

Stresses exceeding those listed in the Maximum Ratings table may damage the device. If any of these limits are exceeded, device functionality should not be assumed, damage may occur and reliability may be affected.

ALLOWABLE OPERATING RATINGS (T_A = −30 to 85°C, AVSS = 0 V, PGND = 0 V)

Parameter	Symbol	Min	Typ	Max	Unit
3.0 V POWER SUPPLY (AVDD30)					
Power Supply Voltage	$V_{AD}30$	2.7	2.8	3.3	V
Input Voltage Range	V_{INA}	0	–	$V_{AD}30$	V
3.0 V POWER SUPPLY (VM1, VM2)					
Power Supply Voltage	V_M30	1.8 (Note 1)	2.8	the lower of 3.3 and AVDD30 + 0.5	V
Input Voltage Range	V_{INM}	0	–	V_M30	V
1.8 V POWER SUPPLY (IOVDD)					
Power Supply Voltage	V_{IO}	1.7	1.8	3.3	V
Input Voltage Range	V_{INI}	0	–	V_{IO}	V

Functional operation above the stresses listed in the Recommended Operating Ranges is not implied. Extended exposure to stresses beyond the Recommended Operating Ranges limits may affect device reliability.

1. Constant current.

DC CHARACTERISTICS: INPUT/OUTPUT

(T_A = −30 to 85°C, AVSS = 0 V, PGND = 0 V, AVDD30 = 2.7 to 3.3 V, IOVDD = 1.7 to 3.3 V)

Parameter	Symbol	Conditions	Min	Typ	Max	Unit	Applicable Pins
High−level Input Voltage	V_{IH}	CMOS Schmitt	0.7 IOVDD			V	SCL, SDA, SSB, SCLK, MOSI, MISO, EIRQ1, EIRQ2
Low−level Input Voltage	V_{IL}				0.3 IOVDD	V	
High−level Input Voltage	V_{IH}	CMOS Schmitt	0.7 AVDD30			V	MON1, MON2
Low−level Input Voltage	V_{IL}				0.3 AVDD30	V	MON1, MON2
High−level Output Voltage	V_{OH}	I_{OH} = −3 mA	IOVDD − 0.2			V	SDA, SSB, SCLK, MOSI, MISO, EIRQ1, EIRQ2
Low−level Output Voltage	V_{OL}	I_{OL} = 3 mA			0.2	V	SCL, SDA, SSB, SCLK, MOSI, MISO, EIRQ1, EIRQ2
High−level Output Voltage	V_{OH}	I_{OH} = −2 mA	AVDD30 − 0.2			V	MON1, MON2
Low−level Output Voltage	V_{OL}	I_{OL} = 2 mA			0.2	V	MON1, MON2

DC CHARACTERISTICS: INPUT/OUTPUT (continued)
(T_A = −30 to 85°C, AVSS = 0 V, PGND = 0 V, AVDD30 = 2.7 to 3.3 V, IOVDD = 1.7 to 3.3 V)

Parameter	Symbol	Conditions	Min	Typ	Max	Unit	Applicable Pins
Analog Input Voltage	V_{AI}		AVSS		AVDD30	V	MON1, MON2, OPINPX, OPINMX, OPINPY, OPINMY
Pull Up Resistor	R_{up}		20		250	kΩ	SSB, SCLK, MOSI, MISO, EIRQ1, EIRQ2, MON1, MON2
Pull Down Resistor	R_{dn}		20		250	kΩ	

DRIVER OUTPUT
(T_A = 25°C, V_{SS} = 0 V, PGND = 0 V, AVDD30 = VM1,2 = 2.8 V)

Parameter	Symbol	Conditions	Min	Typ	Max	Unit
Output Current, OUT1−OUT4	I_{full}	Full code	190	200	210	mA
Output Current, OUT5, OUT6		Full code OP−AF (bi−direction)	123.5	130	136.5	mA

NON−VOLATILE MEMORY CHARACTERISTICS

Parameter	Symbol	Conditions	Value	Unit
Operating Temperature	T_{opr1}	Read for FLASH	−30 to 85	°C
	T_{opr2}	Program & Erase for FLASH	−10 to 65 (Note 2)	°C

2. All drivers must be in the standby state.

Item	Symbol	Conditions	Min	Typ	Max	Unit	Applicable Circuit
Endurance	EN		−	−	1000	Cycles	Flash Memory
Data Retention	RT		10	−	−	Years	
Write Time	t_{WT}		−	−	3	ms	

Product parametric performance is indicated in the Electrical Characteristics for the listed test conditions, unless otherwise noted. Product performance may not be indicated by the Electrical Characteristics if operated under different conditions.

AC CHARACTERISTICS

Power Supply Timing

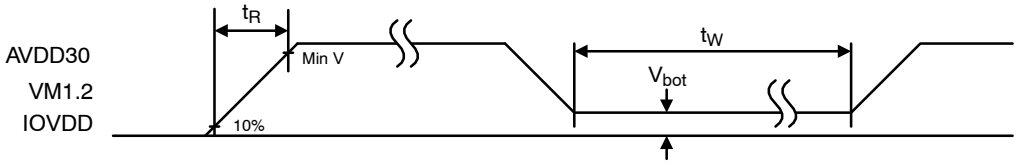

Figure 3. V_{DD} Supply Timing

Table 1.

Item	Symbol	Min	Typ	Max	Unit
Rise Time	t_R	–	–	3	ms
Wait Time	t_W	100	–	–	ms
Bottom Voltage	V_{bot}	–	–	0.2	V

Injection order between AVDD30, VM1,2 and IOVDD is below.

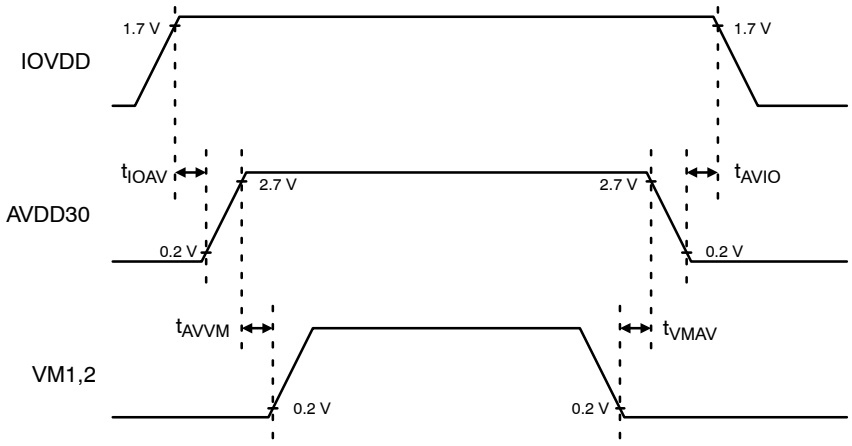

Figure 4. Injection Order between AVDD30, VM1,2 and IOVDD

Table 2.

Item	Symbol	Min	Typ	Max	Unit
IOVDD On to AVDD30 ON	t_{IOAV}	0	–	–	ms
AVDD30 ON to VM1,2 ON	t_{AVVM}	0	–	–	ms
VM1,2 OFF to AVDD30 OFF	t_{VMAV}	0	–	–	ms
AVDD30 OFF to IOVDD OFF	t_{AVIO}	0	–	*	ms

*Please make IOPRSTB (D0_0064h, bit0) = 0 before turning OFF AVDD when AVDD is turned off with keeping IOVDD on.

NOTES:

- VM1, VM2 ≤ AVDD30 + 0.5 V
- Power ON/OFF of VM1 and VM2, is possible individually.

SDA, SCL, SSB, SCLK, MOSI, MISO, EIRQ1 and EIRQ2 tolerate 3 V input at the time of power off.

The data in the Flash memory may be rewritten unintentionally if you do not keep specifications.

And it is forbidden to power off during Flash memory access. The data in the Flash memory may be rewritten unintentionally.

OIS driver is recommended to set standby before VM1 power off.
AF driver is recommended to set standby before VM2 power off.

2−wire Serial Interface Timing

The 2−wire serial interface timing definition and electric characteristics are shown below. The communication protocol is compatible with I^2C. This circuit has clock stretch function.

Static Address: 7'b0100100

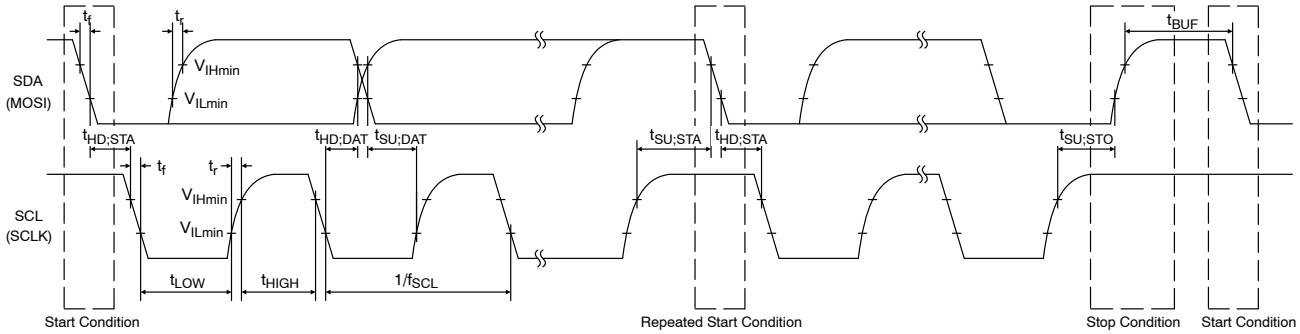

Figure 5. 2−wire Serial Interface Timing

Table 3.

Item	Symbol	Standard−mode		Fast−mode		Fast−mode Plus		Units
		Min	Max	Min	Max	Min	Max	
SCL Clock Frequency	f_{SCL}	−	100	−	400	−	1000	kHz
START Condition Hold Time	$t_{HD;STA}$	4.0	−	0.6	−	0.26	−	μs
SCL Clock Low Period	t_{LOW}	4.7	−	1.3	−	0.5	−	μs
SCL Clock High Period	t_{HIGH}	4.0	−	0.6	−	0.26	−	μs
Setup Time for Repetition START Condition	$t_{SU;STA}$	4.7	−	0.6	−	0.26	−	μs
Data Hold Time	$t_{HD;DAT}$	0 (Note 3)	3.45	0 (Note 3)	0.9	0 (Note 3)	0.45	μs
Data Setup Time	$t_{SU;DAT}$	250	−	100	−	50	−	ns
SDA, SCL Rising Time	t_r	−	1000	−	300	−	120	ns
SDA, SCL Falling Time	t_f	−	300	−	300	−	120	ns
STOP Condition Setup Time	$t_{SU;STO}$	4.0	−	0.6	−	0.26	−	μs
Bus Free Time between STOP and START	t_{BUF}	4.7	−	1.3	−	0.5	−	μs

3. Although the I^2C specification defines a condition that 300 ns of hold time is required internally, this LSI is designed for a condition with typ. 40 ns of hold time. If SDA (MOSI) signal is unstable around falling point of SCL (SCLK) signal, please implement an appropriate treatment on board, such as inserting a resister.

MECHANICAL CASE OUTLINE
PACKAGE DIMENSIONS

ON Semiconductor®

WLCSP30 1.175x4.3X0.33
CASE 567WE
ISSUE O

DATE 28 MAR 2018

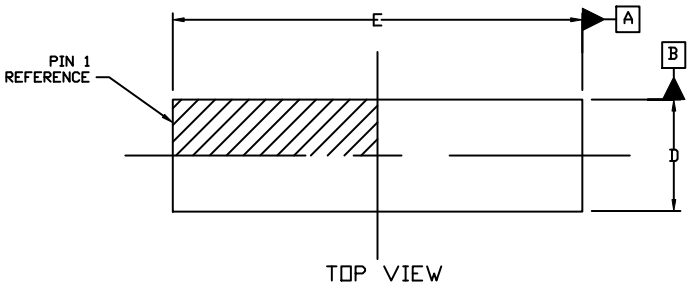

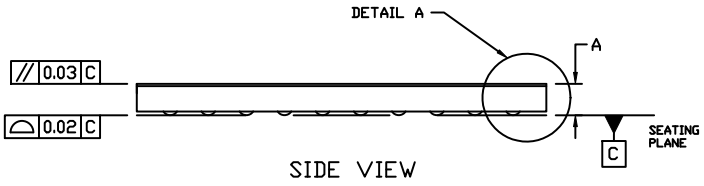

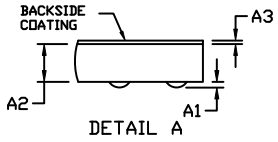

NOTES:

1. DIMENSIONING AND TOLERANCING PER ASME Y14.5M, 1994.
2. CONTROLLING DIMENSION: MILLIMETERS
3. DATUM C, THE SEATING PLANE, IS DEFINED BY THE SPERICAL CROWNS OF THE CONTACT BALLS.
4. COPLANARITY APPLIES TO THE SPHERICAL CROWNS OF THE CONTACT BALLS.
5. DIMENSION b IS MEASURED AT THE MAXIMUM CONTACT BALL DIAMETER PARALLEL TO DATUM C.

DIM	MILLIMETERS		
	MIN.	NOM.	MAX.
A	0.31	0.33	0.35
A1	0.034	0.040	0.046
A2	0.253	0.265	0.278
A3	0.025 REF		
b	0.15	0.17	0.19
D	1.15	1.175	1.20
E	4.275	4.30	4.325
e	0.40 BSC		

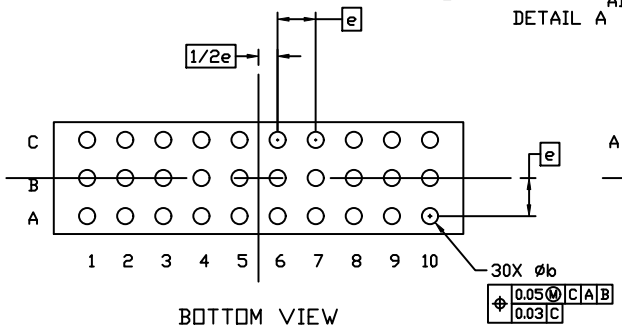

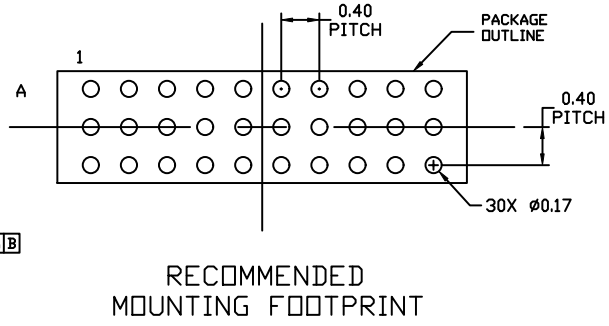

GENERIC MARKING DIAGRAM*

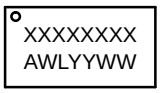

XXXXX = Specific Device Code
A = Assembly Location
WL = Wafer Lot
YY = Year
WW = Work Week

*This information is generic. Please refer to device data sheet for actual part marking. Pb−Free indicator, “G” or microdot “ ▪”, may or may not be present. Some products may not follow the Generic Marking.

DOCUMENT NUMBER:	98AON86072G	Electronic versions are uncontrolled except when accessed directly from the Document Repository. Printed versions are uncontrolled except when stamped “CONTROLLED COPY” in red.
DESCRIPTION:	WLCSP30 1.175x4.3X0.33	PAGE 1 OF 1

ON Semiconductor and ON are trademarks of Semiconductor Components Industries, LLC dba ON Semiconductor or its subsidiaries in the United States and/or other countries. ON Semiconductor reserves the right to make changes without further notice to any products herein. ON Semiconductor makes no warranty, representation or guarantee regarding the suitability of its products for any particular purpose, nor does ON Semiconductor assume any liability arising out of the application or use of any product or circuit, and specifically disclaims any and all liability, including without limitation special, consequential or incidental damages. ON Semiconductor does not convey any license under its patent rights nor the rights of others.

© Semiconductor Components Industries, LLC, 2018

onsemi, ONSEMI , and other names, marks, and brands are registered and/or common law trademarks of Semiconductor Components Industries, LLC dba "**onsemi**" or its affiliates and/or subsidiaries in the United States and/or other countries. **onsemi** owns the rights to a number of patents, trademarks, copyrights, trade secrets, and other intellectual property. A listing of **onsemi**'s product/patent coverage may be accessed at www.onsemi.com/site/pdf/Patent−Marking.pdf. **onsemi** reserves the right to make changes at any time to any products or information herein, without notice. The information herein is provided "as−is" and **onsemi** makes no warranty, representation or guarantee regarding the accuracy of the information, product features, availability, functionality, or suitability of its products for any particular purpose, nor does **onsemi** assume any liability arising out of the application or use of any product or circuit, and specifically disclaims any and all liability, including without limitation special, consequential or incidental damages. Buyer is responsible for its products and applications using **onsemi** products, including compliance with all laws, regulations and safety requirements or standards, regardless of any support or applications information provided by **onsemi**. "Typical" parameters which may be provided in **onsemi** data sheets and/or specifications can and do vary in different applications and actual performance may vary over time. All operating parameters, including "Typicals" must be validated for each customer application by customer's technical experts. **onsemi** does not convey any license under any of its intellectual property rights nor the rights of others. **onsemi** products are not designed, intended, or authorized for use as a critical component in life support systems or any FDA Class 3 medical devices or medical devices with a same or similar classification in a foreign jurisdiction or any devices intended for implantation in the human body. Should Buyer purchase or use **onsemi** products for any such unintended or unauthorized application, Buyer shall indemnify and hold **onsemi** and its officers, employees, subsidiaries, affiliates, and distributors harmless against all claims, costs, damages, and expenses, and reasonable attorney fees arising out of, directly or indirectly, any claim of personal injury or death associated with such unintended or unauthorized use, even if such claim alleges that **onsemi** was negligent regarding the design or manufacture of the part. **onsemi** is an Equal Opportunity/Affirmative Action Employer. This literature is subject to all applicable copyright laws and is not for resale in any manner.

PUBLICATION ORDERING INFORMATION

LITERATURE FULFILLMENT:
Email Requests to: orderlit@onsemi.com

onsemi Website: www.onsemi.com

TECHNICAL SUPPORT
North American Technical Support:
Voice Mail: 1 800−282−9855 Toll Free USA/Canada
Phone: 011 421 33 790 2910

Europe, Middle East and Africa Technical Support:
Phone: 00421 33 790 2910
For additional information, please contact your local Sales Representative

◊