mXT640UD-CCU001 1.0

maXTouch 640-node Touchscreen Controller Product Brief

Description

The mXT640UD-CCU001 1.0 uses a unique charge-transfer acquisition engine to implement Microchip's patented capacitive sensing method. Coupled with a state-of-the-art CPU, the entire touchscreen sensing solution can measure, classify and track a number of individual finger touches with a high degree of accuracy in the shortest response time. The mXT640UD-CCU001 1.0 allows for both mutual and self capacitance measurements, with the self capacitance measurements being used to augment the mutual capacitance measurements to produce reliable touch information.

maXTouch® Adaptive Sensing Technology

- Up to 32 X (transmit) lines and 20 Y (receive) lines for use by a touchscreen and/or key array
- A maximum of 640 nodes can be allocated to the touch sensor
- Touchscreen size of 9.66 inches (16:10 aspect ratio), assuming a sensor electrode pitch of 6.5 mm. Other sizes are possible with different electrode pitches and appropriate sensor material
- Multiple touch support with up to 16 concurrent touches tracked in real time

Keys

- Up to 32 nodes can be allocated as mutual capacitance sensor keys in addition to the touchscreen, defined as 1 key array (subject to availability of X and Y lines and other configurations)
- Support for up to 3 mutual capacitance Generic Keys in addition to the touchscreen key array (subject to other configurations)
- Adjacent Key Suppression (AKS) technology is supported for false key touch prevention

Touch Sensor Technology

- Discrete/out-cell support including glass and PET film-based sensors
- On-cell/touch-on display support including TFT, LCD (ITPS, IPS) and OLED
- Synchronization with display refresh timing capability
- Support for standard (for example, Diamond) and proprietary sensor patterns (review of designs by Microchip or a Microchip-qualified touch sensor module partner is recommended)

Front Panel Material and Design

- Works with PET or glass, including curved profiles (configuration and stack-up to be approved by Microchip or a Microchip-qualified touch sensor module partner)
- 10 mm glass (or 5 mm PMMA) with bare finger (dependent on sensor size, touch size, configuration and stack-up)
- 6 mm glass (or 3 mm PMMA) with multi-finger 5 mm glove (2.7 mm PMMA equivalent) (dependent on sensor size, touch size, configuration and stack-up)
- Support for non-rectangular sensor designs (for example, circular, rounded or with cutouts)

Touch Performance

- Moisture/Water Compensation
  - No false touch with condensation or water drop up to 22 mm diameter
  - One-finger tracking with condensation or water drop up to 22 mm diameter
- Mutual capacitance and self capacitance measurements supported for robust touch detection
- P2P mutual capacitance measurements supported for extra sensitive multi-touch sensing
- Noise suppression technology to combat ambient, charger, and power-line noise
  - Up to 240 V_{PP} between 1 Hz and 1 kHz sinusoidal waveform
  - Up to 20 V_{PP} between 1 kHz and 1 MHz sinusoidal waveform
- Stylus Support
  - Supports passive stylus with 1.5 mm contact diameter, subject to configuration, stack-up, and sensor design
- Burst Frequency
  - Flexible and dynamic Tx burst frequency selection to reduce EMC disturbance
  - Configurable Tx waveform shaping to reduce emissions

© 2021 Microchip Technology Inc.

- Scan Speed
  - Typical report rate for 10 touches ≥100 Hz (subject to configuration)
  - Initial touch latency <20 ms for first touch from idle (subject to configuration)
  - Configurable to allow for power and speed optimization
- Touch panel failure detection
  - Automatic touch sensor diagnostics during run time to support the implementation of safety critical features
  - Diagnostics reported using dedicated output pin or by standard Object Protocol messages
  - Configurable test limits

On-chip Gestures

- Reports one-touch and two-touch gestures

Enhanced Algorithms

- Lens bending algorithms to remove display noise
- Touch suppression algorithms to remove unintentional large touches, such as palm
- Palm Recovery Algorithm for quick restoration to normal state

Data Store

- 32-byte CRC-checksummed data area for use as a run-time Product Data Store Area
- Up to 64 bytes of user's custom data (not CRC checksummed)

Power Saving

- Programmable timeout for automatic transition from Active to Idle state
- Pipelined analog sensing detection and digital processing to optimize system power efficiency

Application Interfaces

- Client interface for main communication with the device. Can be one of:
  - I^2C interface, with support for Standard mode (up to 100 kHz), Fast mode (up to 400 kHz), Fast-mode Plus (up to 1 MHz), High Speed mode (up to 3.4 MHz)
  - HID-I^2C interface for Microsoft Windows 8.x and later versions
- Interrupt to indicate when a message is available
- Additional Hardware Debug Interface to read the raw data for tuning and debugging purposes

Power Supply

- Digital (Vdd) 3.3V nominal
- Digital I/O (VddIO) 3.3V nominal
- Analog (AVdd) 3.3V nominal
- High voltage internal X line drive (XVdd) 6.6V or 9.9V with internal voltage pump

Package

- 88-ball UFBGA 6 × 6 × 0.6 mm, 0.5 mm pitch

Operating Temperature

- –40°C to +85°C

Design Services

- Review of device configuration, stack-up and sensor patterns

 © 2021 Microchip Technology Inc.

PIN CONFIGURATION

88-ball UFBGA

	1	2	3	4	5	6	7	8	9	10	11
A	AVDD	DS0	Y18	Y16	Y14		Y8	Y6	Y4	Y2	Y0
B	X18		Y19	Y17	Y15		Y7	Y5	Y3		AVDD
C	X20	X19		GND	Y13		Y9	Y1		X0	X1
D	X22	X21	X17		Y12	Y11	Y10		GND	X2	X3
E	X24	X23	X25	X26				X7	X6	X4	X5
F				X27				X8			
G	X30	X31	X29	X28				X9	X10	X12	X11
H	RESV	RESV	EXTCAP1		RESV	$\overline{\text{TEST}}$	$\overline{\text{CHG}}$		GND	X14	X13
J	EXTCAP0	EXTCAP3		GND	RESV		I2CMODE	RESV		X16	X15
K	EXTCAP2		VDDIO	$\overline{\text{RESET}}$	RESV		RESV	DBG_DATA GPIO2	GKEYY2		GKEYX0
L	XVDD	VDD	VDDCORE	SCL	SDA		SYNC GPIO0	DBG_CLK GPIO1	GKEYY1	GKEYY0	XVDD

Top View

1.0 PACKAGING INFORMATION

1.1 Package Marking Information

1.1.1 88-BALL UFBGA

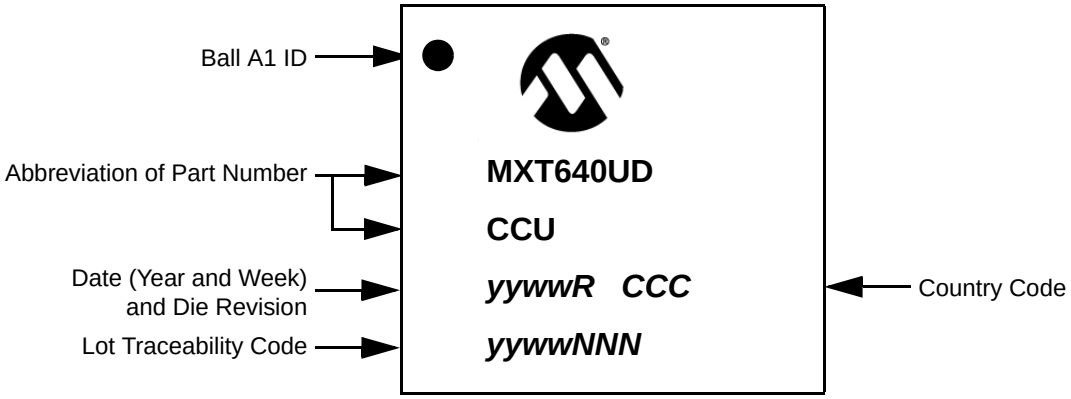

1.1.2 ORDERABLE PART NUMBERS

The product identification system for maXTouch devices is described in "Product Identification System". That section also lists example part numbers for the device.

© 2021 Microchip Technology Inc.

1.2 Package Details

88-Ball Ultra Thin Fine Pitch Ball Grid Array (BVB) - 6x6x0.6 mm Body [UFBGA]
Atmel Legacy Global Package Code CJM

Note: For the most current package drawings, please see the Microchip Packaging Specification located at http://www.microchip.com/packaging

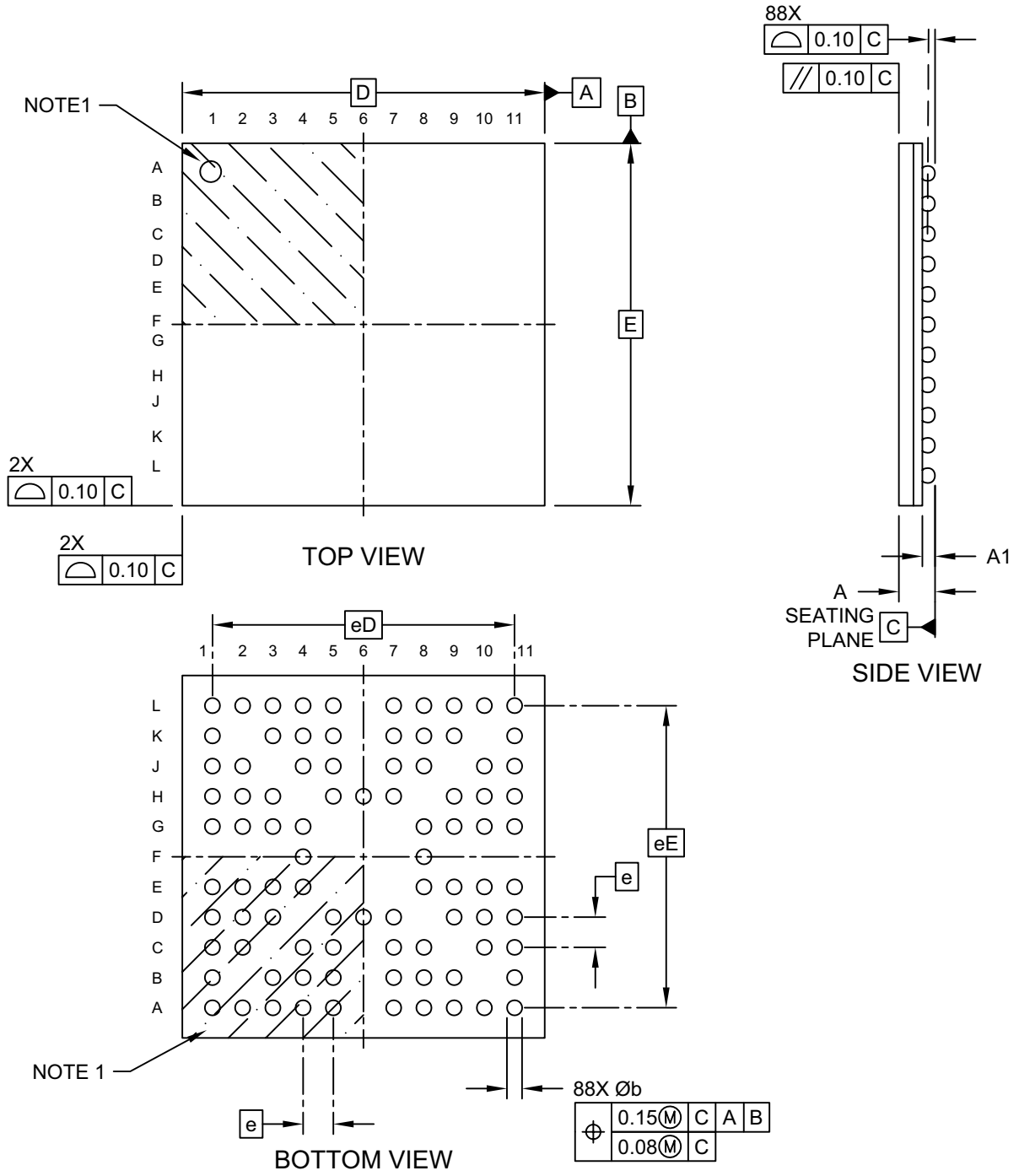

Microchip Technology Drawing C04-21158 Rev A Sheet 1 of 2

88-Ball Ultra Thin Fine Pitch Ball Grid Array (BVB) - 6x6x0.6 mm Body [UFBGA]
Atmel Legacy Global Package Code CJM

Note: For the most current package drawings, please see the Microchip Packaging Specification located at http://www.microchip.com/packaging

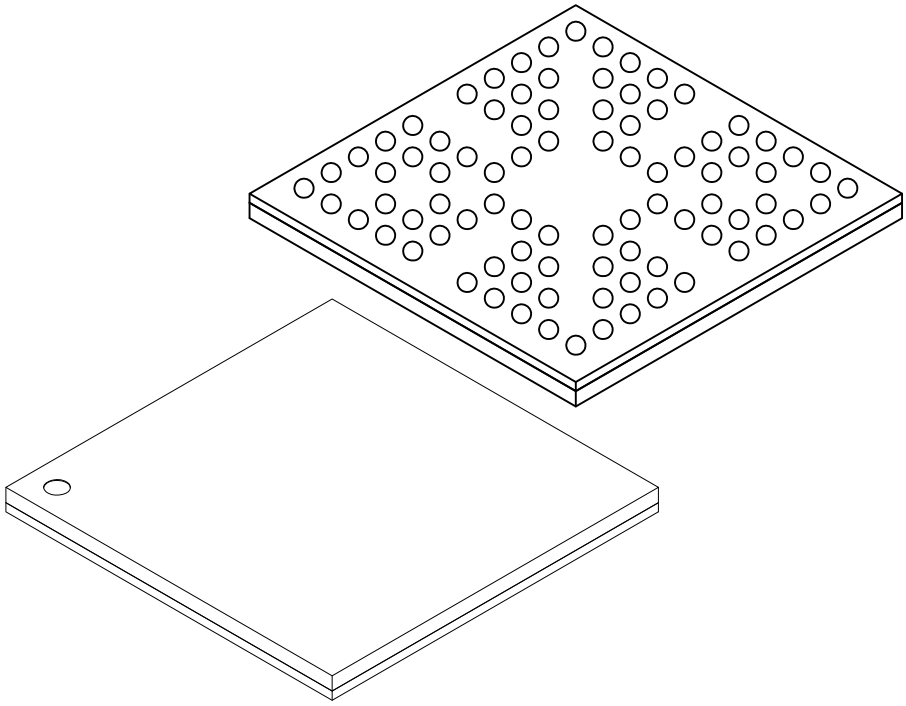

Units		MILLIMETERS		
Dimension Limits		MIN	NOM	MAX
Number of Terminals	N		88	
Pitch	e		0.50 BSC	
Overall Terminal Spacing	eD		5.00 BSC	
Overall Terminal Spacing	eE		5.00 BSC	
Overall Height	A	–	–	0.60
Standoff	A1	0.11	–	0.21
Overall Length	D		6.00 BSC	
Overall Width	E		6.00 BSC	
Terminal Diameter	b	0.22	0.25	0.28

Notes:

1. Pin 1 visual index feature may vary, but must be located within the hatched area.
2. Dimensioning and tolerancing per ASME Y14.5M

   BSC: Basic Dimension. Theoretically exact value shown without tolerances.

   REF: Reference Dimension, usually without tolerance, for information purposes only.

Microchip Technology Drawing C04-21158 Rev A Sheet 2 of 2

© 2021 Microchip Technology Inc.

88-Ball Ultra Thin Fine Pitch Ball Grid Array (BVB) - 6x6x0.6 mm Body [UFBGA]
Atmel Legacy Global Package Code CJM

Note: For the most current package drawings, please see the Microchip Packaging Specification located at http://www.microchip.com/packaging

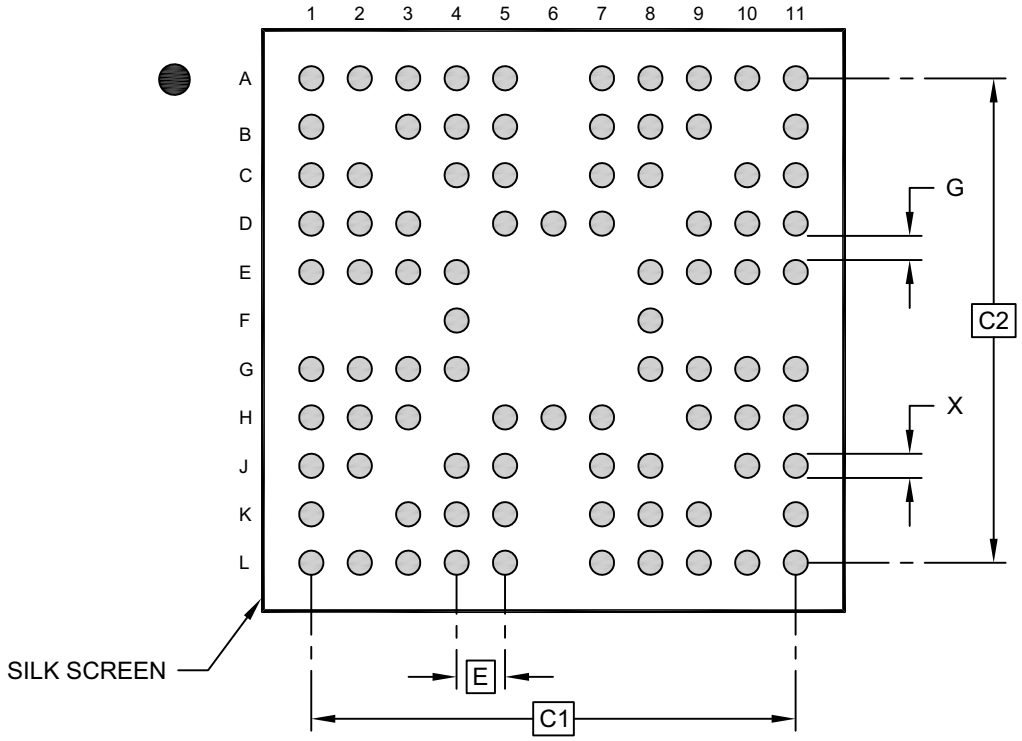

RECOMMENDED LAND PATTERN

Units		MILLIMETERS		
Dimension Limits		MIN	NOM	MAX
Contact Pitch	E	0.50 BSC		
Overall Contact Pitch	C1	5.00 BSC		
Overall Contact Pitch	C2	5.00 BSC		
Contact Pad Diameter	X			0.28
Contact Pad to Contact Pad	G	0.25		

Notes:

1. Dimensioning and tolerancing per ASME Y14.5M
   BSC: Basic Dimension. Theoretically exact value shown without tolerances.
2. For best soldering results, thermal vias, if used, should be filled or tented to avoid solder loss during reflow process

Microchip Technology Drawing C04-23158 Rev A

APPENDIX A: REVISION HISTORY

Revision A (June 2021)

Initial edition for firmware revision 1.0.AA – Release

 © 2021 Microchip Technology Inc.

PRODUCT IDENTIFICATION SYSTEM

The table below gives details on the product identification system for maXTouch devices. See "Orderable Part Numbers" below for example part numbers for the mXT640UD-CCU001.

To order or obtain information, for example on pricing or delivery, refer to the factory or the listed sales office.

PART NO.	–XXX	[X]	[X]	[XXX]
Device	Package	Temperature Range	Tape and Reel Option	Pattern

Device:	Base device name		
Package:	CC	=	UFBGA (Ultra Thin Fine-pitch Ball Grid Array)
	C2	=	UFBGA (Ultra Thin Fine-pitch Ball Grid Array)
	NH	=	UFBGA (Ultra Thin Fine-pitch Ball Grid Array)
	C4	=	X1FBGA (Extra Thin Fine-pitch Ball Grid Array)
	MA	=	XQFN (Super Thin Quad Flat No Lead Sawn)
	MA5	=	XQFN (Super Thin Quad Flat No Lead Sawn)
Temperature Range:	U	=	–40°C to +85°C (Grade 3)
	T	=	–40°C to +85°C (Grade 3)
	B	=	–40°C to +105°C (Grade 2)
Tape and Reel Option:	*Blank*	=	Standard Packaging (Tube or Tray)
	R	=	Tape and Reel (1)
Pattern:	Extension, QTP, SQTP, Code or Special Requirements (Blank Otherwise)		

Note 1: Tape and Reel identifier only appears in the catalog part number description. This identifier is used for ordering purposes and is not printed on the device package. See "Orderable Part Numbers" below or check with your Microchip Sales Office for package availability with the Tape and Reel option.

Orderable Part Numbers

Orderable Part Number	Firmware Revision	Description
ATMXT640UD-CCU001 (Supplied in trays)	1.0.AA	88-ball UFBGA 6 × 6 × 0.6 mm, RoHS compliant Industrial grade; not suitable for automotive characterization
ATMXT640UD-CCUR001 (Supplied in tape and reel)		

NOTES:

 © 2021 Microchip Technology Inc.

Note the following details of the code protection feature on Microchip devices:

- Microchip products meet the specifications contained in their particular Microchip Data Sheet.
- Microchip believes that its family of products is secure when used in the intended manner and under normal conditions.
- There are dishonest and possibly illegal methods being used in attempts to breach the code protection features of the Microchip devices. We believe that these methods require using the Microchip products in a manner outside the operating specifications contained in Microchip's Data Sheets. Attempts to breach these code protection features, most likely, cannot be accomplished without violating Microchip's intellectual property rights.
- Microchip is willing to work with any customer who is concerned about the integrity of its code.
- Neither Microchip nor any other semiconductor manufacturer can guarantee the security of its code. Code protection does not mean that we are guaranteeing the product is "unbreakable." Code protection is constantly evolving. We at Microchip are committed to continuously improving the code protection features of our products. Attempts to break Microchip's code protection feature may be a violation of the Digital Millennium Copyright Act. If such acts allow unauthorized access to your software or other copyrighted work, you may have a right to sue for relief under that Act.

Information contained in this publication is provided for the sole purpose of designing with and using Microchip products. Information regarding device applications and the like is provided only for your convenience and may be superseded by updates. It is your responsibility to ensure that your application meets with your specifications.

THIS INFORMATION IS PROVIDED BY MICROCHIP "AS IS". MICROCHIP MAKES NO REPRESENTATIONS OR WARRANTIES OF ANY KIND WHETHER EXPRESS OR IMPLIED, WRITTEN OR ORAL, STATUTORY OR OTHERWISE, RELATED TO THE INFORMATION INCLUDING BUT NOT LIMITED TO ANY IMPLIED WARRANTIES OF NON-INFRINGEMENT, MERCHANTABILITY, AND FITNESS FOR A PARTICULAR PURPOSE OR WARRANTIES RELATED TO ITS CONDITION, QUALITY, OR PERFORMANCE.

IN NO EVENT WILL MICROCHIP BE LIABLE FOR ANY INDIRECT, SPECIAL, PUNITIVE, INCIDENTAL OR CONSEQUENTIAL LOSS, DAMAGE, COST OR EXPENSE OF ANY KIND WHATSOEVER RELATED TO THE INFORMATION OR ITS USE, HOWEVER CAUSED, EVEN IF MICROCHIP HAS BEEN ADVISED OF THE POSSIBILITY OR THE DAMAGES ARE FORESEEABLE. TO THE FULLEST EXTENT ALLOWED BY LAW, MICROCHIP'S TOTAL LIABILITY ON ALL CLAIMS IN ANY WAY RELATED TO THE INFORMATION OR ITS USE WILL NOT EXCEED THE AMOUNT OF FEES, IF ANY, THAT YOU HAVE PAID DIRECTLY TO MICROCHIP FOR THE INFORMATION. Use of Microchip devices in life support and/or safety applications is entirely at the buyer's risk, and the buyer agrees to defend, indemnify and hold harmless Microchip from any and all damages, claims, suits, or expenses resulting from such use. No licenses are conveyed, implicitly or otherwise, under any Microchip intellectual property rights unless otherwise stated.

For information regarding Microchip's Quality Management Systems, please visit www.microchip.com/quality.

Trademarks

The Microchip name and logo, the Microchip logo, Adaptec, AnyRate, AVR, AVR logo, AVR Freaks, BesTime, BitCloud, chipKIT, chipKIT logo, CryptoMemory, CryptoRF, dsPIC, FlashFlex, flexPWR, HELDO, IGLOO, JukeBlox, KeeLoq, Kleer, LANCheck, LinkMD, maXStylus, maXTouch, MediaLB, megaAVR, Microsemi, Microsemi logo, MOST, MOST logo, MPLAB, OptoLyzer, PackeTime, PIC, picoPower, PICSTART, PIC32 logo, PolarFire, Prochip Designer, QTouch, SAM-BA, SenGenuity, SpyNIC, SST, SST Logo, SuperFlash, Symmetricom, SyncServer, Tachyon, TimeSource, tinyAVR, UNI/O, Vectron, and XMEGA are registered trademarks of Microchip Technology Incorporated in the U.S.A. and other countries.

AgileSwitch, APT, ClockWorks, The Embedded Control Solutions Company, EtherSynch, FlashTec, Hyper Speed Control, HyperLight Load, IntelliMOS, Libero, motorBench, mTouch, Powermite 3, Precision Edge, ProASIC, ProASIC Plus, ProASIC Plus logo, Quiet-Wire, SmartFusion, SyncWorld, Temux, TimeCesium, TimeHub, TimePictra, TimeProvider, WinPath, and ZL are registered trademarks of Microchip Technology Incorporated in the U.S.A.

Adjacent Key Suppression, AKS, Analog-for-the-Digital Age, Any Capacitor, AnyIn, AnyOut, Augmented Switching, BlueSky, BodyCom, CodeGuard, CryptoAuthentication, CryptoAutomotive, CryptoCompanion, CryptoController, dsPICDEM, dsPICDEM.net, Dynamic Average Matching, DAM, ECAN, Espresso T1S, EtherGREEN, IdealBridge, In-Circuit Serial Programming, ICSP, INICnet, Intelligent Paralleling, Inter-Chip Connectivity, JitterBlocker, maxCrypto, maxView, memBrain, Mindi, MiWi, MPASM, MPF, MPLAB Certified logo, MPLIB, MPLINK, MultiTRAK, NetDetach, Omniscient Code Generation, PICDEM, PICDEM.net, PICkit, PICtail, PowerSmart, PureSilicon, QMatrix, REAL ICE, Ripple Blocker, RTAX, RTG4, SAM-ICE, Serial Quad I/O, simpleMAP, SimpliPHY, SmartBuffer, SMART-I.S., storClad, SQI, SuperSwitcher, SuperSwitcher II, Switchtec, SynchroPHY, Total Endurance, TSHARC, USBCheck, VariSense, VectorBlox, VeriPHY, ViewSpan, WiperLock, XpressConnect, and ZENA are trademarks of Microchip Technology Incorporated in the U.S.A. and other countries.

SQTP is a service mark of Microchip Technology Incorporated in the U.S.A.

The Adaptec logo, Frequency on Demand, Silicon Storage Technology, and Symmcom are registered trademarks of Microchip Technology Inc. in other countries.

GestIC is a registered trademark of Microchip Technology Germany II GmbH & Co. KG, a subsidiary of Microchip Technology Inc., in other countries.

All other trademarks mentioned herein are property of their respective companies.

© 2021, Microchip Technology Incorporated, All Rights Reserved.

ISBN: 978-1-5224-8456-1

Worldwide Sales and Service

AMERICAS

Corporate Office
2355 West Chandler Blvd.
Chandler, AZ 85224-6199
Tel: 480-792-7200
Fax: 480-792-7277
Technical Support:
http://www.microchip.com/support
Web Address:
www.microchip.com

Atlanta
Duluth, GA
Tel: 678-957-9614
Fax: 678-957-1455

Austin, TX
Tel: 512-257-3370

Boston
Westborough, MA
Tel: 774-760-0087
Fax: 774-760-0088

Chicago
Itasca, IL
Tel: 630-285-0071
Fax: 630-285-0075

Dallas
Addison, TX
Tel: 972-818-7423
Fax: 972-818-2924

Detroit
Novi, MI
Tel: 248-848-4000

Houston, TX
Tel: 281-894-5983

Indianapolis
Noblesville, IN
Tel: 317-773-8323
Fax: 317-773-5453
Tel: 317-536-2380

Los Angeles
Mission Viejo, CA
Tel: 949-462-9523
Fax: 949-462-9608
Tel: 951-273-7800

Raleigh, NC
Tel: 919-844-7510

New York, NY
Tel: 631-435-6000

San Jose, CA
Tel: 408-735-9110
Tel: 408-436-4270

Canada - Toronto
Tel: 905-695-1980
Fax: 905-695-2078

ASIA/PACIFIC

Australia - Sydney
Tel: 61-2-9868-6733

China - Beijing
Tel: 86-10-8569-7000

China - Chengdu
Tel: 86-28-8665-5511

China - Chongqing
Tel: 86-23-8980-9588

China - Dongguan
Tel: 86-769-8702-9880

China - Guangzhou
Tel: 86-20-8755-8029

China - Hangzhou
Tel: 86-571-8792-8115

China - Hong Kong SAR
Tel: 852-2943-5100

China - Nanjing
Tel: 86-25-8473-2460

China - Qingdao
Tel: 86-532-8502-7355

China - Shanghai
Tel: 86-21-3326-8000

China - Shenyang
Tel: 86-24-2334-2829

China - Shenzhen
Tel: 86-755-8864-2200

China - Suzhou
Tel: 86-186-6233-1526

China - Wuhan
Tel: 86-27-5980-5300

China - Xian
Tel: 86-29-8833-7252

China - Xiamen
Tel: 86-592-2388138

China - Zhuhai
Tel: 86-756-3210040

ASIA/PACIFIC

India - Bangalore
Tel: 91-80-3090-4444

India - New Delhi
Tel: 91-11-4160-8631

India - Pune
Tel: 91-20-4121-0141

Japan - Osaka
Tel: 81-6-6152-7160

Japan - Tokyo
Tel: 81-3-6880- 3770

Korea - Daegu
Tel: 82-53-744-4301

Korea - Seoul
Tel: 82-2-554-7200

Malaysia - Kuala Lumpur
Tel: 60-3-7651-7906

Malaysia - Penang
Tel: 60-4-227-8870

Philippines - Manila
Tel: 63-2-634-9065

Singapore
Tel: 65-6334-8870

Taiwan - Hsin Chu
Tel: 886-3-577-8366

Taiwan - Kaohsiung
Tel: 886-7-213-7830

Taiwan - Taipei
Tel: 886-2-2508-8600

Thailand - Bangkok
Tel: 66-2-694-1351

Vietnam - Ho Chi Minh
Tel: 84-28-5448-2100

EUROPE

Austria - Wels
Tel: 43-7242-2244-39
Fax: 43-7242-2244-393

Denmark - Copenhagen
Tel: 45-4485-5910
Fax: 45-4485-2829

Finland - Espoo
Tel: 358-9-4520-820

France - Paris
Tel: 33-1-69-53-63-20
Fax: 33-1-69-30-90-79

Germany - Garching
Tel: 49-8931-9700

Germany - Haan
Tel: 49-2129-3766400

Germany - Heilbronn
Tel: 49-7131-72400

Germany - Karlsruhe
Tel: 49-721-625370

Germany - Munich
Tel: 49-89-627-144-0
Fax: 49-89-627-144-44

Germany - Rosenheim
Tel: 49-8031-354-560

Israel - Ra'anana
Tel: 972-9-744-7705

Italy - Milan
Tel: 39-0331-742611
Fax: 39-0331-466781

Italy - Padova
Tel: 39-049-7625286

Netherlands - Drunen
Tel: 31-416-690399
Fax: 31-416-690340

Norway - Trondheim
Tel: 47-7288-4388

Poland - Warsaw
Tel: 48-22-3325737

Romania - Bucharest
Tel: 40-21-407-87-50

Spain - Madrid
Tel: 34-91-708-08-90
Fax: 34-91-708-08-91

Sweden - Gothenberg
Tel: 46-31-704-60-40

Sweden - Stockholm
Tel: 46-8-5090-4654

UK - Wokingham
Tel: 44-118-921-5800
Fax: 44-118-921-5820

© 2021 Microchip Technology Inc