CUI DEVICES

SERIES: PT01 | DESCRIPTION: ROTARY POTENTIOMETER

FEATURES

- carbon element
- wide variety of mounting styles
- multiple shaft options
- available with center detent
- linear, logarithmic, and reverse logarithmic tapers



RoHS

SPECIFICATIONS

parameter	conditions/description	min	typ	max	units
maximum operating voltage	linear and logarithmic (audio)			20 50	Vdc Vac
power rating	linear and logarithmic (audio)			0.05	W
taper	linear and logarithmic (audio)				
standard resistance range	see Resistance Table	1.0		1,000	kΩ
standard resistance tolerance			±20		%
resisdual resistance	50 Ω or ±1% max				
sliding noise				68	mV
operating temperature		-10		60	°C
hand soldering	for 3 seconds max			300	°C
RoHS	yes				

MECHANICAL

parameter	conditions/description	min	typ	max	units
mechanical angle		275	280	285	°
rotational torque		10		150	gf-cm
detent torque		20		200	gf-cm
stop strength		2			kg-cm
rotational life			10,000		cycles
weight			2.5		g

PART NUMBER KEY

PT01 - X X XX X - X XXX

Base Number

Terminal Configuration:
A = Horizontal/Rear Mount w/Sleeve Bushing
B = Vertical/Side Mount, Bushingless, 10 mm Height
C = Vertical/Side Mount, Bushingless, 6.5 mm Height
D = Horizontal/Rear Mount, Bushingless
E = Horizontal/Rear Mount w/Plastic Plain Bushing
F = Horizontal/Rear Mount w/Metal Threaded Bushing
G = Vertical/Side Mount w/Sleeve Bushing, 6.5 mm Height
H = Vertical/Side Mount w/Sleeve Bushing, 10 mm Height

Detent:
1 = No Detent
2 = Center Detent

Shaft Length:
15 = 15 mm
20 = 20 mm
25 = 25 mm
30 = 30 mm

Shaft Style:
D = D-cut
K1 = Knurled (18 teeth)
K2 = Knurled (40 teeth)

Resistance Taper:
A = Reverse Logarithmic
B = Linear
C = Logarithmic

Resistance (Ω):
102 = 1,000
202 = 2,000
502 = 5,000
103 = 10,000
203 = 20,000
503 = 50,000
104 = 100,000
204 = 200,000
504 = 500,000
105 = 1,000,000

SCHEMATIC/TAPERS

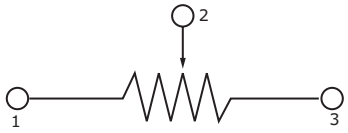

Resistance Table	
Resistance (Ω)	Code
1,000	102
2,000	202
5,000	502
10,000	103
20,000	203
50,000	503
100,000	104
200,000	204
500,000	504
1,000,000	105

A (Reverse Logarithmic Tapers)

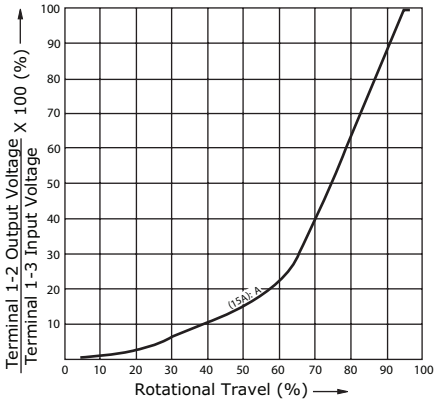

B (Linear Tapers)

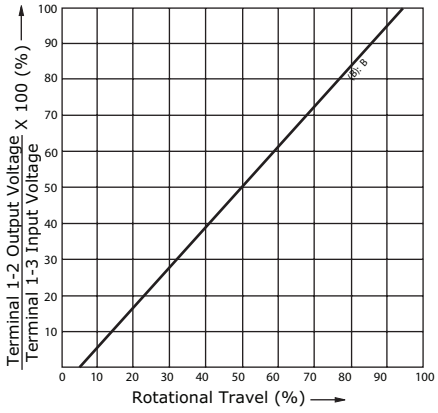

C (Logarithmic Tapers)

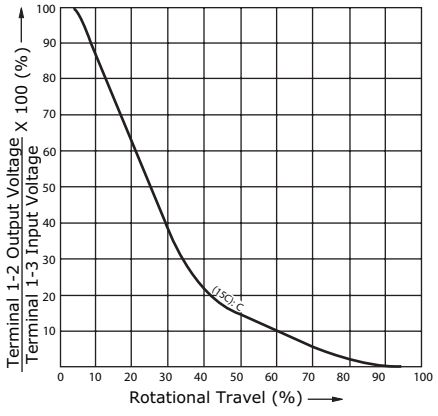

SHAFT TYPES

units: mm [inch]
tolerance: ±0.3 mm
unless otherwise noted

D Type

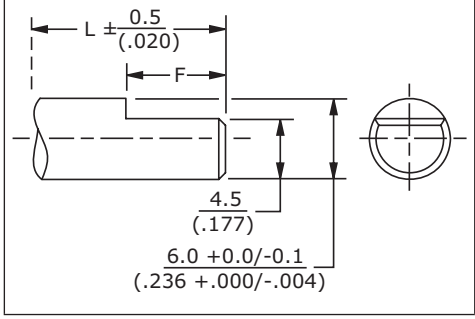

	15D	20D	25D	30D
L	15	20	25	30
F	6	7	12	12

K1 Type

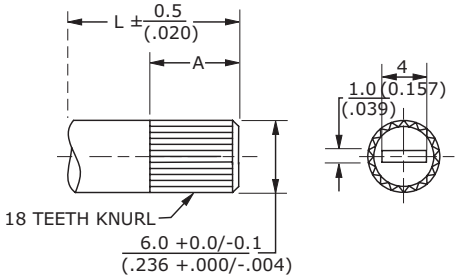

	15K1	20K1	25K1	30K1
L	15	20	25	30
A	6	7	12	12

K2 Type

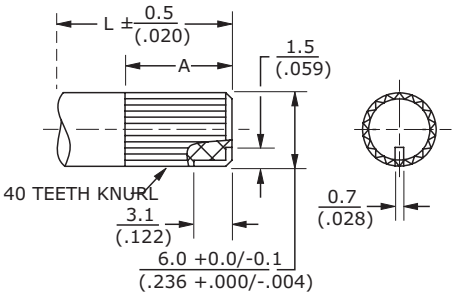

	15K2	20K2	25K2	30K2
L	15	20	25	30
A	6	7	12	12

MECHANICAL DRAWING (HORIZONTAL/REAR MOUNT W/SLEEVE BUSHING)

units: mm [inch]
tolerance:
X≤10: ±0.3 mm
10<X≤30: ±0.5 mm
30<X≤100: ±1.0 mm
unless otherwise noted

ITEM	DESCRIPTION	MATERIAL	PLATING/COLOR
A	base	PBT (UL94V-0)	black
B	shaft	PC (UL94V-0)	black
C	reed	nickel-zinc alloy	
D	bracket	iron	bright tin
E	terminals	cold rolled steel	dark tin

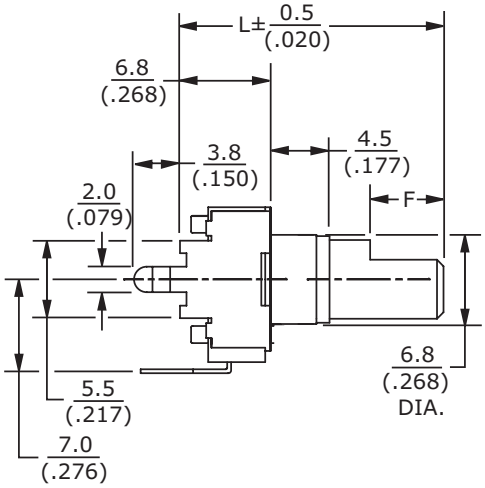

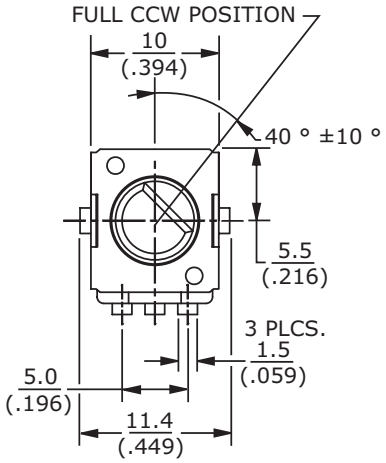

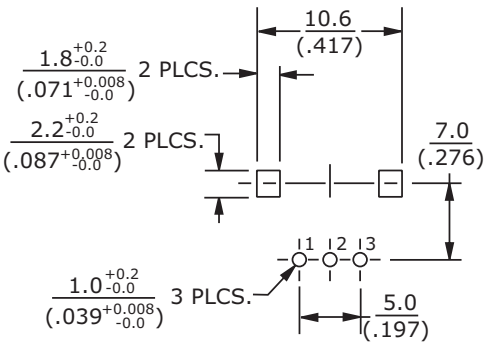

Recommended PCB Layout
Top View

MECHANICAL DRAWING (VERTICAL/SIDE MOUNT, BUSHINGLESS, 10 MM HEIGHT)

units: mm [inch]
tolerance:
X≤10: ±0.3 mm
10<X≤30: ±0.5 mm
30<X≤100: ±1.0 mm
unless otherwise noted

ITEM	DESCRIPTION	MATERIAL	PLATING/COLOR
A	base	PBT (UL94V-0)	black
B	shaft	PC (UL94V-0)	black
C	reed	nickel-zinc alloy	
D	bracket	iron	bright tin
E	terminals	cold rolled steel	dark tin

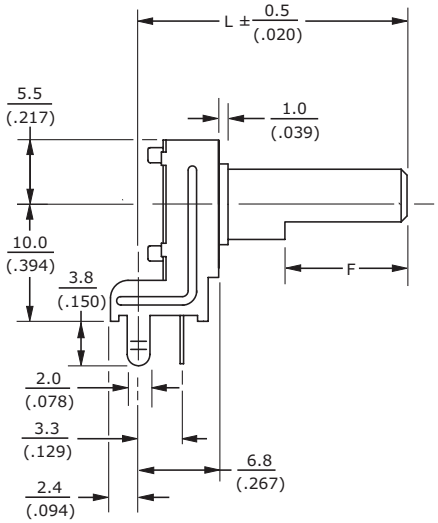

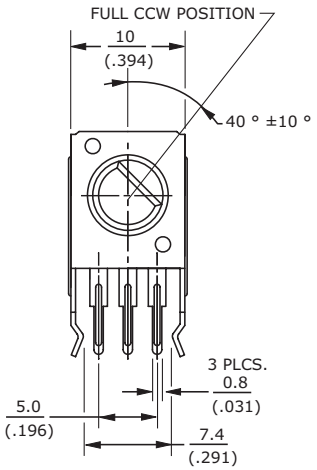

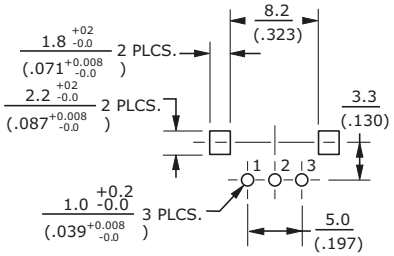

Recommended PCB Layout
Top View

MECHANICAL DRAWING (VERTICAL/SIDE MOUNT, BUSHINGLESS, 6.5 MM HEIGHT)

units: mm [inch]
tolerance:
X≤10: ±0.3 mm
10<X≤30: ±0.5 mm
30<X≤100: ±1.0 mm
unless otherwise noted

ITEM	DESCRIPTION	MATERIAL	PLATING/COLOR
A	base	PBT (UL94V-0)	black
B	shaft	PC (UL94V-0)	black
C	reed	nickel-zinc alloy	
D	bracket	iron	bright tin
E	terminals	cold rolled steel	dark tin

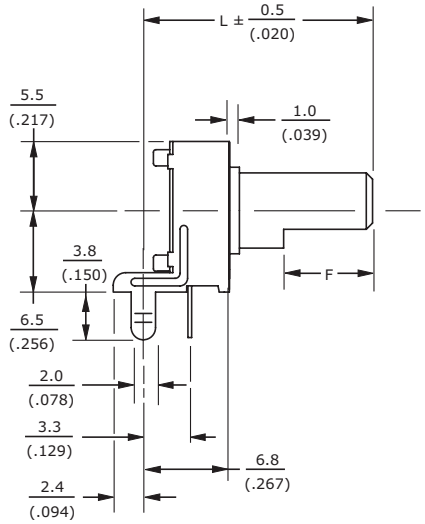

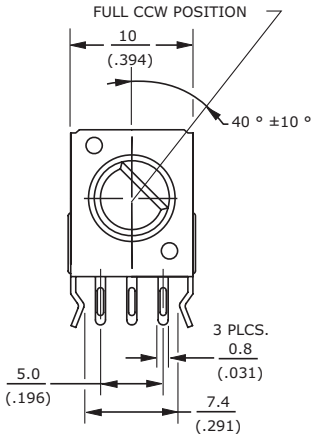

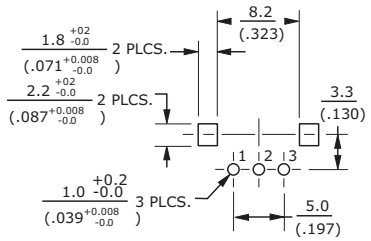

Recommended PCB Layout
Top View

MECHANICAL DRAWING (HORIZONTAL/REAR MOUNT, BUSHINGLESS)

units: mm [inch]
tolerance:
X≤10: ±0.3 mm
10<X≤30: ±0.5 mm
30<X≤100: ±1.0 mm
unless otherwise noted

ITEM	DESCRIPTION	MATERIAL	PLATING/COLOR
A	base	PBT (UL94V-0)	black
B	shaft	PC (UL94V-0)	black
C	reed	nickel-zinc alloy	
D	bracket	iron	bright tin
E	terminals	cold rolled steel	dark tin

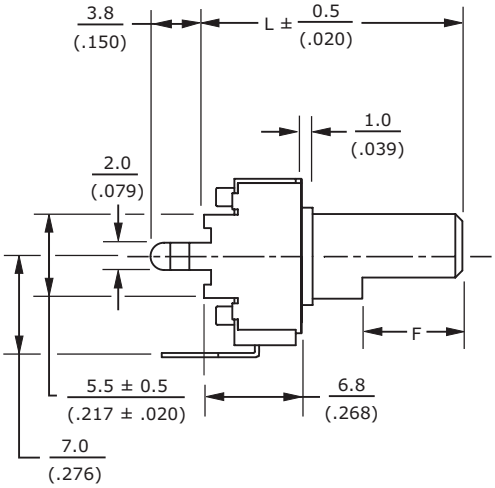

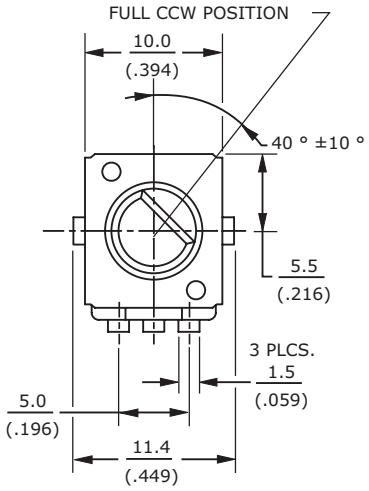

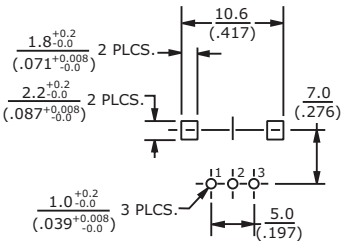

Recommended PCB Layout
Top View

MECHANICAL DRAWING (HORIZONTAL/REAR MOUNT W/PLASTIC PLAIN BUSHING)

units: mm [inch]
tolerance:
X≤10: ±0.3 mm
10<X≤30: ±0.5 mm
30<X≤100: ±1.0 mm
unless otherwise noted

ITEM	DESCRIPTION	MATERIAL	PLATING/COLOR
A	base	PBT (UL94V-0)	black
B	shaft	PC (UL94V-0)	black
C	reed	nickel-zinc alloy	
D	bracket	iron	bright tin
E	terminals	cold rolled steel	dark tin

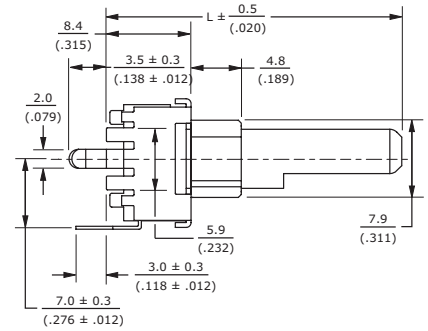

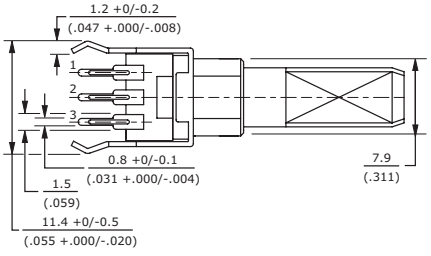

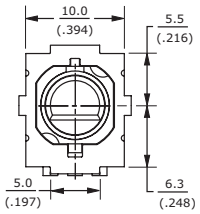

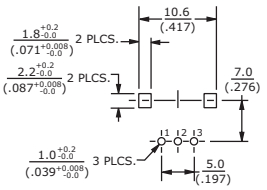

Recommended PCB Layout
Top View

MECHANICAL DRAWING (HORIZONTAL/REAR MOUNT W/METAL THREADED BUSHING)

units: mm [inch]
tolerance:
X≤10: ±0.3 mm
10<X≤30: ±0.5 mm
30<X≤100: ±1.0 mm
unless otherwise noted

ITEM	DESCRIPTION	MATERIAL	PLATING/COLOR
A	base	PBT (UL94V-0)	black
B	shaft	PC (UL94V-0)	black
C	reed	nickel-zinc alloy	
D	bracket	iron	bright tin
E	terminals	cold rolled steel	dark tin

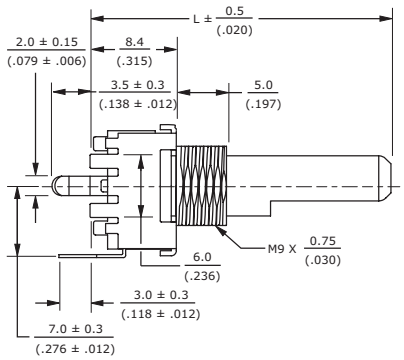

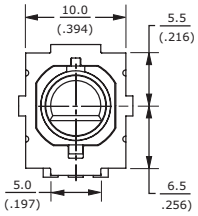

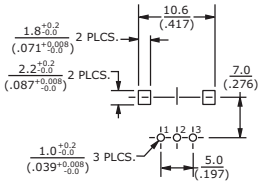

Recommended PCB Layout
Top View

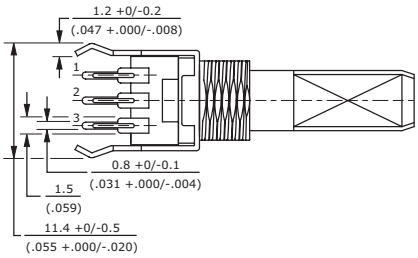

MECHANICAL DRAWING (VERTICAL/SIDE MOUNT W/SLEEVE BUSHING, 6.5 MM HEIGHT)

units: mm [inch]
tolerance:
X≤10: ±0.3 mm
10<X≤30: ±0.5 mm
30<X≤100: ±1.0 mm
unless otherwise noted

ITEM	DESCRIPTION	MATERIAL	PLATING/COLOR
A	base	PBT (UL94V-0)	black
B	shaft	PC (UL94V-0)	black
C	reed	nickel-zinc alloy	
D	bracket	iron	bright tin
E	terminals	cold rolled steel	dark tin

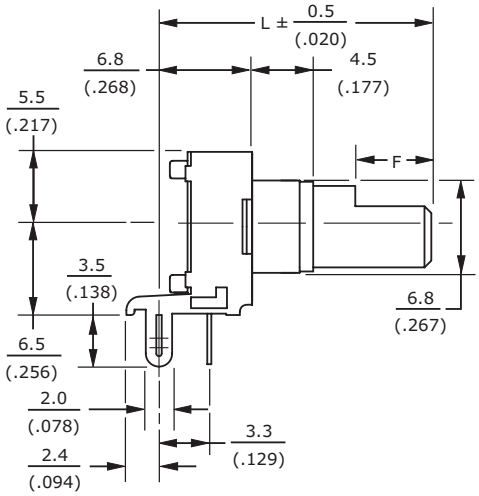

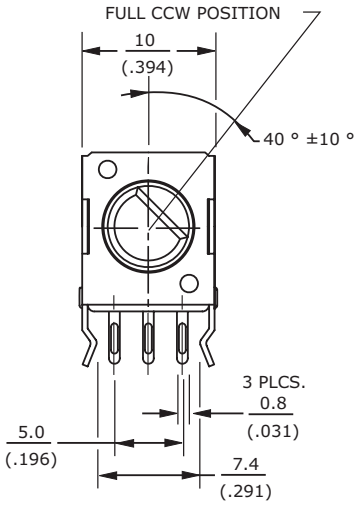

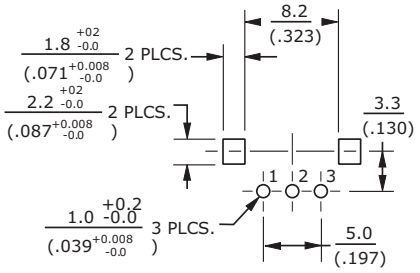

Recommended PCB Layout
Top View

MECHANICAL DRAWING (VERTICAL/SIDE MOUNT W/SLEEVE BUSHING, 10 MM HEIGHT)

units: mm [inch]
tolerance:
X≤10: ±0.3 mm
10<X≤30: ±0.5 mm
30<X≤100: ±1.0 mm
unless otherwise noted

ITEM	DESCRIPTION	MATERIAL	PLATING/COLOR
A	base	PBT (UL94V-0)	black
B	shaft	PC (UL94V-0)	black
C	reed	nickel-zinc alloy	
D	bracket	iron	bright tin
E	terminals	cold rolled steel	dark tin

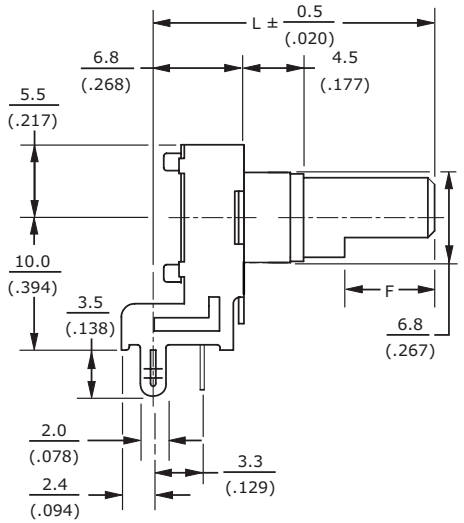

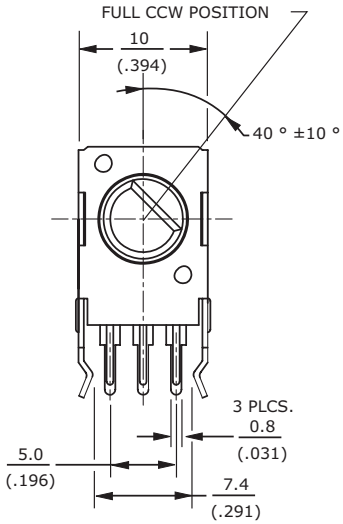

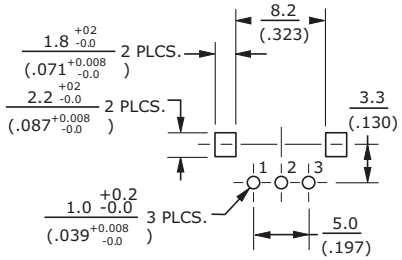

Recommended PCB Layout
Top View

MOUNTING HARDWARE

units: mm [inch]

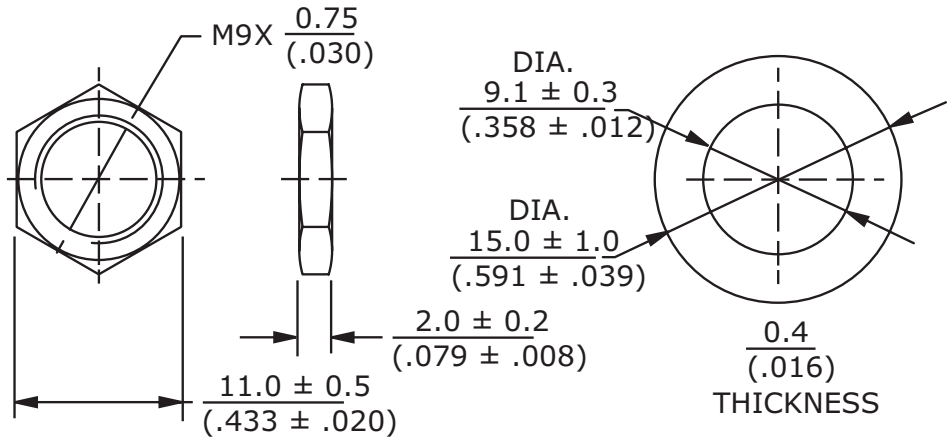

Note: Hex nut and washer supplied with threaded bushing version.

REVISION HISTORY

rev.	description	date
1.0	initial release	12/15/2021

The revision history provided is for informational purposes only and is believed to be accurate.

CUI DEVICES

CUI Devices offers a one (1) year limited warranty. Complete warranty information is listed on our website.

CUI Devices reserves the right to make changes to the product at any time without notice. Information provided by CUI Devices is believed to be accurate and reliable. However, no responsibility is assumed by CUI Devices for its use, nor for any infringements of patents or other rights of third parties which may result from its use.

CUI Devices products are not authorized or warranted for use as critical components in equipment that requires an extremely high level of reliability. A critical component is any component of a life support device or system whose failure to perform can be reasonably expected to cause the failure of the life support device or system, or to affect its safety or effectiveness.

cuidevices.com