150-mA Low Noise, Low Dropout Regulator

DESCRIPTION

The SiP21106 BiCMOS 150 mA low noise LDO voltage regulators are the perfect choice for low battery operated low powered applications. An ultra low ground current and low dropout voltage of 135 mV at 150 mA load helps to extend battery life for portable electronics. Systems requiring a quiet voltage source, such as RF applications, will benefit from the SiP21106 low output noise.

The SiP21107 do not require a noise bypass capacitor and provides an error flag pin (POK or Power OK). POK output requires an external pull-up resistor and goes low when the supply has not come up to voltage.

The SiP21108 output is adjusted with an external resistor network.

The SiP21106, SiP21107, SiP21108 regulators allow stable operation with very small ceramic output capacitors, reducing board space and component cost. They are designed to maintain regulation while delivering 330 mA peak current upon turn-on. During start-up, an active pull-down circuit improves the output transient response and regulation. In shutdown mode, the output automatically discharges to ground through a 100 Ω NMOS.

The SiP21106, SiP21107, SiP21108 are available in TSOT23-5L a super thin lead (Pb)-free TSC75-6L and SC70-5L packages for operation over the industrial operation range (- 40 °C to 85 °C).

FEATURES

Pb-free

RoHS COMPLIANT

- SC70-5L (2.1 mm x 2.1 mm x 0.95 mm)
- TSOT23-5L (3.05 mm x 2.85 mm x 1.0 mm)
- TSC75-6L package (1.6 mm x 1.6 mm x 0.55 mm), TSOT23-5L and SC70-5L Package Options
- 1.0 % output voltage accuracy at 25 °C
- Low dropout voltage: 135 mV at 150 mA
- SiP21106 low noise: 60 $\mu V_{(rms)}$ (10 Hz to 100 kHz bandwidth) with 10 nF over full load range
- 35 µA (typical) ground current at 1 mA load
- 1 µA maximum shutdown current at 85 °C
- Output auto discharge at shutdown mode
- Built-in short circuit (330 mA typical) and thermal protection (160 °C typical)
- SiP21108 adjustable output voltage
- SiP21107 POK Error Flag
- - 40 °C to + 125 °C junction temperature range for operation
- Uses low ESR ceramic capacitors
- Fixed voltage output 1.2 V to 5 V in 50 mV steps
- Compliant to RoHS Directive 2002/95/EC

APPLICATIONS

- Cellular phones, wireless handsets
- PDAs
- MP3 players
- Digital cameras
- Pagers
- Wireless modem
- Noise-sensitive electronic systems

TYPICAL APPLICATION CIRCUIT

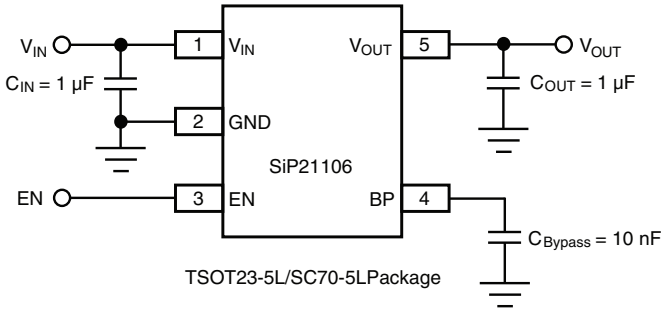

TSOT23-5L/SC70-5LPackage

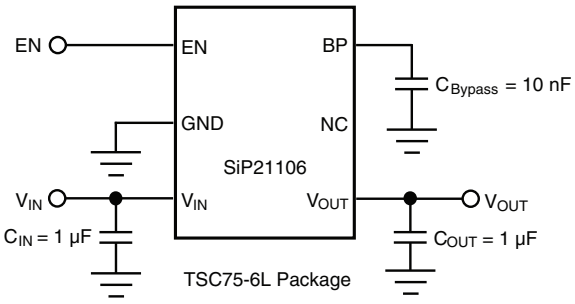

TSC75-6L Package

TYPICAL APPLICATION CIRCUIT

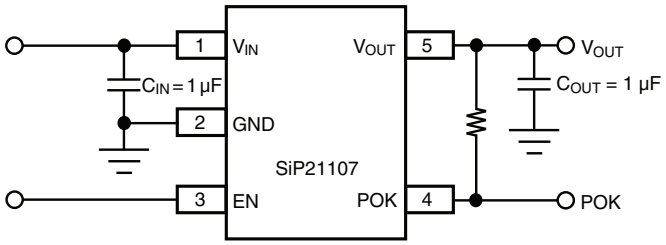

TSOT23-5L/SC70-5LPackage

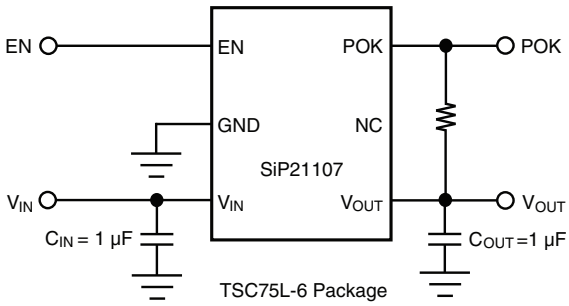

TSC75L-6 Package

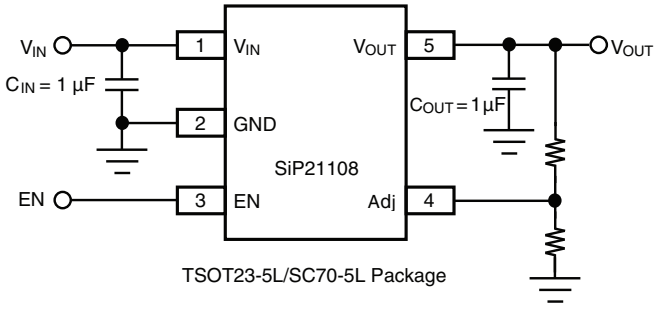

TSOT23-5L/SC70-5L Package

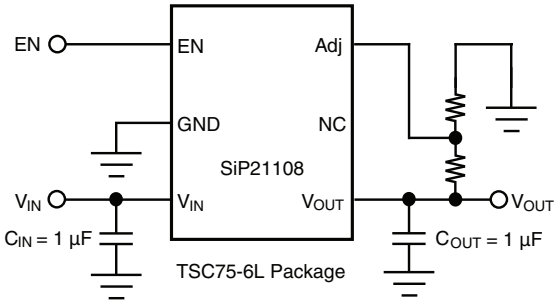

TSC75-6L Package

ABSOLUTE MAXIMUM RATINGS				
Parameter	**Limit**			**Unit**
Input Voltage, V_{IN} to GND	- 0.3 to 6.5			V
V_{EN} (See Detailed Description)	- 0.3 to 6.5			
Output Current (I_{OUT})	Short Circuit Protected			
Output Voltage (V_{OUT})	- 0.3 to V_{IN} + 0.3			V
	TSC75-6L	TSOT23-5L	SC70-5L	
Package Power Dissipation (P_D)[a]	420	305	187	mW
Package Thermal Resistance (θ_{JA})[b]	131	180	294	°C/W
Maximum Junction Temperature, $T_{J(max)}$	125			°C
Storage Temperature, T_{STG}	- 65 to 150			
Lead Temperature, T_L[c]	260			

Notes:
a. Derate 7.6 mW/°C for TSC75-6L package, 5.5 mW/°C for TSOT23-5L and 3.4 mW/°C for SC70-5L package above T_A = 70 °C.
b. Device mounted with all leads soldered or welded to multilayer 1S2P PC board.
c. Soldering for 5 s.

Stresses beyond those listed under "Absolute Maximum Ratings" may cause permanent damage to the device. These are stress ratings only, and functional operation of the device at these or any other conditions beyond those indicated in the operational sections of the specifications is not implied. Exposure to absolute maximum rating/conditions for extended periods may affect device reliability.

RECOMMENDED OPERATING RANGE		
Parameter	**Limit**	**Unit**
Input Voltage, V_{IN}	2.2 to 6	V
Operating Ambient Temperature T_A	- 40 to 85	°C

SPECIFICATIONS

Parameter	Symbol	Test Conditions Unless Specified $V_{IN} = V_{OUT(nom)} + 1.0\ V = V_{EN}$ $I_{OUT} = 1\ mA$, $C_{IN} = 1\ \mu F$, $C_{OUT} = 1\ \mu F$ $-40\ °C < T_A < 85\ °C$ for full		Temp.[a]	Min.[b]	Typ.[c]	Max.[b]	Unit
Input Voltage Range	V_{IN}			Full	2.2		6	V
Output Voltage Accuracy	V_{OUT}	$I_{OUT} = 1\ mA$		Room	- 1.0		1.0	%
				Full	- 2.5		2.5	
		SiP21106/7 (1.2 V) $I_{OUT} = 1\ mA$		Room	- 1.5		1.5	
				Full	- 4		4	
Feedback Voltage (SiP21108 Version only)	V_{Adj}			Room	1.188	1.2	1.212	V
				Full	1.170		1.230	
Line Regulation	LNR			Full	- 0.2	0.006	0.2	%/V
Load Regulation	LDR	$V_{OUT} \geq 2.6\ V$, I_{OUT}: 1 mA to 150 mA		Room		0.003	0.006	%/mA
		$V_{OUT} < 2.6\ V$, I_{OUT}: 1 mA to 150 mA		Room		0.005	0.009	
Ground Pin Current[e]	I_{GND}	$I_{OUT} = 1\ mA$		Room		35	75	µA
				Full			85	
		$I_{OUT} = 150\ mA$		Room		39	75	
				Full			85	
Shutdown Supply Current	$I_{CC(off)}$	$V_{EN} = 0\ V$		Full		0.02	1	µA
Output Noise Voltage[f] (RMS)	e_N	SiP21106 $V_{OUT(nom)} = 2.8\ V$, BW = 10 Hz to 100 kHz, $1\ mA < I_{OUT} < 150\ mA$, $C_{BP} = 0.01\ \mu F$		Room		60		µV
		SiP21107/8 $V_{OUT(nom)} = 2.8\ V$, BW = 10 Hz to 100 kHz, $1\ mA < I_{OUT} < 150\ mA$		Room		350		
Output Voltage Turn-On Time	t_{on}	EN to V_{OUT} delay; $I_{OUT} = 1\ mA$				70		µs
Ripple Rejection	PSRR	SiP21106, $C_{BP} = 0.01\ \mu F$ $I_{OUT} = 10\ mA$	f = 1 kHz	Room		75		dB
			f = 10 kHz	Room		56		
			f = 100 kHz	Room		40		
		SiP21107/8 SiP21106, $C_{BP} = 0\ \mu F$ $I_{OUT} = 10\ mA$	f = 1 kHz	Room		72		
			f = 10 kHz	Room		53		
			f = 100 kHz	Room		38		
Output Current Limit	I_{O_LIM}	$V_{OUT} = 0\ V$		Room	170	330	600	mA
Auto Discharge Resistance	R_{DIS}	EN = 0 V, $V_{OUT} = 1\ V$		Room		100		Ω
		For $V_{OUT} < 2.2\ V$, EN = 0 V, $V_{OUT} = 1\ V$		Room		120		
Dropout Voltage[d] $(2.2\ V \leq V_{OUT(nom)} < 2.6\ V)$	V_{DO}	$I_{OUT} = 50\ mA$		Room		45		mV
				Full		55		
		$I_{OUT} = 100\ mA$		Room		90		
				Full		106		
		$I_{OUT} = 150\ mA$		Room		135	250	
				Full		160	300	
Dropout Voltage $(V_{OUT(nom)} \geq 2.6\ V)$	V_{DO}	$I_{OUT} = 50\ mA$		Room		45		
				Full		55		
		$I_{OUT} = 100\ mA$		Room		90		
				Full		106		
		$I_{OUT} = 150\ mA$		Room		135	180	
				Full		160	220	
EN Pin Input Voltage	V_{ENH}	High = Regulator On (Rising)		Full	1.2			V
	V_{ENL}	Low = Regulator Off (Falling)		Full			0.4	
EN Pin Input Current	I_{EN}			Room		0.009		µA

SPECIFICATIONS							
Parameter	**Symbol**	**Test Conditions Unless Specified** $V_{IN} = V_{OUT(nom)} + 1.0$ V, I_{OUT} = 1 mA, C_{IN} = 1 µF, C_{OUT} = 1 µF, - 40 °C < T_A < 85 °C for full	**Temp.[a]**	**Min.[b]**	**Typ.[c]**	**Max.[b]**	**Unit**
Thermal Shutdown Junction Temperature	$T_{J(S/D)}$		Room		160		°C
Thermal Hysteresis	T_{HYST}		Room		20		
Error Flag Section (SiP21107 Version only)							
POK(OFF) Leakage	I_{OFF}	R_{PU} to V_{OUT} or V_{IN}	Full			1	µA
POK(ON) Voltage	V_{POKL}	EN = 0 V, I_{POK} = 0.5 mA	Full			0.4	V
POK Threshold[g]	V_{POKLH}	V_{OUT} rising, POK goes high, $V_{OUT(nom)} \geq 2.2$ V, I_{OUT} = 1 mA	Full	90	93	96	%
		V_{OUT} rising, POK goes high, $V_{OUT(nom)} < 2.2$ V, I_{OUT} = 1 mA			91		
POK Hysteresis	V_{HYST}	V_{IN} falling, I_{OUT} = 1 mA, POK goes low	Room		1.5		
POK Voltage Delay Time	T_{P_Delay}	V_{OUT} to POK delay, I_{OUT} = 1 mA			40		µs

Notes:

a. Room = 25 °C, Full = - 40 to 85 °C. Derate 7.6 mW/°C for TSC75 and 5.5 mW/°C for SOT23 above T_A = 70 °C.

b. The algebraic convention whereby the most negative value is a minimum and the most positive a maximum.

c. Typical values are for DESIGN AID ONLY, not guaranteed nor subject to production testing.

d. Dropout voltage is defined as the input-to-output differential voltage at which the output voltage drops 2 % below its nominal value with constant load. For outputs = 2.2 V, dropout voltage is not applicable due to 2.2 V minimum input voltage requirement.

e. Ground current is specified for normal operation as well as “drop-out” operation.

f. Output noise is proportional to output voltage. Use formula e_N = 60 µV(rms)*V_{OUT}/2.8 V.

g. POK threshold percentage is calculated by V_{IN}/V_{OUT} x 100 %. The POK is measured with a differential voltage across V_{IN} and V_{OUT} until POK turn on (low threshold) or off (high threshold). For V_{OUT} less than 2.2 V, POK is guaranteed functionality only.

TIMING WAVEFORMS

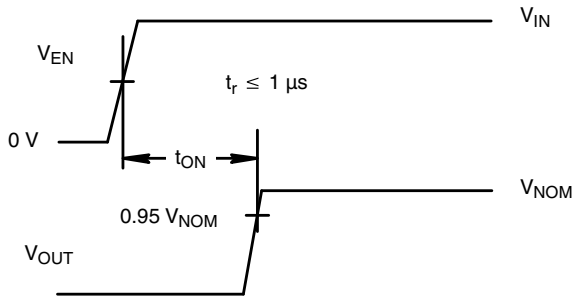

Figure 1.

PIN CONFIGURATION

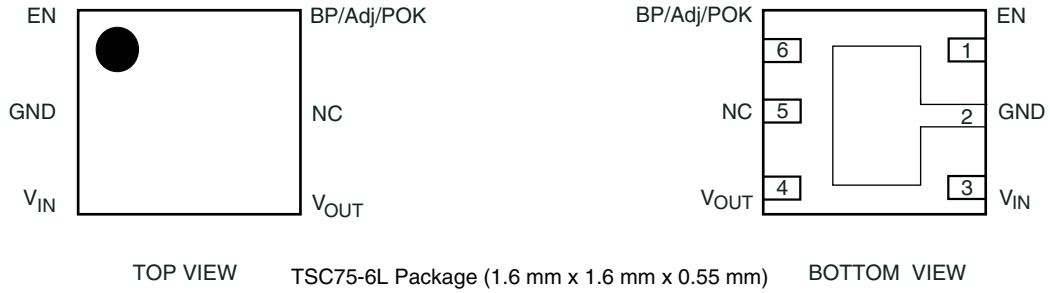

TSC75-6L Package (1.6 mm x 1.6 mm x 0.55 mm)

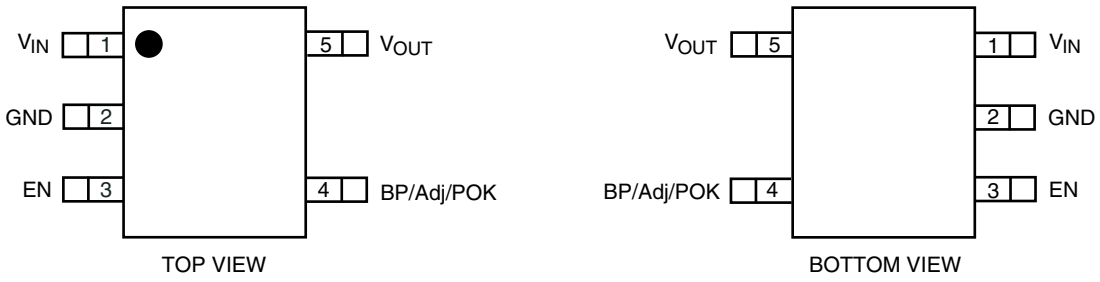

TSOT23-5L/SC70-5LPackage

Figure 2.

PIN DESCRIPTION			
Pin Number TSC75-6L	**Pin Number TSOT23-5L/ SC70-5L**	**Name**	**Function**
1	3	EN	By applying less than 0.4 V to this pin, the device will be turned off. Connect this pin to V_{IN} if unused. Do not leave floating.
2	2	GND	Ground pin. For better thermal capability, directly connected to large ground plane.
3	1	V_{IN}	Input supply pin. Bypass this pin with a 1 µF ceramic or tantalum capacitor to ground.
4	5	V_{OUT}	Output voltage. Connect C_{OUT} between this pin and ground.
5	-	NC	No Connection.
6	4	BP/Adj/POK	- BP (SiP21106): Noise bypass pin. For low noise applications, a 10 nF ceramic capacitor should be connected from this pin to ground. - Adj (SiP21108): Adjust input pin. Connect feedback resistors to program the output voltage for trim value of 1.2005 V. - POK (SiP21107): Power OK (error flag) pin. Open-drain output, which requires connecting a pull-up resistor to V_{IN} or V_{OUT}. POK pin is actively high to indicate an output normal operation condition on regulator and goes low to indicate under-voltage fault condition.

ORDERING INFORMATION

Part Number	Marking	Voltage	Temperature Range	Package
SiP21108DVP-T1-E3	AA	Adjustable	- 40 °C to 85 °C	TSC75-6L
SiP21106DVP-12-E3	BA	1.2		
SiP21106DVP-18-E3	BG	1.8		
SiP21106DVP-25-E3	BP	2.5		
SiP21106DVP-26-E3	BR	2.6		
SiP21106DVP-28-E3	BT	2.8		
SiP21106DVP-285-E3	CT	2.85		
SiP21106DVP-30-E3	BV	3		
SiP21106DVP-33-E3	BY	3.3		
SiP21106DVP-46-E3	CM	4.6		
SiP21106DVP-475-E3	CU	4.75		
SiP21107DVP-12-E3	DA	1.2		
SiP21107DVP-18-E3	DG	1.8		
SiP21107DVP-25-E3	DP	2.5		
SiP21107DVP-26-E3	DR	2.6		
SiP21107DVP-28-E3	DT	2.8		
SiP21107DVP-30-E3	DV	3		
SiP21107DVP-33-E3	DY	3.3		
SiP21107DVP-46-E3	EM	4.6		
SiP21107DVP-285-E3	ET	2.85		
SiP21108DT-T1-E3	N9	Adjustable	- 40 °C to 85 °C	TSOT23-5L
SiP21106DT-12-E3	NP	1.2		
SiP21106DT-18-E3	N1	1.8		
SiP21106DT-25-E3	NA	2.5		
SiP21106DT-26-E3	NC	2.6		
SiP21106DT-28-E3	N2	2.8		
SiP21106DT-285-E3	NE	2.85		
SiP21106DT-30-E3	NG	3		
SiP21106DT-33-E3	N3	3.3		
SiP21106DT-45-E3	NM	4.5		
SiP21106DT-46-E3	N4	4.6		
SiP21106DT-475-E3	NJ	4.75		
SiP21107DT-12-E3	NQ	1.2		
SiP21107DT-18-E3	N5	1.8		
SiP21107DT-25-E3	NB	2.5		
SiP21107DT-26-E3	ND	2.6		
SiP21107DT-28-E3	N6	2.8		
SiP21107DT-285-E3	NF	2.85		
SiP21107DT-30-E3	NH	3		
SiP21107DT-33-E3	N7	3.3		
SiP21107DT-46-E3	N8	4.6		

ORDERING INFORMATION				
SiP21108DR-T1-E3	N9	Adjustable	- 40 °C to 85 °C	SC70-5L
SiP21106DR-12-E3	NP	1.2		
SiP21106DR-18-E3	N1	1.8		
SiP21106DR-25-E3	NA	2.5		
SiP21106DR-26-E3	NC	2.6		
SiP21106DR-28-E3	N2	2.8		
SiP21106DR-285-E3	NE	2.85		
SiP21106DR-30-E3	NG	3		
SiP21106DR-33-E3	N3	3.3		
SiP21106DR-46-E3	N4	4.6		
SiP21106DR-475-E3	NJ	4.75		
SiP21107DR-12-E3	NQ	1.2		
SiP21107DR-18-E3	N5	1.8		
SiP21107DR-25-E3	NB	2.5		
SiP21107DR-26-E3	ND	2.6		
SiP21107DR-28-E3	N6	2.8		
SiP21107DR-285-E3	NF	2.85		
SiP21107DR-30-E3	NH	3		
SiP21107DR-33-E3	N7	3.3		
SiP21107DR-46-E3	N8	4.6		

Note:
Other fixed output voltage options are available. Please contact your Vishay sales representative or distributor for details.

TYPICAL CHARACTERISTICS

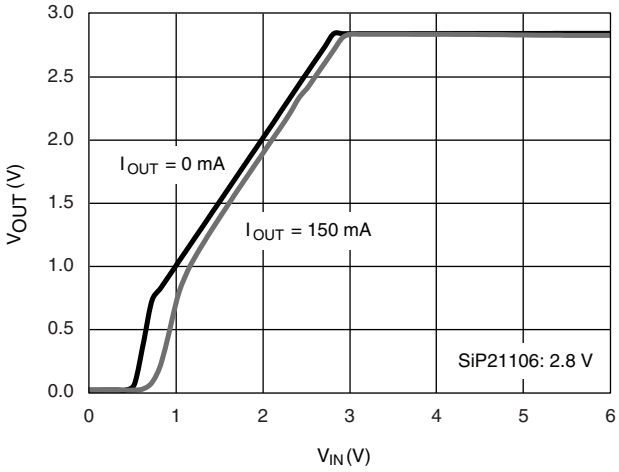

Output Voltage vs. Input Voltage

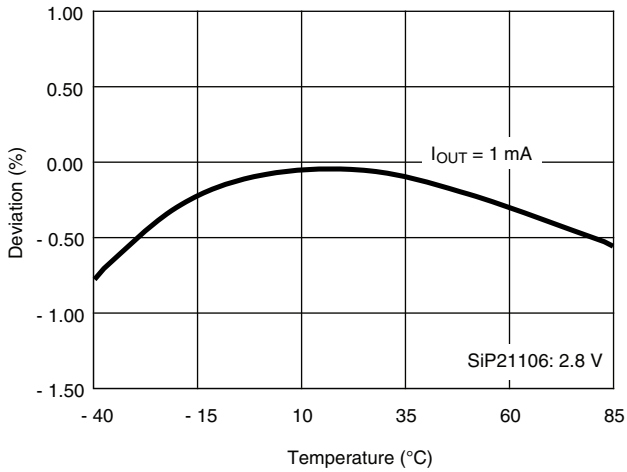

Output Voltage Accuracy vs. Temperature

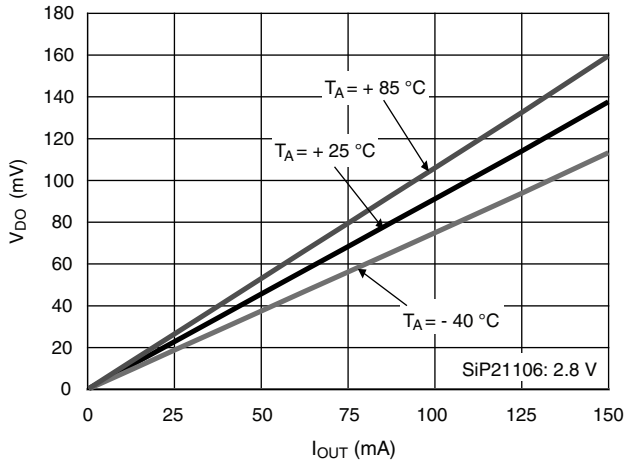

Dropout Voltage vs. Load Current

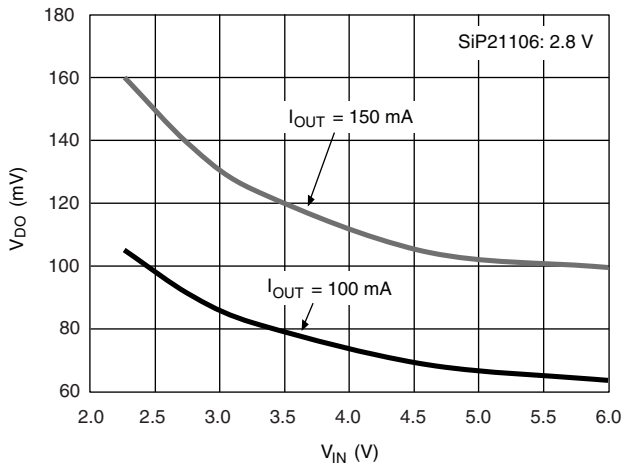

Dropout Voltage vs. Input Voltage

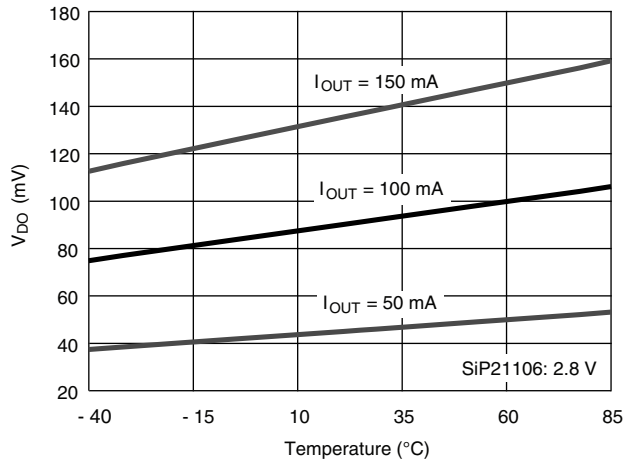

Dropout Voltage vs. Temperature

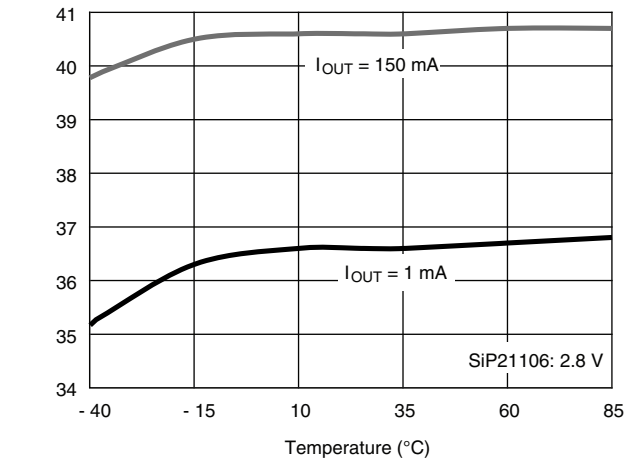

Ground Current vs. Temperature

TYPICAL CHARACTERISTICS

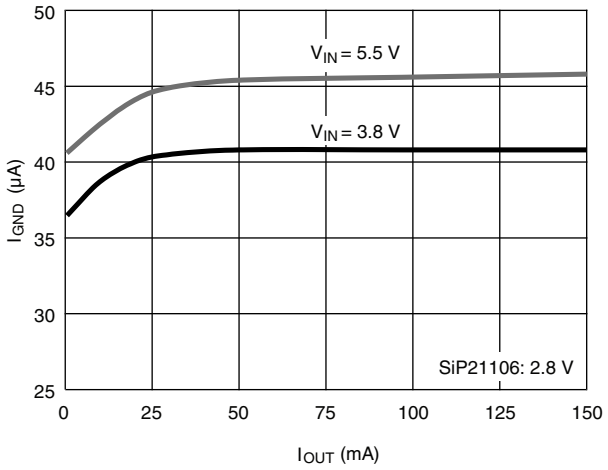

Ground Current vs. Output Current

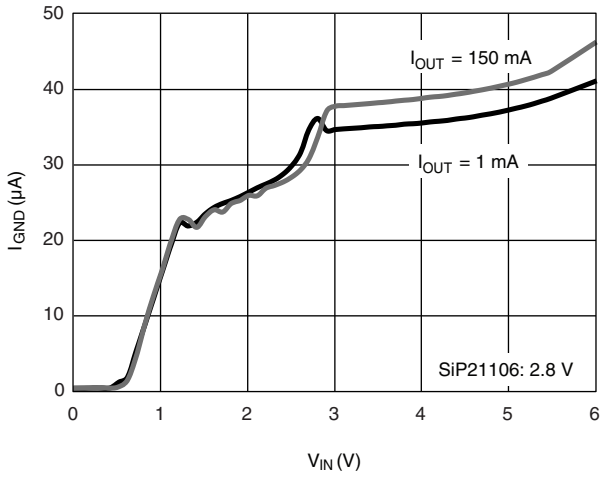

Ground Current vs. Input Voltage at 25 °C

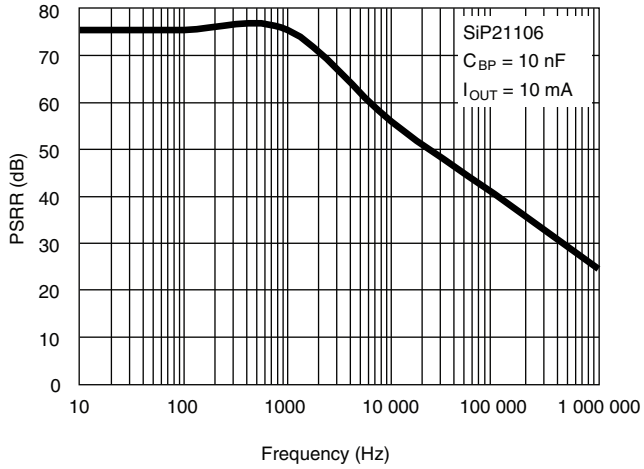

PSRR

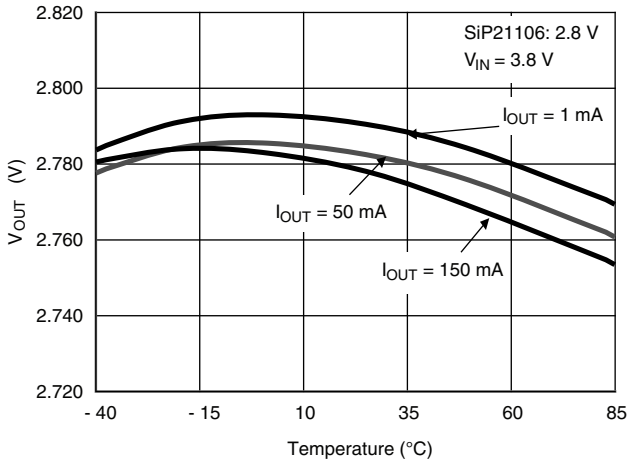

Output Voltage Accuracy vs. Load Current

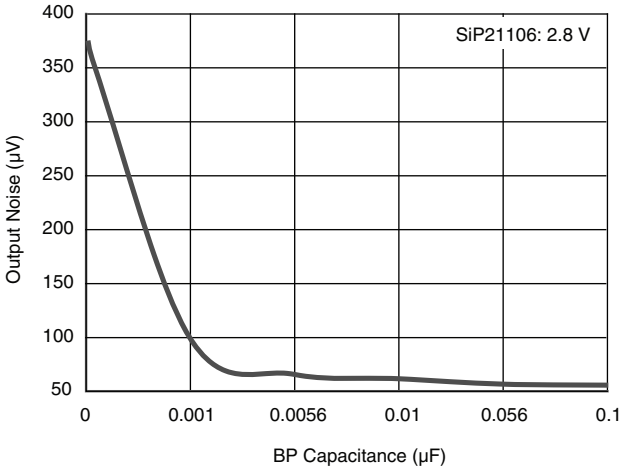

Output Noise vs. BP Capacitance

TYPICAL OPERATING WAVEFORMS

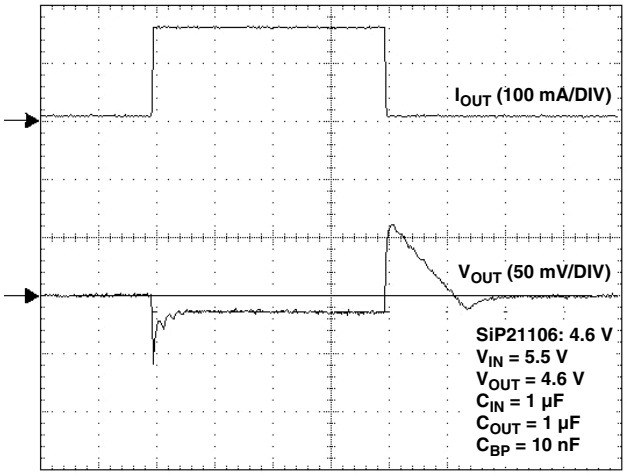

50 µs/DIV
Load Transient Response

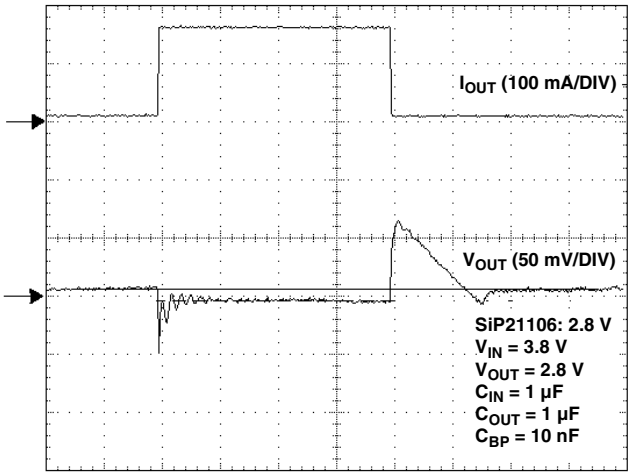

50 µs/DIV
Load Transient Response

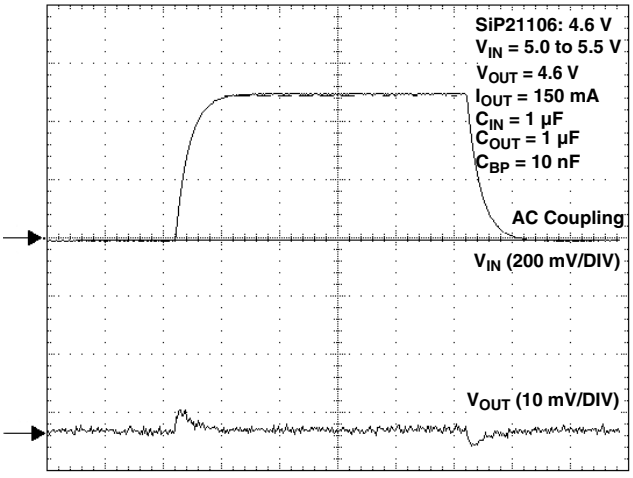

200 µs/DIV
Line Transient Response

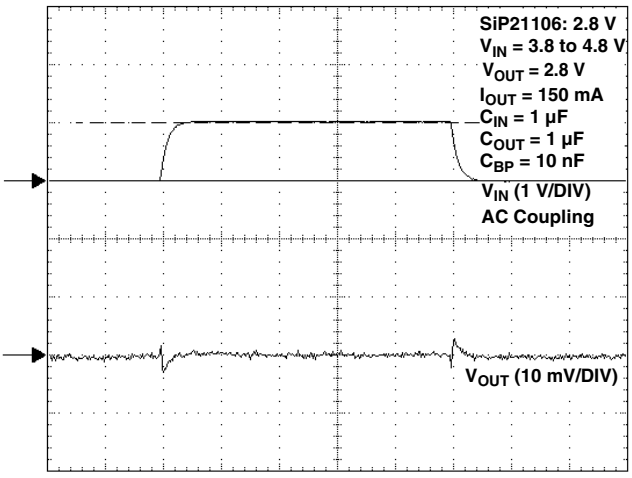

200 µs/DIV
Line Transient Response

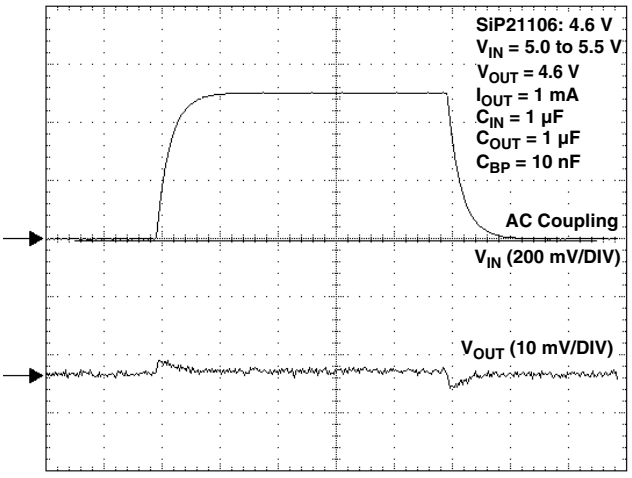

200 µs/DIV
Line Transient Response

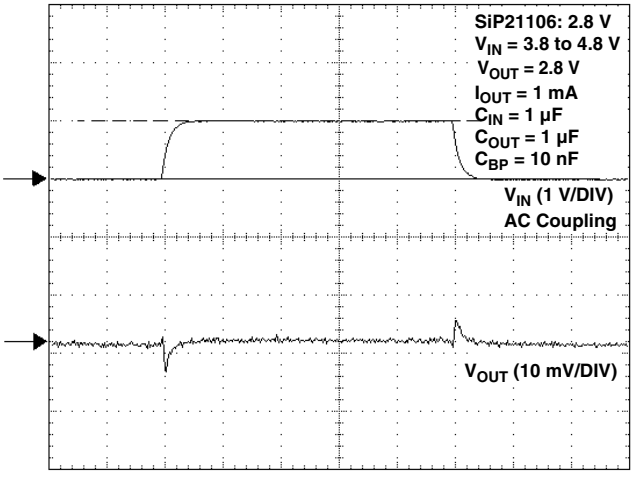

200 µs/DIV
Line Transient Response

TYPICAL OPERATING WAVEFORMS

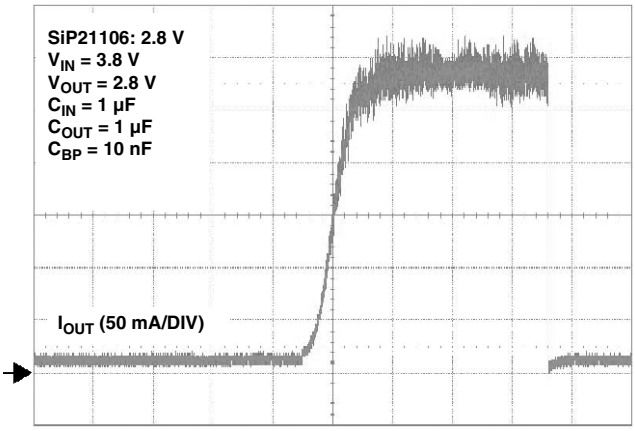

50 ms/DIV
Output Short Circuit Current

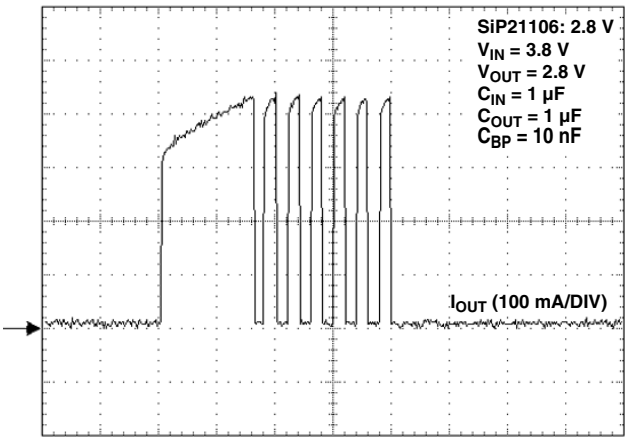

50 ms/DIV
Output Short Thermal Cycling

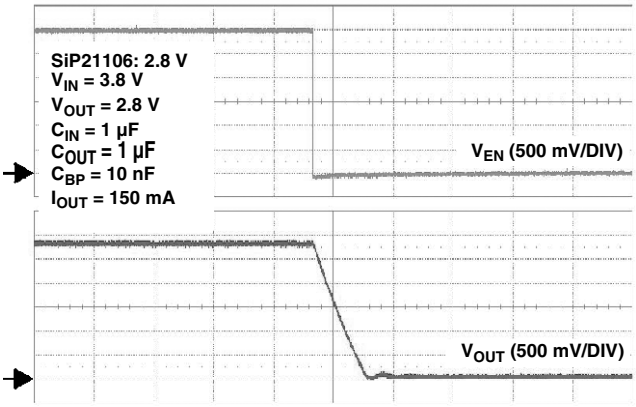

20 µs/DIV
Output Voltage Power-Down

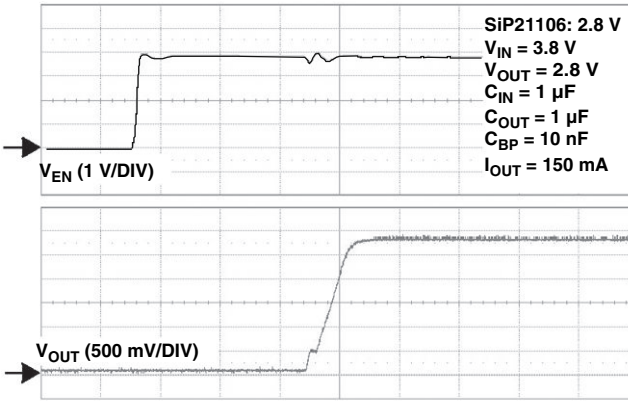

20 µs/DIV
Output Voltage Start-Up

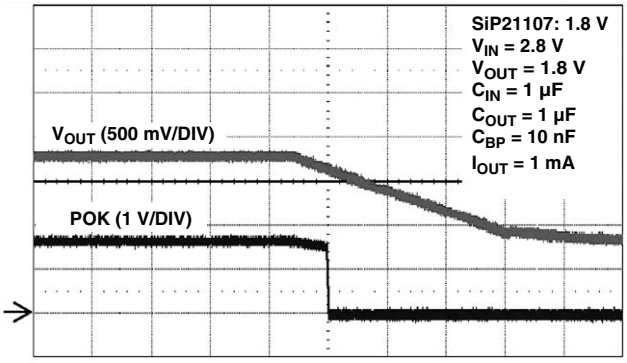

20 ms/DIV
POK pin goes low to indicate output under-voltage fault condition

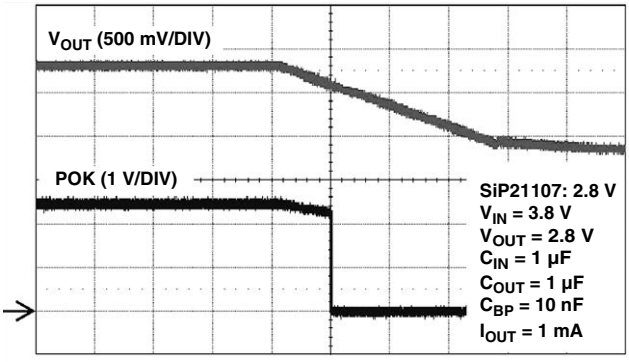

20 ms/DIV
POK pin goes low to indicate output under-voltage fault condition

TYPICAL OPERATING WAVEFORMS

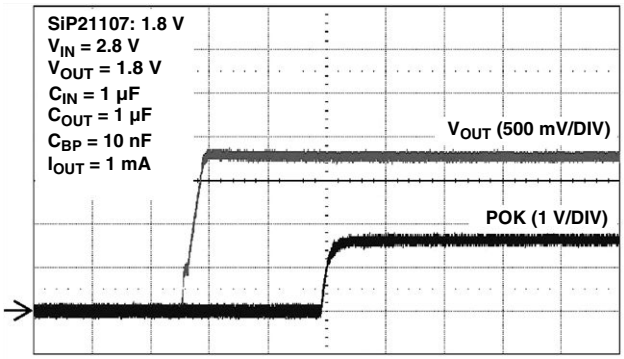

20 µs/DIV
POK pin is actively high to indicate an output normal operation condition on regular

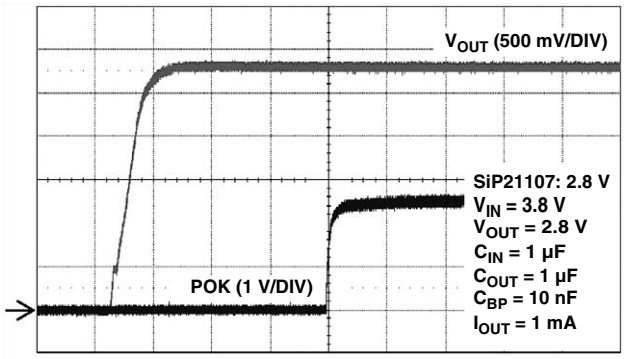

20 µs/DIV
POK pin is actively high to indicate an output normal operation condition on regular

TYPICAL WAVEFORMS

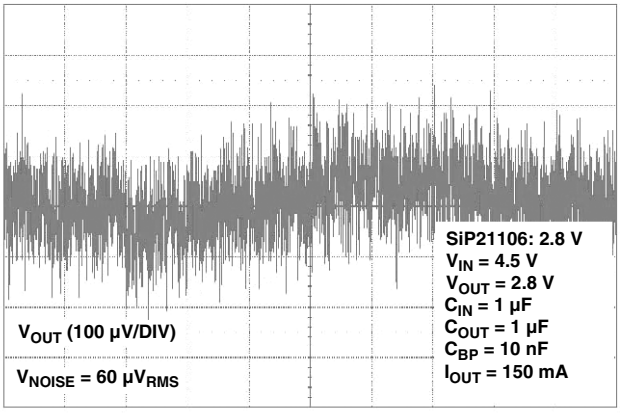

2 ms/DIV
Output Noise

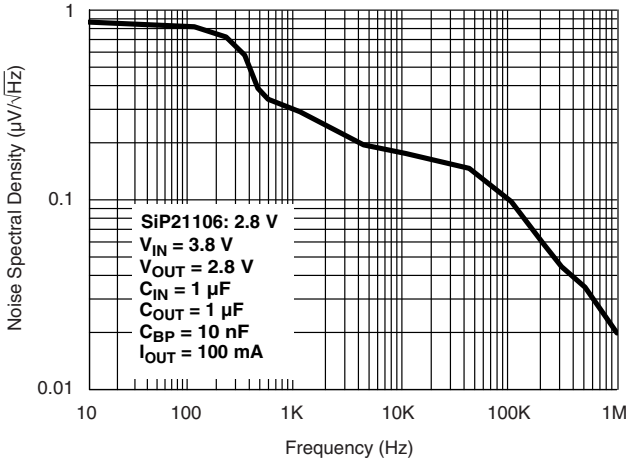

Output Noise Spectral Density

FUNCTIONAL BLOCK DIAGRAM

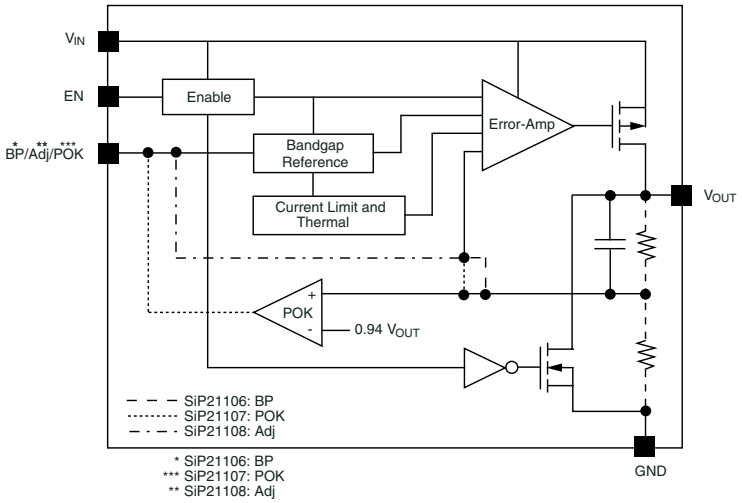

Figure 3.

DETAILED DESCRIPTION

As shown in the block diagram, the circuit consists of a bandgap reference, error amplifier, P-channel pass transistor and an internal feedback resistor voltage divider, which is used to monitor and control the output voltage.

A constant 1.2 V bandgap reference voltage is applied to the non-inverting input of the error amplifier. The error amplifier compares this reference with the feedback voltage on its inverting input and amplifies the difference. If the feedback voltage is lower than the reference voltage, the pass-transistor gate is pulled low. This increases the PMOS's gate to source voltage and allows more current to pass through the transistor to the output which increases the output voltage. Conversely, if the feedback voltage is higher than the reference voltage, the pass transistor gate is pulled high, decreasing the gate-to-source voltage, thereby allowing less current to pass to the output and causing it to drop.

Internal P-Channel Pass Transistor

A 0.9 Ω (typical) P-channel MOSFET is used as the pass transistor for the SiP21106, SiP21107, SiP21108 part series. The MOSFET transistor offers many advantages over the more, formerly, common PNP pass transistor designs, which ultimately result in longer battery lifetime. The main disadvantage of PNP pass transistors is that they require a certain base current to stay on, which significantly increases under heavy load conditions. In addition, during dropout, when the pass transistor saturates, the PNP regulators waste considerable current. In contrast, P-channel MOSFETS require virtually zero-base drive and do not suffer from the stated problems. These savings in base drive current translate to lower quiescent current which is typical around 35 µA as shown in the *Typical Characteristics.*

Shutdown and Auto-Dischage/No-Discharge

Bringing the EN voltage low will place the part in shutdown mode where the device output enters a high-impedance state and the quiescent current is reduced to below 1 µA, reducing the drain on the battery in standby mode and increasing standby time. Connect EN pin to input for normal operation. The output has an internal pull down to discharge the output to ground when the EN pin is low. The internal pull down is a 100 Ω typical resistor, which can discharge a 1 µF in less than 1 ms. Refer to *Typical Operating Waveforms* for turn-off waveforms.

Output Voltage Selection

The SiP21106 has fixed voltage outputs that are preset to voltages from 1.2 V to 4.6 V (see Ordering Information).

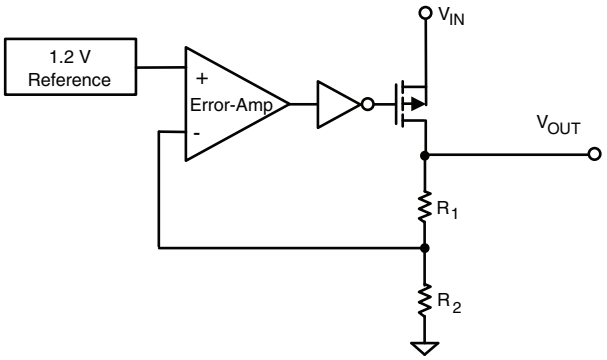

Figure 4.

The SiP21108 has a user-adjustable output that can be set through the resistor feedback network consisting of R_1 and R_2. R_2 range of 100K to 400K is recommended to be consistent with ground current specification. R_1 can then be determined by the following equation:

$$R_1 = R_2 \times \left(\frac{V_{OUT}}{V_{ref}} - 1\right)$$

Where V_{ref} is typically 1.2005 V. Use 1 % or better resistors for better output voltage accuracy (see Figure 4).

Current Limit

The SiP21106, SiP21107, SiP21108 include a current limit block which monitors the current passing through the pass transistor through a current mirror and controls the gate voltage of the MOSFET, limiting the output current to 330 mA (typical). This current limit feature allows for the output to be shorted to ground for an indefinite amount of time without damaging the device.

Thermal-Overload Protection

The thermal overload protection limits the total power dissipation and protects the device from being damaged. When the junction temperature exceeds T_J = 150 °C, the device turns the P-channel pass transistor off allowing the device to cool down. Once the temperature drops by about 20 °C, the thermal sensor turns the pass transistor on again and resumes normal operation. Consequently, a continuous thermal overload condition will result in a pulsed output. It is generally recommended to not exceed the junction temperature rating of 125 °C for continuous operation.

Noise Reduction in SiP21106

For the SiP21106, an external 10 nF bypass capacitor at BP pin is used to create a low pass filter for noise reduction. The startup time is fast, since a power-on circuit pre-charges the bypass capacitor. After the power-up sequence the pre-charge circuit is switched to standby mode in order to save current. It is therefore not recommended to use larger bypass capacitor values than 50 nF. When the circuit is used without a capacitor, stable operation is guaranteed.

POK Status in SiP21107

The POK comparator monitors the output until the supply comes up to specified percentage of V_{IN}. This open drain NMOS output requires an external pull-up resistor to either V_{OUT} or V_{IN}. The internal NMOS can drive up to 0.5 mA loads. POK pin is active high to indicate that output is within percentage tolerance. POK goes low when output is outside of this tolerance as when in dropout, over current and thermal shutdown.

APPLICATION INFORMATION

Input/Output Capacitor Selection and Regulator Stability

It is recommended that a low ESR 1 µF capacitor be used on the SiP21106, SiP21107, SiP21108 input. A larger input capacitance with lower ESR would improve noise rejection and line-transient response. A larger input bypass capacitor may be required in applications involving long inductive traces between the source and LDO. The circuit is stable with only a small output capacitor equal to 6 nF/mA (≈ 1 µF at 150 mA) of load. Since the bandwidth of the error amplifier is around 1 MHz - 3 MHz and the dominant pole is at the output node, the capacitor should be capacitive in this range, i.e., for 150 mA load current, an ESR < 0.4 Ω is necessary. Parasitic inductance of about 10 nH can be tolerated. Applying a larger output capacitor would increase power supply rejection and improve load-transient response. Some ceramic dielectrics such as the Z5U and Y5V exhibit large capacitance and ESR variation over temperature. If such capacitors are used, a 2.2 µF or larger value may be needed to ensure stability over the industrial temperature range. If using higher quality ceramic capacitors, such as those with X7R and Y7R dielectrics, a 1 µF capacitor will be sufficient at all operating temperatures.

Operating Region and Power Dissipation

An important consideration when designing power supplies is the maximum allowable power dissipation of a part. The maximum power dissipation in any application is dependant on the maximum junction temperature, $T_{J(max)}$ = 125 °C, the ambient temperature, T_A, and the junction-to-ambient thermal resistance for the package, which is the summation of θ_{J-C}, the thermal resistance of the package, and θ_{C-A}, the thermal resistance through the PC board and copper traces. Power dissipation may be expressed as:

$$P_{(max)} = \frac{T_{J(max)} - T_A}{\theta_{J-C} + \theta_{C-A}}$$

The GND pin of the SiP2110 acts as both the electrical connection to GND as well as a path for channeling away heat. Connect this pin to a GND plane to maximize heat dissipation. Once maximum power dissipation is calculated using the equation above, the maximum allowable output current for any input/output potential can be calculated as

$$I_{OUT(max)} = \frac{P_{(max)}}{V_{IN} - V_{OUT}}$$

PCB Layout

The component placement around the LDO should be done carefully to achieve good dynamic line and load response. The input and noise capacitor should be kept close to the LDO. The rise in junction temperature depends on how efficiently the heat is carried away from junction-to-ambient. The junction-to-lead thermal impedance is a characteristic of the package and is fixed. The thermal impedance between lead-to-ambient can be reduced by increasing the copper area on PCB. Increase the input, output and ground trace area to reduce the junction-to-ambient thermal impedance.

Vishay Siliconix maintains worldwide manufacturing capability. Products may be manufactured at one of several qualified locations. Reliability data for Silicon Technology and Package Reliability represent a composite of all qualified locations. For related documents such as package/tape drawings, part marking, and reliability data, see www.vishay.com/ppg?74442.

Thin SOT-23 : 5- and 6-Lead (Power IC only)

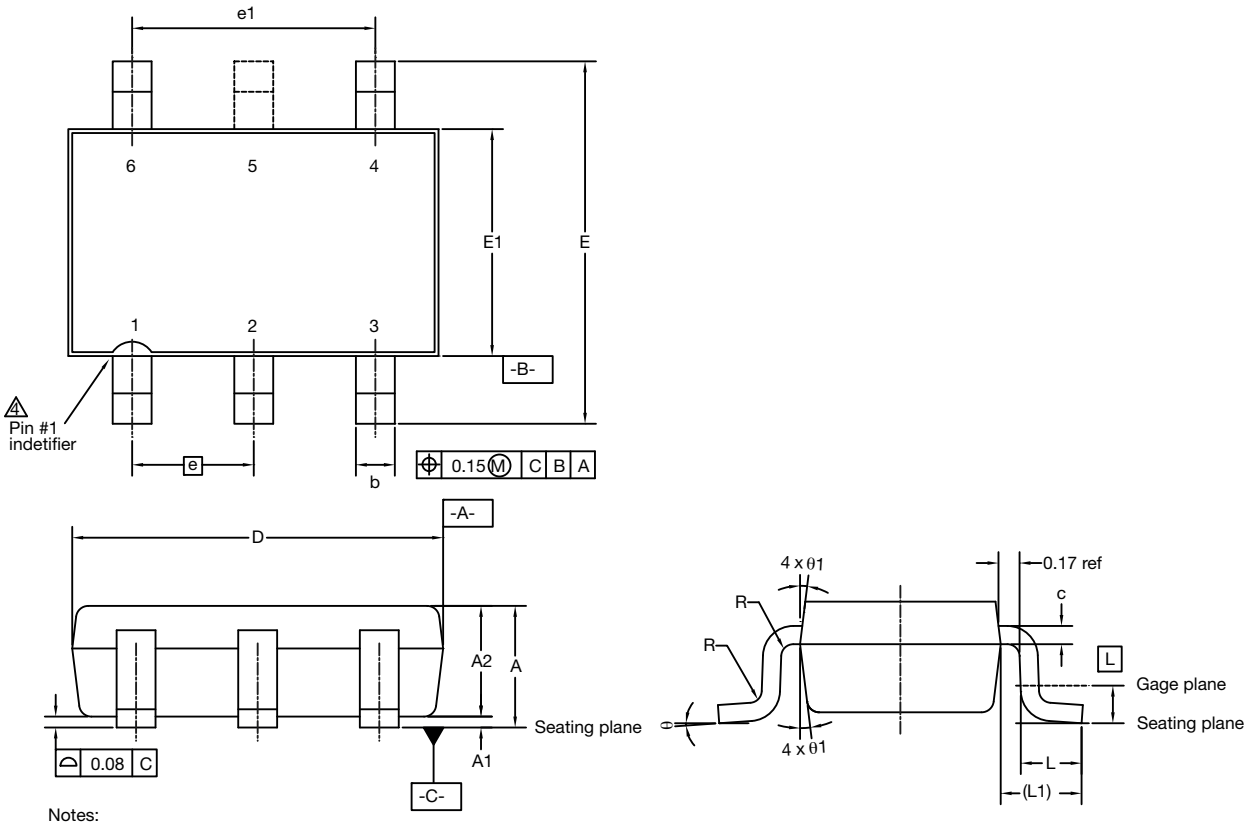

Notes:
1. Use millimeters as the primary measurement.
2. Dimensioning and tolerances conform to ASME Y14.5M. - 1994.
3. This part is fully compliant with JEDEC MO-193.
4. Detail of Pin #1 indentifier is optional.

DIM.	MILLIMETERS			INCHES		
	MIN.	NOM.	MAX.	MIN.	NOM.	MAX.
A	0.91	1.00	1.10	0.036	0.039	0.043
A1	0.00	0.05	0.10	0.000	0.002	0.004
A2	0.85	0.90	1.00	0.033	0.035	0.039
b	0.30	0.40	0.45	0.012	0.016	0.018
c	0.10	0.15	0.20	0.004	0.006	0.008
D	2.85	2.95	3.10	0.112	0.116	0.122
E	2.70	2.85	2.98	0.106	0.112	0.117
E1	1.525	1.65	1.70	0.060	0.065	0.067
e		0.95 BSC			0.0374 BSC	
L	0.30	0.40	0.50	0.014	-	0.020
L1		0.60 ref.			0.024 BSC	
L2		0.25 BSC			0.010 BSC	
θ	0°	4°	8°	0°	4°	8°
θ1	4°	10°	12°	4°	10°	12°
ECN: E13-1126-Rev. B, 01-Jul-13 DWG: 5926						

For technical questions, contact: powerictechsupport@vishay.com

THIS DOCUMENT IS SUBJECT TO CHANGE WITHOUT NOTICE. THE PRODUCTS DESCRIBED HEREIN AND THIS DOCUMENT ARE SUBJECT TO SPECIFIC DISCLAIMERS, SET FORTH AT www.vishay.com/doc?91000

SC-70: 3/4/5/6-LEADS (PIC ONLY)

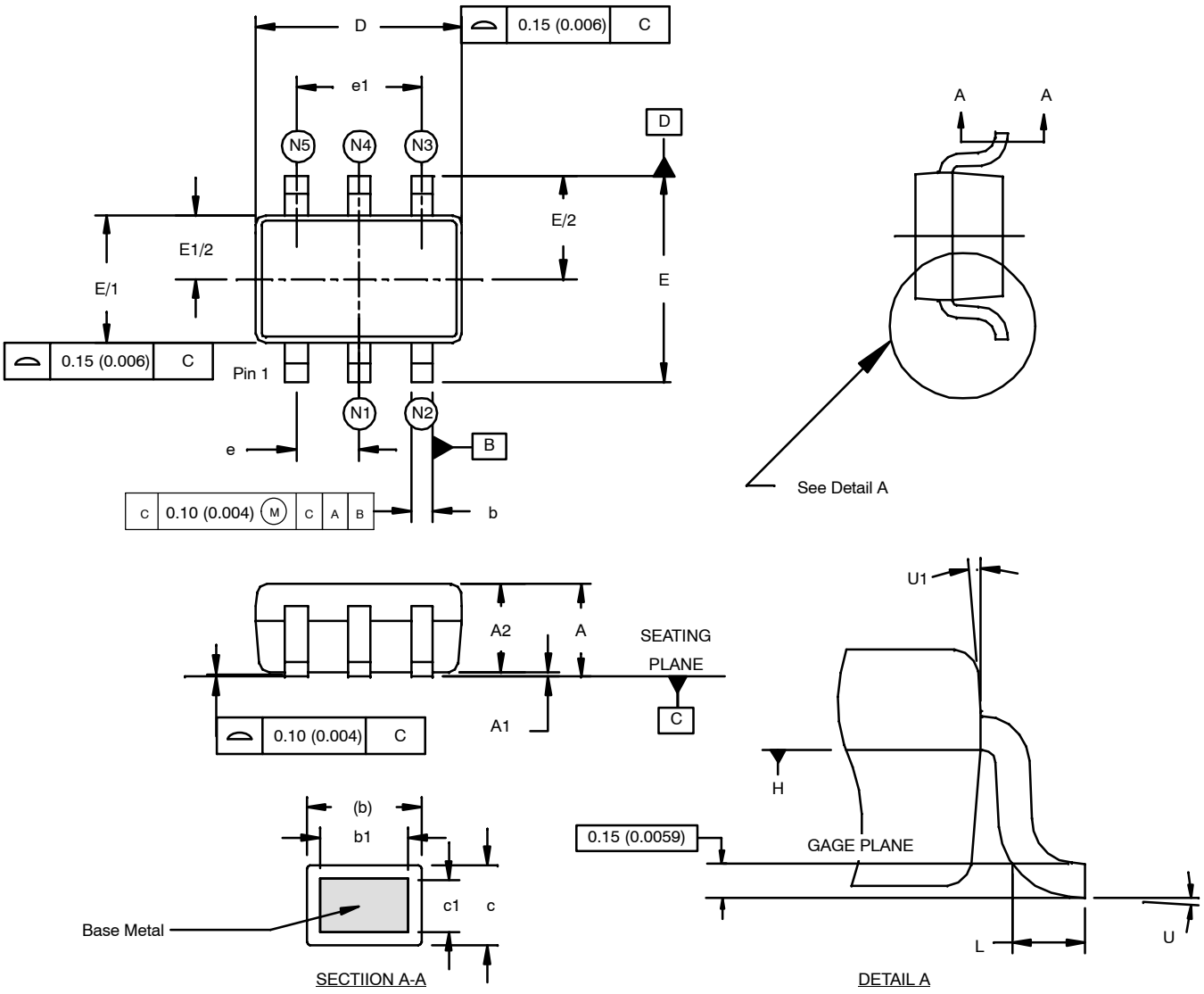

Pin Code	LEAD COUNT			
	3	4	5	6
N1	–	–	2	2
N2	2	2	3	3
N3	–	3	4	4
N4	3	–	–	5
N5	–	4	5	6

NOTES:

1. Dimensioning and tolerancing per ANSI Y14.5M-1994.
2. Controlling dimensions: millimeters converted to inch dimensions are not necessarily exact.
3. Dimension “D” does not include mold flash, protrusion or gate burr. Mold flash, protrusion or gate burr shall not exceed 0.15 mm (0.006 inch) per side.
4. The package top shall be smaller than the package bottom. Dimension “D” and “E1” are determined at the outer most extremes of the plastic body exclusive of mold flash, tie bar burrs, gate burrs and interlead flash, but including any mismatch between the top and bottom of the plastic body.

Dim	MILLIMETERS			INCHES		
	Min	Nom	Max	Min	Nom	Max
A	0.80	–	1.10	0.031	–	0.043
A1	0.00	–	0.10	0.000	–	0.004
A2	0.80	0.90	1.00	0.031	0.035	0.040
b	0.15	–	0.30	0.006	–	0.012
b1	0.15	0.20	0.25	0.006	0.008	0.010
c	0.08	–	0.25	0.003	–	0.010
c1	0.08	0.13	0.20	0.003	0.005	0.008
D	1.90	2.10	2.15	0.074	0.082	0.084
E	2.00	2.10	2.20	0.078	0.082	0.086
E_1	1.15	1.25	1.35	0.045	0.050	0.055
e	0.65 BSC			0.0255 BSC		
e_1	1.30 BSC			0.0512 BSC		
L	0.26	0.36	0.46	0.010	0.014	0.018
U	0°	–	8°	0°	–	8°
U1	4°		10°	4°		10°

ECN: S-42145—Rev. A, 22-Nov-04
DWG: 5941

PowerPAK® TSC75-6L (Power IC only)

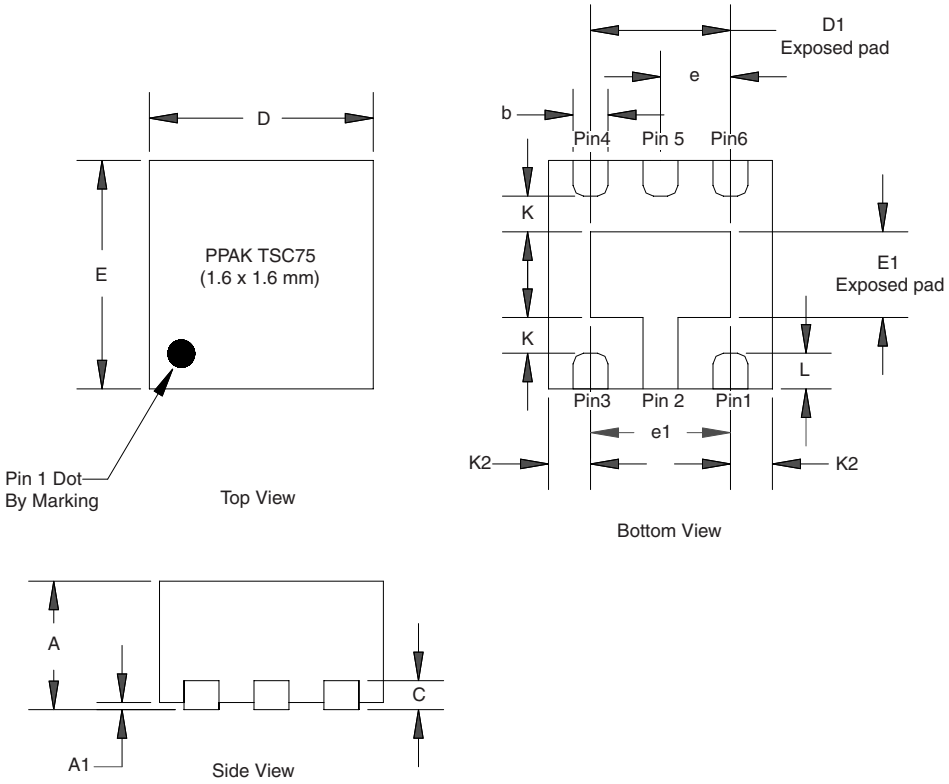

DIM	MILLIMETERS			INCHES		
	Min	Nom	Max	Min	Nom	Max
A	0.50	0.55	0.65	0.020	0.022	0.026
A1	0	-	0.05	0	-	0.002
b	0.20	0.25	0.30	0.008	0.010	0.012
C	0.10	0.15	0.20	0.006	0.008	0.010
D	1.55	1.60	1.65	0.0061	0.063	0.065
D1	0.95	1.00	1.05	0.037	0.039	0.041
E	1.55	1.60	1.65	0.061	0.063	0.065
E1	0.55	0.60	0.65	0.022	0.024	0.026
e	0.50 BSC			0.020 BSC		
e1	1.00 BSC			0.039 BSC		
K	0.15	-	-	0.006	-	-
K2	0.20	-	-	0.008		
L	0.20	0.25	0.30	0.008	0.010	0.012
ECN: S-61919-Rev. A, 02-Oct-06 DWG: 5955						

Disclaimer

ALL PRODUCT, PRODUCT SPECIFICATIONS AND DATA ARE SUBJECT TO CHANGE WITHOUT NOTICE TO IMPROVE RELIABILITY, FUNCTION OR DESIGN OR OTHERWISE.

Vishay Intertechnology, Inc., its affiliates, agents, and employees, and all persons acting on its or their behalf (collectively, “Vishay”), disclaim any and all liability for any errors, inaccuracies or incompleteness contained in any datasheet or in any other disclosure relating to any product.

Vishay makes no warranty, representation or guarantee regarding the suitability of the products for any particular purpose or the continuing production of any product. To the maximum extent permitted by applicable law, Vishay disclaims (i) any and all liability arising out of the application or use of any product, (ii) any and all liability, including without limitation special, consequential or incidental damages, and (iii) any and all implied warranties, including warranties of fitness for particular purpose, non-infringement and merchantability.

Statements regarding the suitability of products for certain types of applications are based on Vishay's knowledge of typical requirements that are often placed on Vishay products in generic applications. Such statements are not binding statements about the suitability of products for a particular application. It is the customer's responsibility to validate that a particular product with the properties described in the product specification is suitable for use in a particular application. Parameters provided in datasheets and / or specifications may vary in different applications and performance may vary over time. All operating parameters, including typical parameters, must be validated for each customer application by the customer's technical experts. Product specifications do not expand or otherwise modify Vishay's terms and conditions of purchase, including but not limited to the warranty expressed therein.

Hyperlinks included in this datasheet may direct users to third-party websites. These links are provided as a convenience and for informational purposes only. Inclusion of these hyperlinks does not constitute an endorsement or an approval by Vishay of any of the products, services or opinions of the corporation, organization or individual associated with the third-party website. Vishay disclaims any and all liability and bears no responsibility for the accuracy, legality or content of the third-party website or for that of subsequent links.

Except as expressly indicated in writing, Vishay products are not designed for use in medical, life-saving, or life-sustaining applications or for any other application in which the failure of the Vishay product could result in personal injury or death. Customers using or selling Vishay products not expressly indicated for use in such applications do so at their own risk. Please contact authorized Vishay personnel to obtain written terms and conditions regarding products designed for such applications.

No license, express or implied, by estoppel or otherwise, to any intellectual property rights is granted by this document or by any conduct of Vishay. Product names and markings noted herein may be trademarks of their respective owners.

© 2022 VISHAY INTERTECHNOLOGY, INC. ALL RIGHTS RESERVED