TMS320F28003x Real-Time Microcontrollers

1 Features

- TMS320C28x 32-bit DSP core at 120 MHz
  - IEEE 754 Floating-Point Unit (FPU)
    - Support for Fast Integer Division (FINTDIV)
  - Trigonometric Math Unit (TMU)
    - Support for Nonlinear Proportional Integral Derivative (NLPID) control
  - CRC Engine and Instructions (VCRC)
  - Ten hardware breakpoints (with ERAD)
- Programmable Control Law Accelerator (CLA)
  - 120 MHz
  - IEEE 754 single-precision floating-point instructions
  - Executes code independently of main CPU
- On-chip memory
  - 384KB (192KW) of flash (ECC-protected) across three independent banks
  - 69KB (34.5KW) of RAM (ECC-protected)
  - Dual-zone security
  - Secure Boot and JTAG Lock
- Clock and system control
  - Two internal 10-MHz oscillators
  - Crystal oscillator or external clock input
  - Windowed watchdog timer module
  - Missing clock detection circuitry
  - Dual-clock Comparator (DCC)
- 3.3-V I/O design
  - Internal VREG generation allows for single-supply design
  - Brownout reset (BOR) circuit
- System peripherals
  - 6-channel Direct Memory Access (DMA) controller
  - 55 individually programmable multiplexed General-Purpose Input/Output (GPIO) pins
  - 23 digital inputs on analog pins
  - 2 digital inputs/outputs on analog pins (AGPIO)
  - Enhanced Peripheral Interrupt Expansion (ePIE)
  - Multiple low-power mode (LPM) support
  - Embedded Real-time Analysis and Diagnostic (ERAD)
  - Unique Identification (UID) number
- Communications peripherals
  - One Power-Management Bus (PMBus) interface
  - Two Inter-integrated Circuit (I2C) interfaces
  - One Controller Area Network (CAN/DCAN) bus port
  - One Controller Area Network with Flexible Data-Rate (CAN FD/MCAN) bus port
  - Two Serial Peripheral Interface (SPI) ports
  - Two UART-compatible Serial Communication Interface (SCI)
  - Two UART-compatible Local Interconnect Network (LIN) interfaces
  - Fast Serial Interface (FSI) with one transmitter and one receiver (up to 200Mbps)
- Analog system
  - Three 4-MSPS, 12-bit Analog-to-Digital Converters (ADCs)
    - Up to 23 external channels (includes the two gpdac outputs)
    - Four integrated Post-Processing Blocks (PPB) per ADC
  - Four windowed comparators (CMPSS) with 12-bit reference Digital-to-Analog Converters (DACs)
    - Digital glitch filters
  - Two 12-bit buffered DAC outputs
- Enhanced control peripherals
  - 16 ePWM channels with eight channels that have high-resolution capability (150-ps resolution)
    - Integrated dead-band support
    - Integrated hardware trip zones (TZs)
  - Three Enhanced Capture (eCAP) modules
    - High-resolution Capture (HRCAP) available on one of the three eCAP modules
  - Two Enhanced Quadrature Encoder Pulse (eQEP) modules with support for CW/CCW operation modes
  - Eight Sigma-Delta Filter Module (SDFM) input channels (two parallel filters per channel)
    - Standard SDFM data filtering
    - Comparator filter for fast action for overvalue or undervalue condition
  - Embedded Pattern Generator (EPG)
- Configurable Logic Block (CLB)
  - 4 tiles
  - Augments existing peripheral capability
  - Supports position manager solutions
- Host Interface Controller (HIC)
  - Access to internal memory from an external host
- Background CRC (BGCRC)
  - One cycle CRC computation on 32 bits of data
- Advanced Encryption Standard (AES) accelerator

An IMPORTANT NOTICE at the end of this data sheet addresses availability, warranty, changes, use in safety-critical applications, intellectual property matters and other important disclaimers. PRODUCTION DATA.

- Live Firmware Update (LFU)
  - Fast context switching from old to new firmware
  - Flash bank erase time improvements
- Diagnostic features
  - Memory Power On Self Test (MPOST)
  - Hardware Built-in Self Test (HWBIST)
- Package options:
  - 100-pin Low-profile Quad Flatpack (LQFP) [PZ suffix]
  - 80-pin Low-profile Quad Flatpack (LQFP) [PN suffix]
  - 64-pin (LQFP) [PM suffix]
  - 48-pin (LQFP) [PT suffix]
- Temperature options:
  - Free-air (T_A): –40°C to 125°C
  - Junction (T_J): –40°C to 150°C

2 Applications

- Appliances
  - Air conditioner outdoor unit
- Building automation
  - Door operator drive control
- Industrial machine & machine tools
  - Automated sorting equipment
  - Textile machine
- AC inverter & VF drives
  - AC drive control module
  - AC drive position feedback
  - AC drive power stage module
- Linear motor transport systems
  - Linear motor power stage
- Single & multi axis servo drives
  - Servo drive position feedback
  - Servo drive power stage module
- Speed controlled BLDC drives
  - AC-input BLDC motor drive
  - DC-input BLDC motor drive
- Factory automation
  - Robot servo drive
  - Mobile robot motor control
  - Position sensor
- Industrial power
  - Industrial AC-DC
- UPS
  - Three phase UPS
  - Single phase online UPS
- Telecom & server power
  - Merchant DC/DC
  - Merchant network & server PSU
  - Merchant telecom rectifiers
- Hybrids, electric & powertrain systems
  - DC/DC converter
  - Inverter & motor control
  - On-board (OBC) & wireless charger
  - Virtual engine sound system (VESS)
  - Engine fan
  - eTurbo/charger
  - Pump
  - Electric power steering (EPS)
- Infotainment and cluster
  - Head-up display
  - Automotive head unit
  - Automotive external amplifier
- Body electronics & lighting
  - Automotive HVAC compressor module
  - DC/AC inverter
  - Headlight
- ADAS
  - Mechanically scanning LIDAR
- EV charging infrastructure
  - AC charging (pile) station
  - DC charging (pile) station
  - EV charging station power module
  - Wireless EV charging station
- Renewable energy storage
  - Energy storage power conversion system (PCS)
- Solar energy
  - Central inverter
  - Micro inverter
  - Solar power optimizer
  - Solar arc protection
  - Rapid shutdown
  - String inverter

3 Description

The TMS320F28003x (F28003x) is a member of the C2000™ real-time microcontroller family of scalable, ultra-low latency devices designed for efficiency in power electronics, including but not limited to: high power density, high switching frequencies, and supporting the use of GaN and SiC technologies.

Copyright © 2022 Texas Instruments Incorporated

These include such applications as:

- Motor drives
- Appliances
- Hybrid, electric & powertrain systems
- Solar & EV charging
- Digital power
- Body electronics & lighting
- Test & measurement

The real-time control subsystem is based on TI's 32-bit C28x DSP core, which provides 120 MHz of signal-processing performance for floating- or fixed-point code running from either on-chip flash or SRAM. The C28x CPU is further boosted by the Floating-Point Unit (FPU), Trigonometric Math Unit (TMU), and VCRC (Cyclical Redundancy Check) extended instruction sets, speeding up common algorithms key to real-time control systems.

The CLA allows significant offloading of common tasks from the main C28x CPU. The CLA is an independent 32-bit floating-point math accelerator that executes in parallel with the CPU. Additionally, the CLA has its own dedicated memory resources and it can directly access the key peripherals that are required in a typical control system. Support of a subset of ANSI C is standard, as are key features like hardware breakpoints and hardware task-switching.

The F28003x supports up to 384KB (192KW) of flash memory divided into three 128KB (64KW) banks, which enable programming and execution in parallel. Up to 69KB (34.5KW) of on-chip SRAM is also available to supplement the flash memory.

The Live Firmware Update hardware enhancements on F28003x allow fast context switching from the old firmware to the new firmware to minimize application downtime when updating the device firmware.

High-performance analog blocks are integrated on the F28003x real-time microcontroller (MCU) and are closely coupled with the processing and PWM units to provide optimal real-time signal chain performance. Sixteen PWM channels, all supporting frequency-independent resolution modes, enable control of various power stages from a 3-phase inverter to power factor correction and advanced multi-level power topologies.

The inclusion of the Configurable Logic Block (CLB) allows the user to add custom logic and potentially integrate FPGA-like functions into the C2000 real-time MCU.

Interfacing is supported through various industry-standard communication ports (such as SPI, SCI, I2C, PMBus, LIN, CAN and CAN FD) and offers multiple pin-muxing options for optimal signal placement. The Fast Serial Interface (FSI) enables up to 200 Mbps of robust communications across an isolation boundary.

New to the C2000 platform is the Host Interface Controller (HIC), a high-throughput interface that allows an external host to access the resources of the TMS320F28003x directly.

Want to learn more about features that make C2000 Real-Time MCUs the right choice for your real-time control system? Check out *The Essential Guide for Developing With C2000™ Real-Time Microcontrollers* and visit the C2000™ real-time control MCUs page.

The *Getting Started With C2000™ Real-Time Control Microcontrollers (MCUs) Getting Started Guide* covers all aspects of development with C2000 devices from hardware to support resources. In addition to key reference documents, each section provides relevant links and resources to further expand on the information covered.

Ready to get started? Check out the TMDSCNCD280039C evaluation board and download C2000Ware.

Copyright © 2022 Texas Instruments Incorporated

Device Information

PART NUMBER(1)	CONTROL LAW ACCELERATOR (CLA)	CONFIGURABLE LOGIC BLOCK (CLB)	FLASH SIZE
TMS320F280039C-Q1, TMS320F280039C	Yes	4 Tiles	384KB
TMS320F280039-Q1, TMS320F280039	Yes	–	
TMS320F280038C-Q1	Yes	4 Tiles	
TMS320F280038-Q1	Yes	–	
TMS320F280037C-Q1, TMS320F280037C	Yes	4 Tiles	256KB
TMS320F280037-Q1, TMS320F280037	Yes	–	
TMS320F280036C-Q1	Yes	4 Tiles	
TMS320F280036-Q1	Yes	–	
TMS320F280034-Q1, TMS320F280034	Yes	–	128KB
TMS320F280033	No	–	128KB

(1) For more information on these devices, see the Device Comparison table.

Copyright © 2022 Texas Instruments Incorporated

3.1 Functional Block Diagram

The Functional Block Diagram shows the CPU system and associated peripherals.

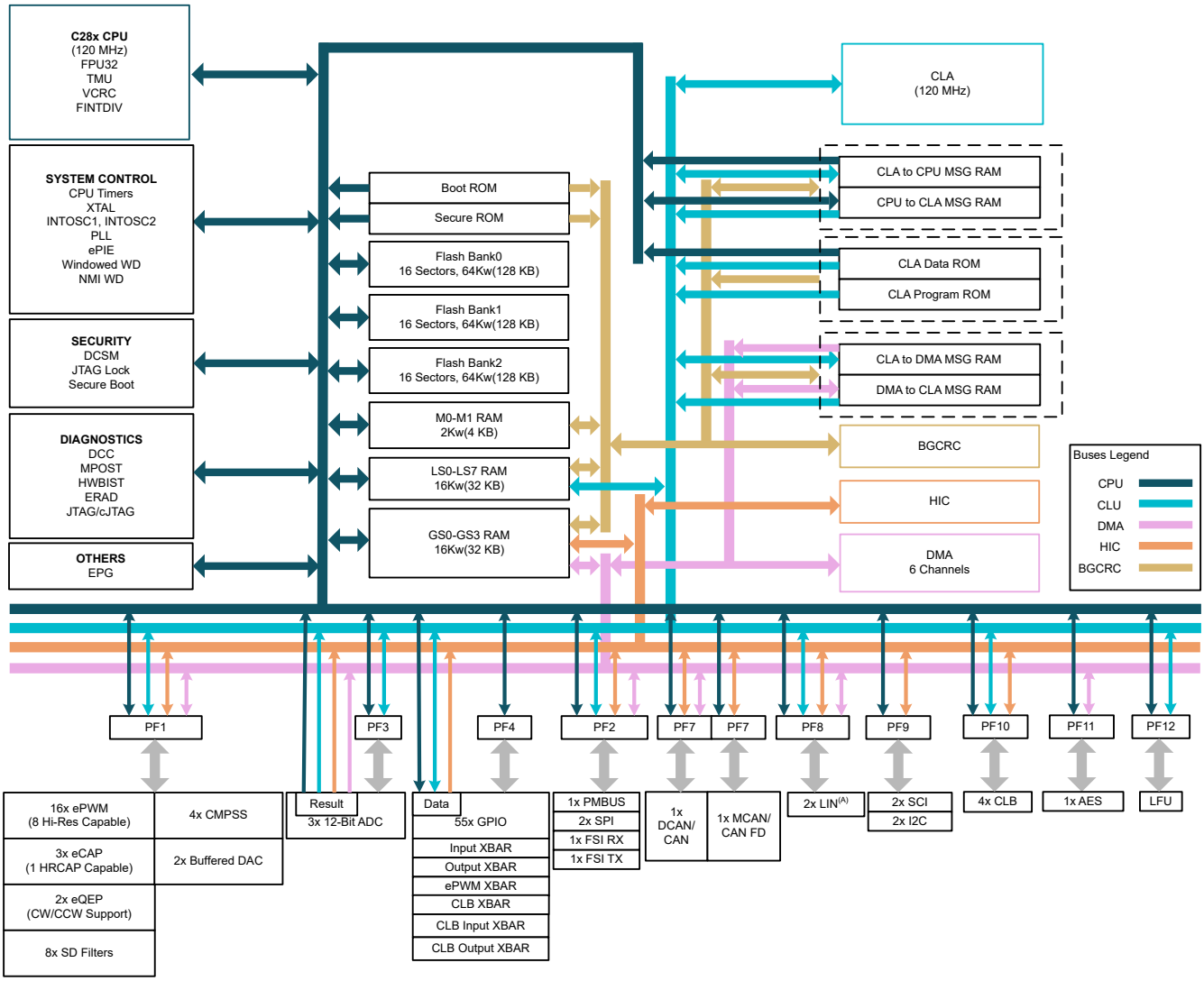

A. The LIN module can also work as an SCI.

Figure 3-1. Functional Block Diagram

Table of Contents

1 Features....1
2 Applications....2
3 Description....2
3.1 Functional Block Diagram....5
Revision History....7
4 Device Comparison....8
4.1 Related Products....10
5 Pin Configuration and Functions....11
5.1 Pin Diagrams....11
5.2 Pin Attributes....16
5.3 Signal Descriptions....38
5.4 Pin Multiplexing....51
5.5 Pins With Internal Pullup and Pulldown....59
5.6 Connections for Unused Pins....60
6 Specifications....62
6.1 Absolute Maximum Ratings....62
6.2 ESD Ratings – Commercial....62
6.3 ESD Ratings – Automotive....63
6.4 Recommended Operating Conditions....63
6.5 Power Consumption Summary....64
6.6 Electrical Characteristics....70
6.7 Thermal Resistance Characteristics for PZ Package....71
6.8 Thermal Resistance Characteristics for PN Package....72
6.9 Thermal Resistance Characteristics for PM Package....73
6.10 Thermal Resistance Characteristics for PT Package....74
6.11 Thermal Design Considerations....74
6.12 System....75
6.13 Analog Peripherals....116
6.14 Control Peripherals....146
6.15 Communications Peripherals....161
7 Detailed Description....196
7.1 Overview....196
7.2 Functional Block Diagram....197
7.3 Memory....198
7.4 Identification....206
7.5 Bus Architecture – Peripheral Connectivity....207
7.6 C28x Processor....208
7.7 Control Law Accelerator (CLA)....210
7.8 Embedded Real-Time Analysis and Diagnostic (ERAD)....212
7.9 Background CRC-32 (BGCRC)....212
7.10 Direct Memory Access (DMA)....213
7.11 Device Boot Modes....214
7.12 Dual Code Security Module....222
7.13 Watchdog....223
7.14 C28x Timers....224
7.15 Dual-Clock Comparator (DCC)....224
7.16 Configurable Logic Block (CLB)....226
8 Applications, Implementation, and Layout....228
8.1 TI Reference Design....228
9 Device and Documentation Support....229
9.1 Getting Started and Next Steps....229
9.2 Device Nomenclature....229
9.3 Markings....230
9.4 Tools and Software....232
9.5 Documentation Support....234
9.6 Support Resources....235
9.7 Trademarks....236
9.8 Electrostatic Discharge Caution....236
9.9 Glossary....236
10 Mechanical, Packaging, and Orderable Information....237

Copyright © 2022 Texas Instruments Incorporated

Revision History

Changes from October 20, 2021 to March 4, 2022 (from Revision * (October 2021) to Revision A (March 2022)) **Page**

- **Global:** Changed document status from "Advance Information" to "Production Data"... 1
- Section 3 (Description): Updated section... 2
- Figure 3-1 (Functional Block Diagram): Updated figure... 5
- Table 5-2 (Analog Signals): Change 100 PZ PIN number of AIO252 from 48 to 32. Change 100 PZ PIN number of GPIO21 from 30 to 49... 38
- Section 5.3 (Signal Descriptions): Removed Digital Signals by GPIO section... 38
- Table 5-4 (Power and Ground): Updated title of PMM section... 49
- Section 6.6 (Electrical Characteristics): Updated table... 62
- Section 6.5.1 (System Current Consumption): Updated table... 64
- Section 6.5.2 (System Current Consumption (VREG Disable - External Supply)): Updated table... 64
- Section 6.10 (Thermal Resistance Characteristics for PT Package): Updated $R\Theta_{JC}$; $R\Theta_{JB}$; $R\Theta_{JA}$ for 0 lfm; Psi_{JT} for 0 lfm; and Psi_{JB} for 0 lfm... 74
- Section 6.12.1 (Power Management Module (PMM)): Updated section... 75
- Figure 6-1 (PMM Block Diagram): Updated figure... 75
- Section 6.12.1.2.1 (Power Rail Monitors): Updated Note... 75
- Section 6.12.1.4.3.1 (External VREG/VDD Mode Sequence): Updated section... 78
- Figure 6-3 (External VREG Power Up Sequence): Updated figure... 78
- Section 6.12.1.4.3.2 (Internal VREG/VDD Mode Sequence): Updated section... 79
- Figure 6-4 (Internal VREG Power Up Sequence): Updated figure... 79
- Section 6.12.1.4.3.4 (Supply Slew Rate): Added section... 81
- Section 6.12.1.5.1 (Power Management Module Operating Conditions): Updated table... 82
- Section 6.12.1.5.2 (Power Management Module Characteristics): Updated table... 82
- Supply Voltages: Added section... 82
- Figure 6-9 (Clocking System): Updated figure... 87
- Section 6.12.3.2.1.1 (Input Clock Frequency): Updated table... 90
- Section 6.12.3.2.1.2 (XTAL Oscillator Characteristics): Updated table... 90
- Section 6.12.3.2.1.3 (X1 Input Level Characteristics When Using an External Clock Source (Not a Crystal)): Updated table... 90
- Section 6.12.3.4 (XTAL Oscillator): Updated section... 92
- Section 6.12.3.5.1 (INTOSC Characteristics): Updated table... 99
- Section 6.13.5.3.1 (Comparator Electrical Characteristics): Updated table... 139
- Figure 7-1 (Functional Block Diagram): Updated figure... 197
- Section 7.3.3.1 (Addresses of Flash Sectors): Updated table by removing "DCSM" from "User configurable OTP Bank 1" and "User configurable OTP Bank 2"... 200
- Section 7.3.4 (Peripheral Registers Memory Map): Updated Peripheral Registers Memory Map (C28) table. ... 202
- Section 7.4 (Identification): Updated section... 206
- Section 9.1 (Getting Started and Next Steps): Updated section... 229
- Figure 9-2 (Package Symbolization for PZ Package): Updated figure... 230
- Figure 9-3 (Package Symbolization for PN Package): Updated figure... 230
- Figure 9-4 (Package Symbolization for PM Package): Updated figure... 230
- Figure 9-5 (Package Symbolization for PT Package): Updated figure... 230
- Table 9-1 (Revision Identification): Updated COMMENTS... 230
- Section 9.4 (Tools and Software): Moved "TI Resource Explorer" from Development Tools section to Software Tools section. Updated description of XDS200 USB Debug Probe. Updated Models section... 232
- Section 9.5 (Documentation Support): Updated Applications Reports section... 234

Copyright © 2022 Texas Instruments Incorporated

4 Device Comparison

Table 4-1 lists the features of the TMS320F28003x devices.

Table 4-1. Device Comparison

FEATURE[1]		F280039C F280039C-Q1 F280039 F280039-Q1	F280038C-Q1 F280038-Q1	F280037C F280037C-Q1 F280037 F280037-Q1	F280036C-Q1 F280036-Q1	F280034 F280034-Q1	F280033
Processor and Accelerators							
C28x	Frequency (MHz)	120					
	FPU	Yes (instructions for Fast Integer Division)					
	VCRC	Yes					
	TMU	Yes – Type 1 (instructions supporting NLPID)					
CLA – Type 2	Available	Yes					No
	Frequency (MHz)	120					–
6-Channel DMA – Type 0		Yes					
External interrupts		5					
Memory							
Flash		384KB (192KW)		256KB (128KW)		128KB (64KW)	
Flash Banks		3 x 128KB		2 x 128KB		2 x 64KB	
RAM	Dedicated	4KB (2KW)					
	Local Shared	32KB (16KW)					
	Message	1KB (0.5KW)					
	Global Shared	32KB (16KW)					
	Total	69KB (34.5KW)					
Message RAM Types		512B (256W) CPU-CLA 512B (256W) CLA-DMA					–
ECC		FLASH, Mx, LSx, GSx, Message RAM					FLASH, Mx, LSx, GSx
Parity		ROM, CAN RAM					
Code security for on-chip flash and RAM		Yes					
System							
Configurable Logic Block (CLB)		4 Tiles on C Variants				–	
Embedded Pattern Generator (EPG)		Yes					
32-bit CPU timers		3					
Advance Encryption Standard (AES)		Yes					
Background CRC (BGCRC)		Yes					
Live Firmware Update (LFU) Support		Yes, with enhancements and flash bank erase time improvements					
Secure Boot		Yes					
JTAG Lock		Yes					
HWBIST		Yes					
Nonmaskable Interrupt Watchdog (NMIWD) timers		1					
Watchdog timers		1					
Crystal oscillator/External clock input		1					
Internal oscillator		2					

Copyright © 2022 Texas Instruments Incorporated

Table 4-1. Device Comparison (continued)

FEATURE[1]		F280039C F280039C-Q1 F280039 F280039-Q1	F280038C-Q1 F280038-Q1	F280037C F280037C-Q1 F280037 F280037-Q1	F280036C-Q1 F280036-Q1	F280034 F280034-Q1	F280033
Pins and Power Supply							
Internal 3.3-V to 1.2-V Voltage Regulator	VREG LDO	Yes					
GPIO pins	100-pin PZ	51	–	51	–	51	
	80-pin PN	39	–	39	–	39	
	64-pin PM	26	25	26	25	26	
	48-pin PT	–	–	14	–	14	
	Additional GPIO	4 (2 from cJTAG and 2 from X1/X2)					
AIO (analog with digital inputs)	100-pin PZ	23	–	23	–	23	
	80-pin PN	16	–	16	–	16	
	64-pin PM	16	16	16	16	16	
	48-pin PT	–	–	14	–	14	
AGPIO (analog with digital inputs and outputs)	100-pin PZ	2	–	2	–	2	
	80-pin PN	2	–	2	–	2	
Analog Peripherals							
ADC 12-bit	Number of ADCs	3					
	MSPS	4					
	Conversion Time (ns)[2]	250					
ADC channels (single-ended) (*includes the two gpdac outputs*)	100-pin PZ	23	–	23	–	23	
	80-pin PN	18	–	18	–	18	
	64-pin PM	16	16	16	16	16	
	48-pin PT	–	–	14	–	14	
Temperature sensor		1					
Buffered DAC		2					
CMPSS (each CMPSS has two comparators and two internal DACs)		4					
Control Peripherals [3]							
eCAP/HRCAP modules – Type 2		3 (1 - eCAP3 with HRCAP capability)					
ePWM/HRPWM channels – Type 4		16 (8 - ePWM1 to ePWM4 with HRPWM capability)					
eQEP modules – Type 2		2					
SDFM channels – Type 2		8					

Copyright © 2022 Texas Instruments Incorporated

Table 4-1. Device Comparison (continued)

FEATURE(1)		F280039C F280039C-Q1 F280039 F280039-Q1	F280038C-Q1 F280038-Q1	F280037C F280037C-Q1 F280037 F280037-Q1	F280036C-Q1 F280036-Q1	F280034 F280034-Q1	F280033
Communication Peripherals (3)							
CAN (DCAN) – Type 0		1					
CAN FD (MCAN) – Type 1		1					
Fast Serial Interface (FSI) – Type 2		1 (1 RX and 1 TX)					
I2C – Type 1		2					
LIN – Type 1 (UART-Compatible)		2					
Host Interface Controller (HIC) – Type 1		1					
PMBus – Type 0		1					
SCI – Type 0 (UART-Compatible)		2					
SPI – Type 2		2					
Package Options, Temperature, and Qualification							
Junction temperature (T_J)		–40°C to 150°C					
Free-Air temperature (T_A)		–40°C to 125°C					
Package Options	100-pin PZ	F280039C F280039	–	F280037C F280037	–	F280034	F280033
	80-pin PN	F280039C F280039	–	F280037C F280037	–	F280034	F280033
	64-pin PM	F280039C F280039	–	F280037C F280037	–	F280034	F280033
	48-pin PT	–	–	F280037C F280037	–	F280034	F280033
Package Options with AEC-Q100 Qualification available	100-pin PZ	F280039C-Q1 F280039-Q1	–	F280037C-Q1 F280037-Q1	–	–	–
	64-pin PM	–	F280038C-Q1 F280038-Q1	–	F280036C-Q1 F280036-Q1	–	–
	48-pin PT	–	–	F280037C-Q1 F280037-Q1	–	F280034-Q1	–

(1) A type change represents a major functional feature difference in a peripheral module. Within a peripheral type, there may be minor differences between devices that do not affect the basic functionality of the module.
(2) Time between start of sample-and-hold window to start of sample-and-hold window of the next conversion.
(3) For devices that are available in more than one package, the peripheral count listed in the smaller package is reduced because the smaller package has less device pins available. The number of peripherals internally present on the device is not reduced compared to the largest package offered within a part number. See Section 5 to identify which peripheral instances are accessible on pins in the smaller package.

4.1 Related Products

TMS320F2803x Real-Time Microcontrollers
The F2803x series increases the pin-count and memory size options. The F2803x series also introduces the parallel control law accelerator (CLA) option.

TMS320F2807x Real-Time Microcontrollers
The F2807x series offers the most performance, largest pin counts, flash memory sizes, and peripheral options. The F2807x series includes the latest generation of accelerators, ePWM peripherals, and analog technology.

TMS320F28004x Real-Time Microcontrollers
The F28004x series is a reduced version of the F2807x series with the latest generational enhancements.

TMS320F28002x Real-Time Microcontrollers
The F28002x series is a reduced version of the F28004x series with the latest generational enhancements.

TMS320F2838x Real-Time Microcontrollers
The F2838x series offers more performance, larger pin counts, flash memory sizes, peripheral and wide variety of connectivity options. The F2838x series includes the latest generation of accelerators, ePWM peripherals, and analog technology.

Copyright © 2022 Texas Instruments Incorporated

5 Pin Configuration and Functions

5.1 Pin Diagrams

Figure 5-1 shows the pin assignments on the 100-pin PZ low-profile quad flatpack; the Q and non-Q variant have the same pinout. Figure 5-2 shows the pin assignments on the 80-pin PN low-profile quad flatpack. Figure 5-3 shows the pin assignments on the 64-pin PM low-profile quad flatpack (Q temperature). Figure 5-4 shows the pin assignments on the 64-pin PM low-profile quad flatpack. Figure 5-5 shows the pin assignments on the 48-Pin PT low-profile quad flatpack; the Q and non-Q variant have the same pinout.

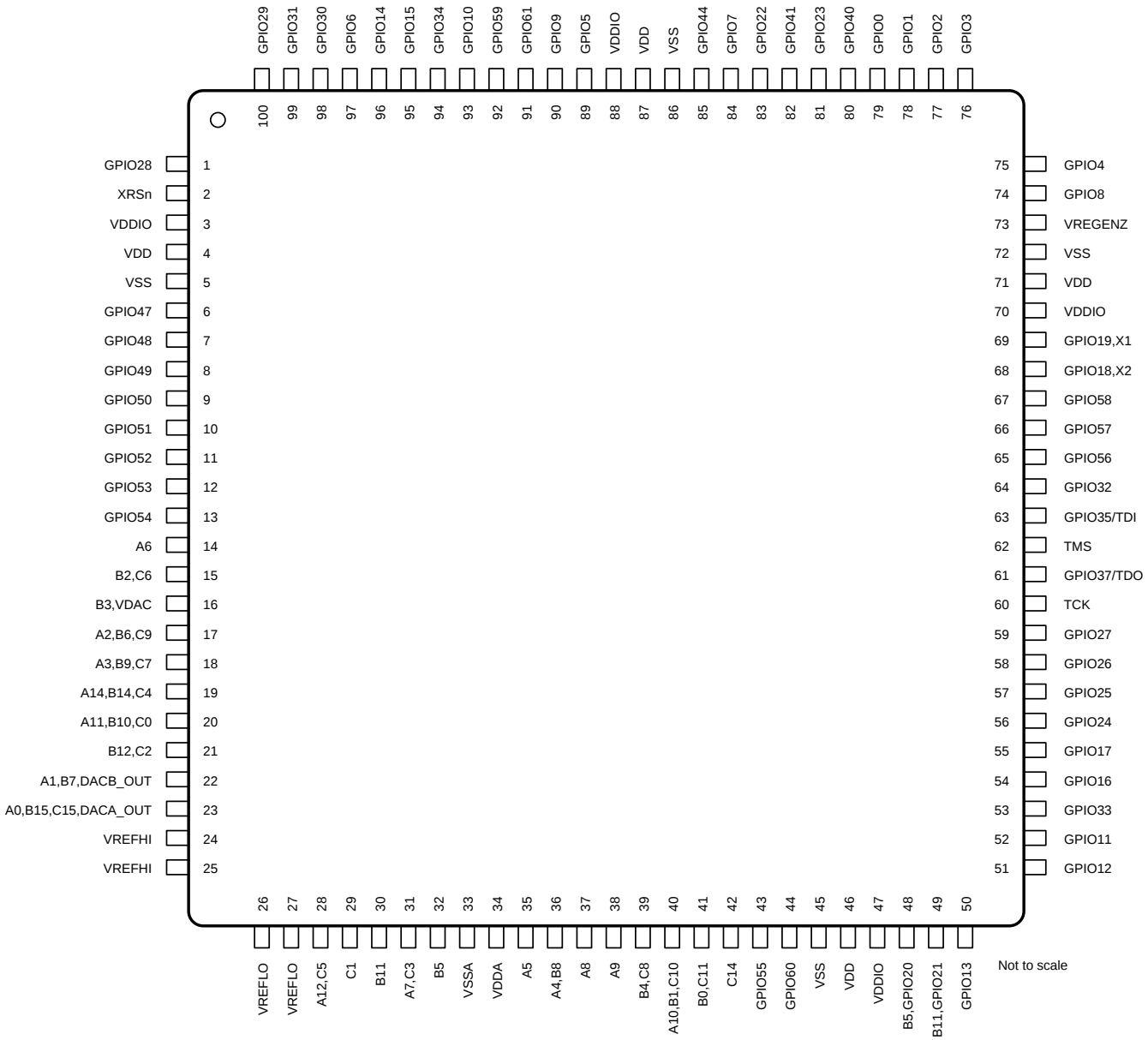

A. Only the GPIO function is shown on GPIO pins. See Section 5.2 for the complete, muxed signal name.

Figure 5-1. 100-Pin PZ Low-Profile Quad Flatpack (Top View)

Copyright © 2022 Texas Instruments Incorporated

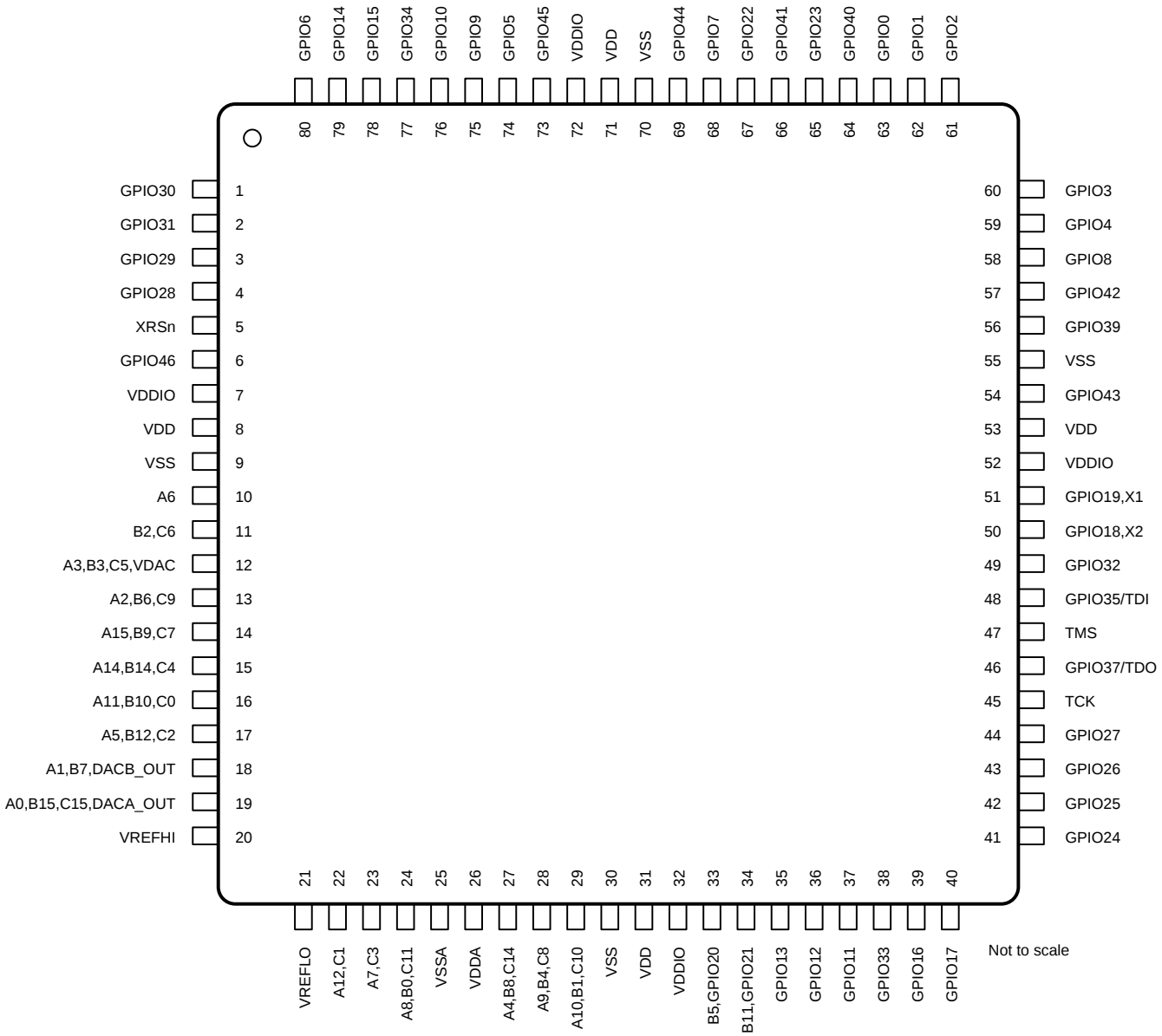

A. Only the GPIO function is shown on GPIO pins. See Section 5.2 for the complete, muxed signal name.

Figure 5-2. 80-Pin PN Low-Profile Quad Flatpack (Top View)

Copyright © 2022 Texas Instruments Incorporated

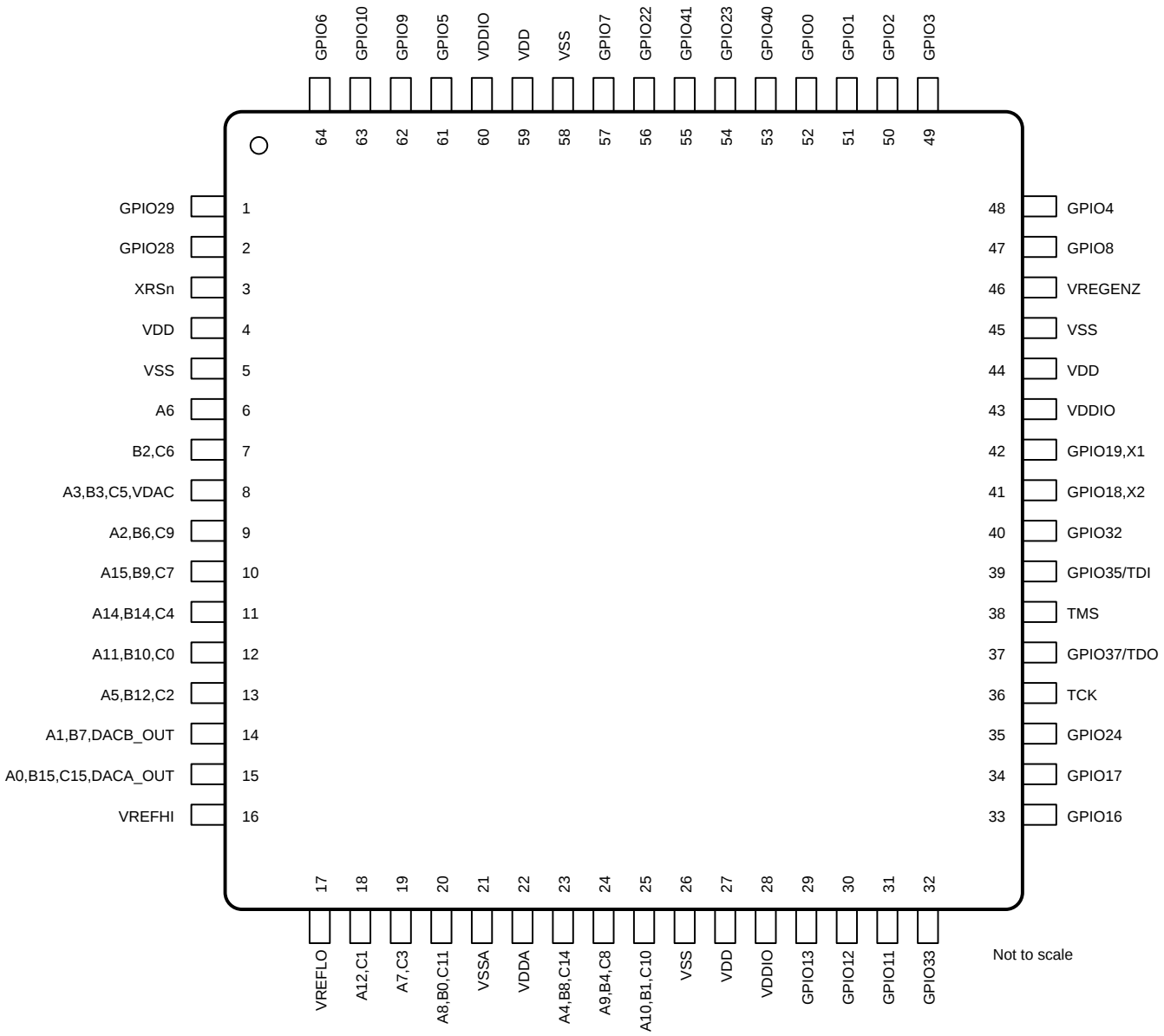

A. Only the GPIO function is shown on GPIO pins. See Section 5.2 for the complete, muxed signal name.

Figure 5-3. 64-Pin PM Low-Profile Quad Flatpack - Q Temperature (Top View)

Copyright © 2022 Texas Instruments Incorporated

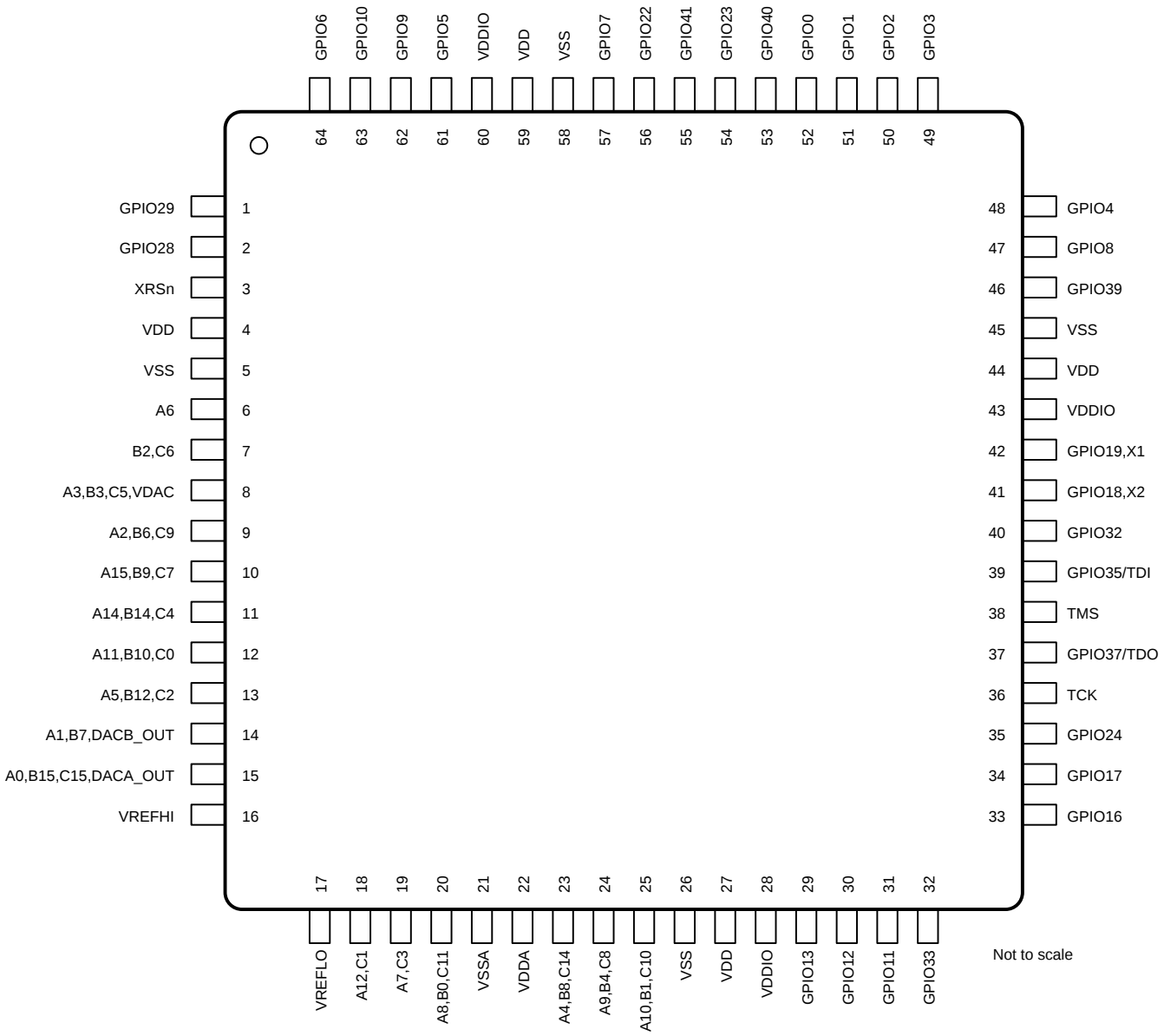

A. Only the GPIO function is shown on GPIO pins. See Section 5.2 for the complete, muxed signal name.

Figure 5-4. 64-Pin PM Low-Profile Quad Flatpack (Top View)

Copyright © 2022 Texas Instruments Incorporated

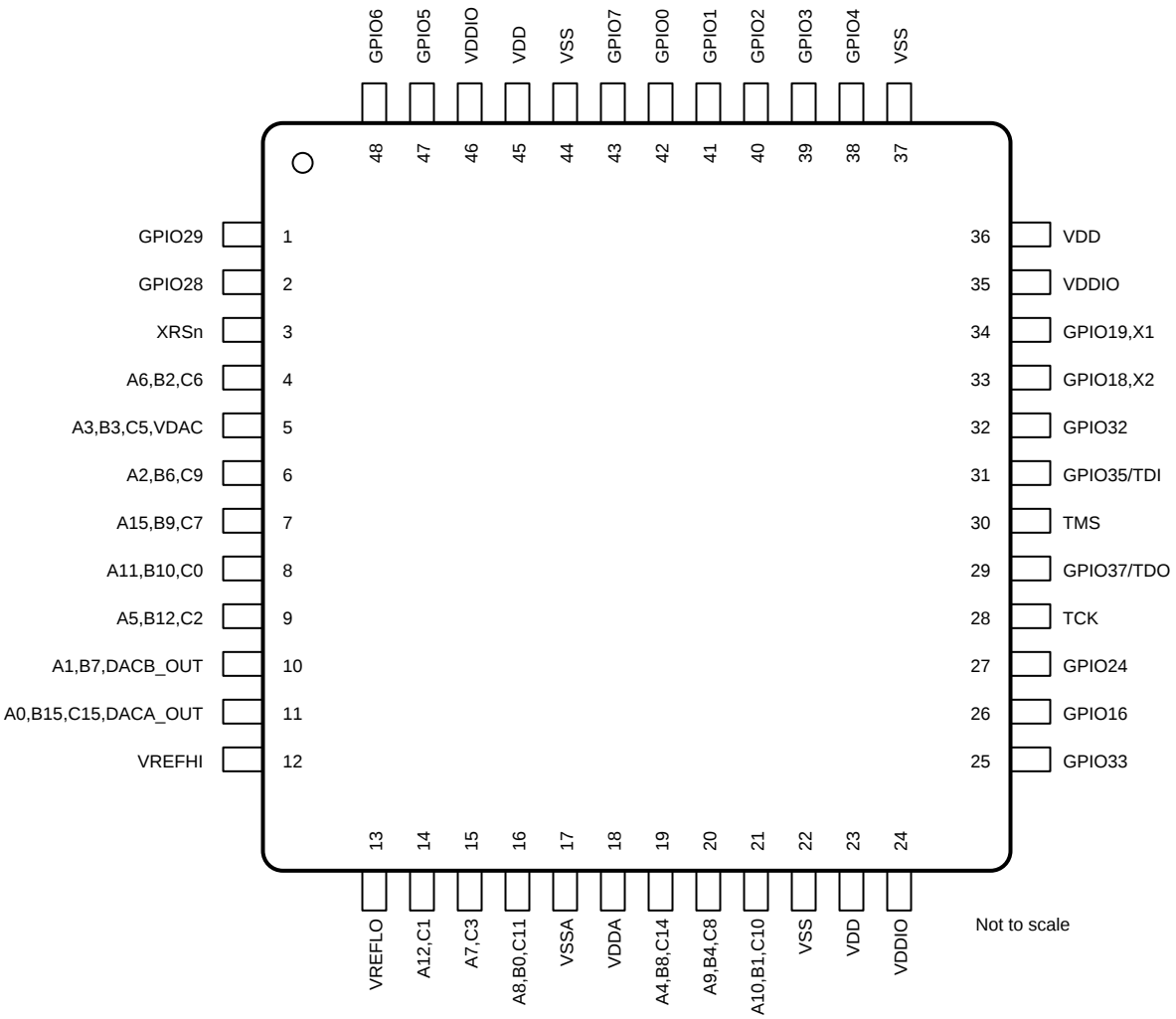

A. Only the GPIO function is shown on GPIO pins. See Section 5.2 for the complete, muxed signal name.

Figure 5-5. 48-Pin PT Low-Profile Quad Flatpack (Top View)

5.2 Pin Attributes

Table 5-1. Pin Attributes

SIGNAL NAME	MUX POSITION	100 PZ	80 PN	64 PM	64 PMQ	48 PT	PIN TYPE	DESCRIPTION
ANALOG								
A0							I	ADC-A Input 0
B15							I	ADC-B Input 15
C15							I	ADC-C Input 15
DACA_OUT							O	Buffered DAC-A Output.
CMP3_HP2		23	19	15	15	11	I	CMPSS-3 High Comparator Positive Input 2
CMP3_LP2							I	CMPSS-3 Low Comparator Positive Input 2
AIO231	0, 4, 8, 12						I	Analog Pin Used For Digital Input 231
SD1_C1	2						I	SDFM-1 Channel 1 Clock Input
HIC_BASESEL1	15						I	HIC Base address range select 1
A1							I	ADC-A Input 1
B7							I	ADC-B Input 7
DACB_OUT							O	Buffered DAC-B Output.
CMP1_HP4		22	18	14	14	10	I	CMPSS-1 High Comparator Positive Input 4
CMP1_LP4							I	CMPSS-1 Low Comparator Positive Input 4
AIO232	0, 4, 8, 12						I	Analog Pin Used For Digital Input 232
SD1_D4	2						I	SDFM-1 Channel 4 Data Input
HIC_BASESEL0	15						I	HIC Base address range select 0
A10							I	ADC-A Input 10
B1							I	ADC-B Input 1
C10							I	ADC-C Input 10
CMP2_HP3							I	CMPSS-2 High Comparator Positive Input 3
CMP2_HN0		40	29	25	25	21	I	CMPSS-2 High Comparator Negative Input 0
CMP2_LP3							I	CMPSS-2 Low Comparator Positive Input 3
CMP2_LN0							I	CMPSS-2 Low Comparator Negative Input 0
AIO230	0, 4, 8, 12						I	Analog Pin Used For Digital Input 230
SD1_C4	2						I	SDFM-1 Channel 4 Clock Input
HIC_BASESEL2	15						I	HIC Base address range select 2
A11							I	ADC-A Input 11
B10							I	ADC-B Input 10
C0							I	ADC-C Input 0
CMP1_HP1							I	CMPSS-1 High Comparator Positive Input 1
CMP1_HN1		20	16	12	12	8	I	CMPSS-1 High Comparator Negative Input 1
CMP1_LP1							I	CMPSS-1 Low Comparator Positive Input 1
CMP1_LN1							I	CMPSS-1 Low Comparator Negative Input 1
AIO237	0, 4, 8, 12						I	Analog Pin Used For Digital Input 237
SD1_D2	2						I	SDFM-1 Channel 2 Data Input
HIC_A6	15						I	HIC Address 6

Copyright © 2022 Texas Instruments Incorporated

Table 5-1. Pin Attributes (continued)

SIGNAL NAME	MUX POSITION	100 PZ	80 PN	64 PM	64 PMQ	48 PT	PIN TYPE	DESCRIPTION
A12							I	ADC-A Input 12
CMP2_HP1							I	CMPSS-2 High Comparator Positive Input 1
CMP2_HN1							I	CMPSS-2 High Comparator Negative Input 1
CMP2_LP1		28	22	18	18	14	I	CMPSS-2 Low Comparator Positive Input 1
CMP2_LN1							I	CMPSS-2 Low Comparator Negative Input 1
AIO238	0, 4, 8, 12						I	Analog Pin Used For Digital Input 238
SD2_C3	2						I	SDFM-2 Channel 3 Clock Input
HIC_NCS	15						I	HIC Chip select input
A14							I	ADC-A Input 14
B14							I	ADC-B Input 14
C4							I	ADC-C Input 4
CMP3_HP4		19	15	11	11		I	CMPSS-3 High Comparator Positive Input 4
CMP3_LP4							I	CMPSS-3 Low Comparator Positive Input 4
AIO239	0, 4, 8, 12						I	Analog Pin Used For Digital Input 239
SD1_D1	2						I	SDFM-1 Channel 1 Data Input
HIC_A5	15						I	HIC Address 5
A2							I	ADC-A Input 2
B6							I	ADC-B Input 6
C9							I	ADC-C Input 9
CMP1_HP0		17	13	9	9	6	I	CMPSS-1 High Comparator Positive Input 0
CMP1_LP0							I	CMPSS-1 Low Comparator Positive Input 0
AIO224	0, 4, 8, 12						I	Analog Pin Used For Digital Input 224
SD2_D3	2						I	SDFM-2 Channel 3 Data Input
HIC_A3	15						I	HIC Address 3
A3							I	ADC-A Input 3
CMP3_HP5		18					I	CMPSS-3 High Comparator Positive Input 5
CMP3_LP5							I	CMPSS-3 Low Comparator Positive Input 5
AIO229	0, 4, 8, 12						I	Analog Pin Used For Digital Input 229
A4							I	ADC-A Input 4
B8							I	ADC-B Input 8
CMP2_HP0							I	CMPSS-2 High Comparator Positive Input 0
CMP2_LP0		36	27	23	23	19	I	CMPSS-2 Low Comparator Positive Input 0
AIO225	0, 4, 8, 12						I	Analog Pin Used For Digital Input 225
SD2_C2	2						I	SDFM-2 Channel 2 Clock Input
HIC_NWE	15						I	HIC Data Write enable from host
A5							I	ADC-A Input 5
CMP2_HP5		35					I	CMPSS-2 High Comparator Positive Input 5
CMP2_LP5							I	CMPSS-2 Low Comparator Positive Input 5
AIO249	0, 4, 8, 12						I	Analog Pin Used For Digital Input 249
A6							I	ADC-A Input 6
CMP1_HP2							I	CMPSS-1 High Comparator Positive Input 2
CMP1_LP2		14	10	6	6	4	I	CMPSS-1 Low Comparator Positive Input 2
AIO228	0, 4, 8, 12						I	Analog Pin Used For Digital Input 228
SD2_C1	2						I	SDFM-2 Channel 1 Clock Input
HIC_A0	15						I	HIC Address 0

Copyright © 2022 Texas Instruments Incorporated

Table 5-1. Pin Attributes (continued)

SIGNAL NAME	MUX POSITION	100 PZ	80 PN	64 PM	64 PMQ	48 PT	PIN TYPE	DESCRIPTION
A8							I	ADC-A Input 8
CMP4_HP4							I	CMPSS-4 High Comparator Positive Input 4
CMP4_LP4		37					I	CMPSS-4 Low Comparator Positive Input 4
AIO240	0, 4, 8, 12						I	Analog Pin Used For Digital Input 240
SD2_C1	2						I	SDFM-2 Channel 1 Clock Input
HIC_NBE1	15						I	HIC Byte enable 1
A9							I	ADC-A Input 9
CMP2_HP2							I	CMPSS-2 High Comparator Positive Input 2
CMP2_LP2		38	28	24	24	20	I	CMPSS-2 Low Comparator Positive Input 2
AIO227	0, 4, 8, 12						I	Analog Pin Used For Digital Input 227
SD1_C3	2						I	SDFM-1 Channel 3 Clock Input
HIC_NBE0	15						I	HIC Byte enable 0
B0							I	ADC-B Input 0
C11							I	ADC-C Input 11
CMP2_HP4		41					I	CMPSS-2 High Comparator Positive Input 4
CMP2_LP4							I	CMPSS-2 Low Comparator Positive Input 4
AIO253	0, 4, 8, 12						I	Analog Pin Used For Digital Input 253
B11							I	ADC-B Input 11
CMP4_HP5		30					I	CMPSS-4 High Comparator Positive Input 5
CMP4_LP5							I	CMPSS-4 Low Comparator Positive Input 5
AIO251	0, 4, 8, 12						I	Analog Pin Used For Digital Input 251
B11							I	ADC-B Input 11
CMP4_HP5							I	CMPSS-4 High Comparator Positive Input 5
CMP4_LP5		49	34				I	CMPSS-4 Low Comparator Positive Input 5
GPIO21 (See GPIO Section)	0, 4, 8, 12						I/O	General-Purpose Input Output 21. This pin also has digital mux functions which are described in the DIGITAL section of this table.
B2							I	ADC-B Input 2
C6							I	ADC-C Input 6
CMP3_HP0							I	CMPSS-3 High Comparator Positive Input 0
CMP3_LP0		15	11	7	7	4	I	CMPSS-3 Low Comparator Positive Input 0
AIO226	0, 4, 8, 12						I	Analog Pin Used For Digital Input 226
SD2_D4	2						I	SDFM-2 Channel 4 Data Input
HIC_A1	15						I	HIC Address 1
B3							I	ADC-B Input 3
VDAC							I	Optional external reference voltage for on-chip DACs.
CMP3_HP3							I	CMPSS-3 High Comparator Positive Input 3
CMP3_HN0							I	CMPSS-3 High Comparator Negative Input 0
CMP3_LP3		16	12	8	8	5	I	CMPSS-3 Low Comparator Positive Input 3
CMP3_LN0							I	CMPSS-3 Low Comparator Negative Input 0
AIO242	0, 4, 8, 12						I	Analog Pin Used For Digital Input 242
SD2_D2	2						I	SDFM-2 Channel 2 Data Input
HIC_A2	15						I	HIC Address 2

Copyright © 2022 Texas Instruments Incorporated

Table 5-1. Pin Attributes (continued)

SIGNAL NAME	MUX POSITION	100 PZ	80 PN	64 PM	64 PMQ	48 PT	PIN TYPE	DESCRIPTION
B4							I	ADC-B Input 4
C8							I	ADC-C Input 8
CMP4_HP0		39	28	24	24	20	I	CMPSS-4 High Comparator Positive Input 0
CMP4_LP0							I	CMPSS-4 Low Comparator Positive Input 0
AIO236	0, 4, 8, 12						I	Analog Pin Used For Digital Input 236
B5							I	ADC-B Input 5
CMP1_HP5							I	CMPSS-1 High Comparator Positive Input 5
CMP1_LP5		32					I	CMPSS-1 Low Comparator Positive Input 5
AIO252	0, 4, 8, 12						I	Analog Pin Used For Digital Input 252
SD2_C4	2						I	SDFM-2 Channel 4 Clock Input
B5							I	ADC-B Input 5
CMP1_HP5							I	CMPSS-1 High Comparator Positive Input 5
CMP1_LP5		48	33				I	CMPSS-1 Low Comparator Positive Input 5
GPIO20 (See GPIO Section)	0, 4, 8, 12						I/O	General-Purpose Input Output 20. This pin also has digital mux functions which are described in the DIGITAL section of this table.
C1							I	ADC-C Input 1
CMP4_HP2		29	22	18	18	14	I	CMPSS-4 High Comparator Positive Input 2
CMP4_LP2							I	CMPSS-4 Low Comparator Positive Input 2
AIO248	0, 4, 8, 12						I	Analog Pin Used For Digital Input 248
C14							I	ADC-C Input 14
CMP4_HP3							I	CMPSS-4 High Comparator Positive Input 3
CMP4_HN0		42					I	CMPSS-4 High Comparator Negative Input 0
CMP4_LP3							I	CMPSS-4 Low Comparator Positive Input 3
CMP4_LN0							I	CMPSS-4 Low Comparator Negative Input 0
AIO247	0, 4, 8, 12						I	Analog Pin Used For Digital Input 247
C2							I	ADC-C Input 2
B12							I	ADC-B Input 12
CMP3_HP1							I	CMPSS-3 High Comparator Positive Input 1
CMP3_HN1							I	CMPSS-3 High Comparator Negative Input 1
CMP3_LP1		21	17	13	13	9	I	CMPSS-3 Low Comparator Positive Input 1
CMP3_LN1							I	CMPSS-3 Low Comparator Negative Input 1
AIO244	0, 4, 8, 12						I	Analog Pin Used For Digital Input 244
SD1_D3	2						I	SDFM-1 Channel 3 Data Input
HIC_A7	15						I	HIC Address 7
C3							I	ADC-C Input 3
A7							I	ADC-A Input 7
CMP4_HP1							I	CMPSS-4 High Comparator Positive Input 1
CMP4_HN1							I	CMPSS-4 High Comparator Negative Input 1
CMP4_LP1		31	23	19	19	15	I	CMPSS-4 Low Comparator Positive Input 1
CMP4_LN1							I	CMPSS-4 Low Comparator Negative Input 1
AIO245	0, 4, 8, 12						I	Analog Pin Used For Digital Input 245
SD1_C2	2						I	SDFM-1 Channel 2 Clock Input
HIC_NOE	15						O	HIC Output enable for data bus
C5		28	12	8	8	5	I	ADC-C Input 5

Copyright © 2022 Texas Instruments Incorporated

Table 5-1. Pin Attributes (continued)

SIGNAL NAME	MUX POSITION	100 PZ	80 PN	64 PM	64 PMQ	48 PT	PIN TYPE	DESCRIPTION
C7		18	14	10	10	7	I	ADC-C Input 7
B9							I	ADC-B Input 9
VREFHI		25	20	16	16	12	I	ADC High Reference. In external reference mode, externally drive the high reference voltage onto this pin. In internal reference mode, a voltage is driven onto this pin by the device. In either mode, place at least a 2.2-µF capacitor on this pin. This capacitor should be placed as close to the device as possible between the VREFHI and VREFLO pins.
VREFLO		27	21	17	17	13	I	ADC Low Reference
A15							I	ADC-A Input 15
CMP1_HP3							I	CMPSS-1 High Comparator Positive Input 3
CMP1_HN0							I	CMPSS-1 High Comparator Negative Input 0
CMP1_LP3							I	CMPSS-1 Low Comparator Positive Input 3
CMP1_LN0			14	10	10	7	I	CMPSS-1 Low Comparator Negative Input 0
AIO233	0, 4, 8, 12						I	Analog Pin Used For Digital Input 233
SD2_D1	2						I	SDFM-2 Channel 1 Data Input
HIC_A4	15						I	HIC Address 4
A3							I	ADC-A Input 3
CMP3_HP5			12	8	8	5	I	CMPSS-3 High Comparator Positive Input 5
CMP3_LP5							I	CMPSS-3 Low Comparator Positive Input 5
A5							I	ADC-A Input 5
CMP2_HP5			17	13	13	9	I	CMPSS-2 High Comparator Positive Input 5
CMP2_LP5							I	CMPSS-2 Low Comparator Positive Input 5
A8							I	ADC-A Input 8
CMP4_HP4							I	CMPSS-4 High Comparator Positive Input 4
CMP4_LP4							I	CMPSS-4 Low Comparator Positive Input 4
AIO241	0, 4, 8, 12		24	20	20	16	I	Analog Pin Used For Digital Input 241
SD2_C1	2						I	SDFM-2 Channel 1 Clock Input
HIC_NBE1	15						I	HIC Byte enable 1
B0							I	ADC-B Input 0
C11							I	ADC-C Input 11
CMP2_HP4			24	20	20	16	I	CMPSS-2 High Comparator Positive Input 4
CMP2_LP4							I	CMPSS-2 Low Comparator Positive Input 4
C14							I	ADC-C Input 14
CMP4_HP3							I	CMPSS-4 High Comparator Positive Input 3
CMP4_HN0			27	23	23	19	I	CMPSS-4 High Comparator Negative Input 0
CMP4_LP3							I	CMPSS-4 Low Comparator Positive Input 3
CMP4_LN0							I	CMPSS-4 Low Comparator Negative Input 0

Copyright © 2022 Texas Instruments Incorporated

Table 5-1. Pin Attributes (continued)

SIGNAL NAME	MUX POSITION	100 PZ	80 PN	64 PM	64 PMQ	48 PT	PIN TYPE	DESCRIPTION
GPIO								
GPIO0	0, 4, 8, 12	79	63	52	52	42	I/O	General-Purpose Input Output 0
EPWM1_A	1						O	ePWM-1 Output A
I2CA_SDA	6						I/OD	I2C-A Open-Drain Bidirectional Data
SPIA_STE	7						I/O	SPI-A Slave Transmit Enable (STE)
FSIRXA_CLK	9						I	FSIRX-A Input Clock
MCAN_RX	10						I	CAN/CAN FD Receive
CLB_OUTPUTXBAR8	11						O	CLB Output X-BAR Output 8
EQEP1_INDEX	13						I/O	eQEP-1 Index
HIC_D7	14						I/O	HIC Data 7
HIC_BASESEL1	15						I	HIC Base address range select 1
GPIO1	0, 4, 8, 12	78	62	51	51	41	I/O	General-Purpose Input Output 1
EPWM1_B	1						O	ePWM-1 Output B
I2CA_SCL	6						I/OD	I2C-A Open-Drain Bidirectional Clock
SPIA_SOMI	7						I/O	SPI-A Slave Out, Master In (SOMI)
MCAN_TX	10						O	CAN/CAN FD Transmit
CLB_OUTPUTXBAR7	11						O	CLB Output X-BAR Output 7
HIC_A2	13						I	HIC Address 2
FSITXA_TDM_D1	14						I	FSITX-A Time Division Multiplexed Additional Data Input
HIC_D10	15						I/O	HIC Data 10
GPIO2	0, 4, 8, 12	77	61	50	50	40	I/O	General-Purpose Input Output 2
EPWM2_A	1						O	ePWM-2 Output A
OUTPUTXBAR1	5						O	Output X-BAR Output 1
PMBUSA_SDA	6						I/OD	PMBus-A Open-Drain Bidirectional Data
SPIA_SIMO	7						I/O	SPI-A Slave In, Master Out (SIMO)
SCIA_TX	9						O	SCI-A Transmit Data
FSIRXA_D1	10						I	FSIRX-A Optional Additional Data Input
I2CB_SDA	11						I/OD	I2C-B Open-Drain Bidirectional Data
HIC_A1	13						I	HIC Address 1
CANA_TX	14						O	CAN-A Transmit
HIC_D9	15						I/O	HIC Data 9
GPIO3	0, 4, 8, 12	76	60	49	49	39	I/O	General-Purpose Input Output 3
EPWM2_B	1						O	ePWM-2 Output B
OUTPUTXBAR2	2, 5						O	Output X-BAR Output 2
PMBUSA_SCL	6						I/OD	PMBus-A Open-Drain Bidirectional Clock
SPIA_CLK	7						I/O	SPI-A Clock
SCIA_RX	9						I	SCI-A Receive Data
FSIRXA_D0	10						I	FSIRX-A Primary Data Input
I2CB_SCL	11						I/OD	I2C-B Open-Drain Bidirectional Clock
HIC_NOE	13						O	HIC Output enable for data bus
CANA_RX	14						I	CAN-A Receive
HIC_D4	15						I/O	HIC Data 4

Copyright © 2022 Texas Instruments Incorporated

Table 5-1. Pin Attributes (continued)

SIGNAL NAME	MUX POSITION	100 PZ	80 PN	64 PM	64 PMQ	48 PT	PIN TYPE	DESCRIPTION
GPIO4	0, 4, 8, 12						I/O	General-Purpose Input Output 4
EPWM3_A	1						O	ePWM-3 Output A
MCAN_TX	3						O	CAN/CAN FD Transmit
OUTPUTXBAR3	5						O	Output X-BAR Output 3
CANA_TX	6						O	CAN-A Transmit
SPIB_CLK	7	75	59	48	48	38	I/O	SPI-B Clock
EQEP2_STROBE	9						I/O	eQEP-2 Strobe
FSIRXA_CLK	10						I	FSIRX-A Input Clock
CLB_OUTPUTXBAR6	11						O	CLB Output X-BAR Output 6
HIC_BASESEL2	13						I	HIC Base address range select 2
HIC_NWE	15						I	HIC Data Write enable from host
GPIO5	0, 4, 8, 12						I/O	General-Purpose Input Output 5
EPWM3_B	1						O	ePWM-3 Output B
OUTPUTXBAR3	3						O	Output X-BAR Output 3
MCAN_RX	5						I	CAN/CAN FD Receive
CANA_RX	6						I	CAN-A Receive
SPIA_STE	7	89	74	61	61	47	I/O	SPI-A Slave Transmit Enable (STE)
FSITXA_D1	9						O	FSITX-A Optional Additional Data Output
CLB_OUTPUTXBAR5	10						O	CLB Output X-BAR Output 5
HIC_A7	13						I	HIC Address 7
HIC_D4	14						I/O	HIC Data 4
HIC_D15	15						I/O	HIC Data 15
GPIO6	0, 4, 8, 12						I/O	General-Purpose Input Output 6
EPWM4_A	1						O	ePWM-4 Output A
OUTPUTXBAR4	2						O	Output X-BAR Output 4
SYNCOUT	3						O	External ePWM Synchronization Pulse
EQEP1_A	5						I	eQEP-1 Input A
SPIB_SOMI	7	97	80	64	64	48	I/O	SPI-B Slave Out, Master In (SOMI)
FSITXA_D0	9						O	FSITX-A Primary Data Output
FSITXA_D1	11						O	FSITX-A Optional Additional Data Output
HIC_NBE1	13						I	HIC Byte enable 1
CLB_OUTPUTXBAR8	14						O	CLB Output X-BAR Output 8
HIC_D14	15						I/O	HIC Data 14
GPIO7	0, 4, 8, 12						I/O	General-Purpose Input Output 7
EPWM4_B	1						O	ePWM-4 Output B
OUTPUTXBAR5	3						O	Output X-BAR Output 5
EQEP1_B	5						I	eQEP-1 Input B
SPIB_SIMO	7	84	68	57	57	43	I/O	SPI-B Slave In, Master Out (SIMO)
FSITXA_CLK	9						O	FSITX-A Output Clock
CLB_OUTPUTXBAR2	10						O	CLB Output X-BAR Output 2
HIC_A6	13						I	HIC Address 6
HIC_D14	15						I/O	HIC Data 14

Copyright © 2022 Texas Instruments Incorporated

Table 5-1. Pin Attributes (continued)

SIGNAL NAME	MUX POSITION	100 PZ	80 PN	64 PM	64 PMQ	48 PT	PIN TYPE	DESCRIPTION
GPIO8	0, 4, 8, 12	74	58	47	47		I/O	General-Purpose Input Output 8
EPWM5_A	1						O	ePWM-5 Output A
ADCSOCAO	3						O	ADC Start of Conversion A for External ADC
EQEP1_STROBE	5						I/O	eQEP-1 Strobe
SCIA_TX	6						O	SCI-A Transmit Data
SPIA_SIMO	7						I/O	SPI-A Slave In, Master Out (SIMO)
I2CA_SCL	9						I/OD	I2C-A Open-Drain Bidirectional Clock
FSITXA_D1	10						O	FSITX-A Optional Additional Data Output
CLB_OUTPUTXBAR5	11						O	CLB Output X-BAR Output 5
HIC_A0	13						I	HIC Address 0
FSITXA_TDM_CLK	14						I	FSITX-A Time Division Multiplexed Clock Input
HIC_D8	15						I/O	HIC Data 8
GPIO9	0, 4, 8, 12	90	75	62	62		I/O	General-Purpose Input Output 9
EPWM5_B	1						O	ePWM-5 Output B
SCIB_TX	2						O	SCI-B Transmit Data
OUTPUTXBAR6	3						O	Output X-BAR Output 6
EQEP1_INDEX	5						I/O	eQEP-1 Index
SCIA_RX	6						I	SCI-A Receive Data
SPIA_CLK	7						I/O	SPI-A Clock
FSITXA_D0	10						O	FSITX-A Primary Data Output
LINB_RX	11						I	LIN-B Receive
HIC_BASESEL0	13						I	HIC Base address range select 0
I2CB_SCL	14						I/OD	I2C-B Open-Drain Bidirectional Clock
HIC_NRDY	15						O	HIC Ready from device to host
GPIO10	0, 4, 8, 12	93	76	63	63		I/O	General-Purpose Input Output 10
EPWM6_A	1						O	ePWM-6 Output A
ADCSOCBO	3						O	ADC Start of Conversion B for External ADC
EQEP1_A	5						I	eQEP-1 Input A
SCIB_TX	6						O	SCI-B Transmit Data
SPIA_SOMI	7						I/O	SPI-A Slave Out, Master In (SOMI)
I2CA_SDA	9						I/OD	I2C-A Open-Drain Bidirectional Data
FSITXA_CLK	10						O	FSITX-A Output Clock
LINB_TX	11						O	LIN-B Transmit
HIC_NWE	13						I	HIC Data Write enable from host
FSITXA_TDM_D0	14						I	FSITX-A Time Division Multiplexed Data Input
CLB_OUTPUTXBAR4	15						O	CLB Output X-BAR Output 4

Copyright © 2022 Texas Instruments Incorporated

Table 5-1. Pin Attributes (continued)

SIGNAL NAME	MUX POSITION	100 PZ	80 PN	64 PM	64 PMQ	48 PT	PIN TYPE	DESCRIPTION
GPIO11	0, 4, 8, 12	52	37	31	31		I/O	General-Purpose Input Output 11
EPWM6_B	1						O	ePWM-6 Output B
OUTPUTXBAR7	3						O	Output X-BAR Output 7
EQEP1_B	5						I	eQEP-1 Input B
SCIB_RX	6						I	SCI-B Receive Data
SPIA_STE	7						I/O	SPI-A Slave Transmit Enable (STE)
FSIRXA_D1	9						I	FSIRX-A Optional Additional Data Input
LINB_RX	10						I	LIN-B Receive
EQEP2_A	11						I	eQEP-2 Input A
SPIA_SIMO	13						I/O	SPI-A Slave In, Master Out (SIMO)
HIC_D6	14						I/O	HIC Data 6
HIC_NBE0	15						I	HIC Byte enable 0
GPIO12	0, 4, 8, 12	51	36	30	30		I/O	General-Purpose Input Output 12
EPWM7_A	1						O	ePWM-7 Output A
MCAN_RX	3						I	CAN/CAN FD Receive
EQEP1_STROBE	5						I/O	eQEP-1 Strobe
SCIB_TX	6						O	SCI-B Transmit Data
PMBUSA_CTL	7						I/O	PMBus-A Control Signal - Slave Input/Master Output
FSIRXA_D0	9						I	FSIRX-A Primary Data Input
LINB_TX	10						O	LIN-B Transmit
SPIA_CLK	11						I/O	SPI-A Clock
CANA_RX	13						I	CAN-A Receive
HIC_D13	14						I/O	HIC Data 13
HIC_INT	15						O	HIC Device interrupt to host
GPIO13	0, 4, 8, 12	50	35	29	29		I/O	General-Purpose Input Output 13
EPWM7_B	1						O	ePWM-7 Output B
MCAN_TX	3						O	CAN/CAN FD Transmit
EQEP1_INDEX	5						I/O	eQEP-1 Index
SCIB_RX	6						I	SCI-B Receive Data
PMBUSA_ALERT	7						I/OD	PMBus-A Open-Drain Bidirectional Alert Signal
FSIRXA_CLK	9						I	FSIRX-A Input Clock
LINB_RX	10						I	LIN-B Receive
SPIA_SOMI	11						I/O	SPI-A Slave Out, Master In (SOMI)
CANA_TX	13						O	CAN-A Transmit
HIC_D11	14						I/O	HIC Data 11
HIC_D5	15						I/O	HIC Data 5

Copyright © 2022 Texas Instruments Incorporated

Table 5-1. Pin Attributes (continued)

SIGNAL NAME	MUX POSITION	100 PZ	80 PN	64 PM	64 PMQ	48 PT	PIN TYPE	DESCRIPTION
GPIO14	0, 4, 8, 12	96	79				I/O	General-Purpose Input Output 14
EPWM8_A	1						O	ePWM-8 Output A
SCIB_TX	2						O	SCI-B Transmit Data
I2CB_SDA	5						I/OD	I2C-B Open-Drain Bidirectional Data
OUTPUTXBAR3	6						O	Output X-BAR Output 3
PMBUSA_SDA	7						I/OD	PMBus-A Open-Drain Bidirectional Data
SPIB_CLK	9						I/O	SPI-B Clock
EQEP2_A	10						I	eQEP-2 Input A
LINB_TX	11						O	LIN-B Transmit
EPWM3_A	13						O	ePWM-3 Output A
CLB_OUTPUTXBAR7	14						O	CLB Output X-BAR Output 7
HIC_D15	15						I/O	HIC Data 15
GPIO15	0, 4, 8, 12	95	78				I/O	General-Purpose Input Output 15
EPWM8_B	1						O	ePWM-8 Output B
SCIB_RX	2						I	SCI-B Receive Data
I2CB_SCL	5						I/OD	I2C-B Open-Drain Bidirectional Clock
OUTPUTXBAR4	6						O	Output X-BAR Output 4
PMBUSA_SCL	7						I/OD	PMBus-A Open-Drain Bidirectional Clock
SPIB_STE	9						I/O	SPI-B Slave Transmit Enable (STE)
EQEP2_B	10						I	eQEP-2 Input B
LINB_RX	11						I	LIN-B Receive
EPWM3_B	13						O	ePWM-3 Output B
CLB_OUTPUTXBAR6	14						O	CLB Output X-BAR Output 6
HIC_D12	15						I/O	HIC Data 12
GPIO16	0, 4, 8, 12	54	39	33	33	26	I/O	General-Purpose Input Output 16
SPIA_SIMO	1						I/O	SPI-A Slave In, Master Out (SIMO)
OUTPUTXBAR7	3						O	Output X-BAR Output 7
EPWM5_A	5						O	ePWM-5 Output A
SCIA_TX	6						O	SCI-A Transmit Data
SD1_D1	7						I	SDFM-1 Channel 1 Data Input
EQEP1_STROBE	9						I/O	eQEP-1 Strobe
PMBUSA_SCL	10						I/OD	PMBus-A Open-Drain Bidirectional Clock
XCLKOUT	11						O	External Clock Output. This pin outputs a divided-down version of a chosen clock signal from within the device.
EQEP2_B	13						I	eQEP-2 Input B
SPIB_SOMI	14						I/O	SPI-B Slave Out, Master In (SOMI)
HIC_D1	15						I/O	HIC Data 1

Copyright © 2022 Texas Instruments Incorporated

Table 5-1. Pin Attributes (continued)

SIGNAL NAME	MUX POSITION	100 PZ	80 PN	64 PM	64 PMQ	48 PT	PIN TYPE	DESCRIPTION
GPIO17	0, 4, 8, 12	55	40	34	34		I/O	General-Purpose Input Output 17
SPIA_SOMI	1						I/O	SPI-A Slave Out, Master In (SOMI)
OUTPUTXBAR8	3						O	Output X-BAR Output 8
EPWM5_B	5						O	ePWM-5 Output B
SCIA_RX	6						I	SCI-A Receive Data
SD1_C1	7						I	SDFM-1 Channel 1 Clock Input
EQEP1_INDEX	9						I/O	eQEP-1 Index
PMBUSA_SDA	10						I/OD	PMBus-A Open-Drain Bidirectional Data
CANA_TX	11						O	CAN-A Transmit
HIC_D2	15						I/O	HIC Data 2
GPIO18	0, 4, 8, 12	68	50	41	41	33	I/O	General-Purpose Input Output 18
SPIA_CLK	1						I/O	SPI-A Clock
SCIB_TX	2						O	SCI-B Transmit Data
CANA_RX	3						I	CAN-A Receive
EPWM6_A	5						O	ePWM-6 Output A
I2CA_SCL	6						I/OD	I2C-A Open-Drain Bidirectional Clock
SD1_D2	7						I	SDFM-1 Channel 2 Data Input
EQEP2_A	9						I	eQEP-2 Input A
PMBUSA_CTL	10						I/O	PMBus-A Control Signal - Slave Input/Master Output
XCLKOUT	11						O	External Clock Output. This pin outputs a divided-down version of a chosen clock signal from within the device.
LINB_TX	13						O	LIN-B Transmit
FSITXA_TDM_CLK	14						I	FSITX-A Time Division Multiplexed Clock Input
HIC_INT	15						O	HIC Device interrupt to host
X2	ALT						I/O	Crystal oscillator output.
GPIO19	0, 4, 8, 12	69	51	42	42	34	I/O	General-Purpose Input Output 19
SPIA_STE	1						I/O	SPI-A Slave Transmit Enable (STE)
SCIB_RX	2						I	SCI-B Receive Data
CANA_TX	3						O	CAN-A Transmit
EPWM6_B	5						O	ePWM-6 Output B
I2CA_SDA	6						I/OD	I2C-A Open-Drain Bidirectional Data
SD1_C2	7						I	SDFM-1 Channel 2 Clock Input
EQEP2_B	9						I	eQEP-2 Input B
PMBUSA_ALERT	10						I/OD	PMBus-A Open-Drain Bidirectional Alert Signal
CLB_OUTPUTXBAR1	11						O	CLB Output X-BAR Output 1
LINB_RX	13						I	LIN-B Receive
FSITXA_TDM_D0	14						I	FSITX-A Time Division Multiplexed Data Input
HIC_NBE0	15						I	HIC Byte enable 0
X1	ALT						I/O	Crystal oscillator input or single-ended clock input. The device initialization software must configure this pin before the crystal oscillator is enabled. To use this oscillator, a quartz crystal circuit must be connected to X1 and X2. This pin can also be used to feed a single-ended 3.3-V level clock. See the XTAL section for usage details.

Copyright © 2022 Texas Instruments Incorporated

Table 5-1. Pin Attributes (continued)

SIGNAL NAME	MUX POSITION	100 PZ	80 PN	64 PM	64 PMQ	48 PT	PIN TYPE	DESCRIPTION
GPIO20 (See ANALOG Section)	0, 4, 8, 12	48	33				I/O	General-Purpose Input Output 20. This pin also has analog functions which are described in the ANALOG section of this table.
EQEP1_A	1						I	eQEP-1 Input A
SPIB_SIMO	6						I/O	SPI-B Slave In, Master Out (SIMO)
SD1_D3	7						I	SDFM-1 Channel 3 Data Input
MCAN_TX	9						O	CAN/CAN FD Transmit
GPIO21 (See ANALOG Section)	0, 4, 8, 12	49	34				I/O	General-Purpose Input Output 21. This pin also has analog functions which are described in the ANALOG section of this table.
EQEP1_B	1						I	eQEP-1 Input B
SPIB_SOMI	6						I/O	SPI-B Slave Out, Master In (SOMI)
SD1_C3	7						I	SDFM-1 Channel 3 Clock Input
MCAN_RX	9						I	CAN/CAN FD Receive
GPIO22	0, 4, 8, 12	83	67	56	56		I/O	General-Purpose Input Output 22
EQEP1_STROBE	1						I/O	eQEP-1 Strobe
SCIB_TX	3						O	SCI-B Transmit Data
SPIB_CLK	6						I/O	SPI-B Clock
SD1_D4	7						I	SDFM-1 Channel 4 Data Input
LINA_TX	9						O	LIN-A Transmit
CLB_OUTPUTXBAR1	10						O	CLB Output X-BAR Output 1
LINB_TX	11						O	LIN-B Transmit
HIC_A5	13						I	HIC Address 5
EPWM4_A	14						O	ePWM-4 Output A
HIC_D13	15						I/O	HIC Data 13
GPIO23	0, 4, 8, 12	81	65	54	54		I/O	General-Purpose Input Output 23
EQEP1_INDEX	1						I/O	eQEP-1 Index
SCIB_RX	3						I	SCI-B Receive Data
SPIB_STE	6						I/O	SPI-B Slave Transmit Enable (STE)
SD1_C4	7						I	SDFM-1 Channel 4 Clock Input
LINA_RX	9						I	LIN-A Receive
CLB_OUTPUTXBAR3	10						O	CLB Output X-BAR Output 3
LINB_RX	11						I	LIN-B Receive
HIC_A3	13						I	HIC Address 3
EPWM4_B	14						O	ePWM-4 Output B
HIC_D11	15						I/O	HIC Data 11

Copyright © 2022 Texas Instruments Incorporated

Table 5-1. Pin Attributes (continued)

SIGNAL NAME	MUX POSITION	100 PZ	80 PN	64 PM	64 PMQ	48 PT	PIN TYPE	DESCRIPTION
GPIO24	0, 4, 8, 12	56	41	35	35	27	I/O	General-Purpose Input Output 24
OUTPUTXBAR1	1						O	Output X-BAR Output 1
EQEP2_A	2						I	eQEP-2 Input A
EPWM8_A	5						O	ePWM-8 Output A
SPIB_SIMO	6						I/O	SPI-B Slave In, Master Out (SIMO)
SD2_D1	7						I	SDFM-2 Channel 1 Data Input
LINB_TX	9						O	LIN-B Transmit
PMBUSA_SCL	10						I/OD	PMBus-A Open-Drain Bidirectional Clock
SCIA_TX	11						O	SCI-A Transmit Data
ERRORSTS	13						O	Error Status Output. This signal requires an external pulldown.
HIC_D3	15						I/O	HIC Data 3
GPIO25	0, 4, 8, 12	57	42				I/O	General-Purpose Input Output 25
OUTPUTXBAR2	1						O	Output X-BAR Output 2
EQEP2_B	2						I	eQEP-2 Input B
EQEP1_A	5						I	eQEP-1 Input A
SPIB_SOMI	6						I/O	SPI-B Slave Out, Master In (SOMI)
SD2_C1	7						I	SDFM-2 Channel 1 Clock Input
FSITXA_D1	9						O	FSITX-A Optional Additional Data Output
PMBUSA_SDA	10						I/OD	PMBus-A Open-Drain Bidirectional Data
SCIA_RX	11						I	SCI-A Receive Data
HIC_BASESEL0	14						I	HIC Base address range select 0
GPIO26	0, 4, 8, 12	58	43				I/O	General-Purpose Input Output 26
OUTPUTXBAR3	1, 5						O	Output X-BAR Output 3
EQEP2_INDEX	2						I/O	eQEP-2 Index
SPIB_CLK	6						I/O	SPI-B Clock
SD2_D2	7						I	SDFM-2 Channel 2 Data Input
FSITXA_D0	9						O	FSITX-A Primary Data Output
PMBUSA_CTL	10						I/O	PMBus-A Control Signal - Slave Input/Master Output
I2CA_SDA	11						I/OD	I2C-A Open-Drain Bidirectional Data
HIC_D0	14						I/O	HIC Data 0
HIC_A1	15						I	HIC Address 1
GPIO27	0, 4, 8, 12	59	44				I/O	General-Purpose Input Output 27
OUTPUTXBAR4	1, 5						O	Output X-BAR Output 4
EQEP2_STROBE	2						I/O	eQEP-2 Strobe
SPIB_STE	6						I/O	SPI-B Slave Transmit Enable (STE)
SD2_C2	7						I	SDFM-2 Channel 2 Clock Input
FSITXA_CLK	9						O	FSITX-A Output Clock
PMBUSA_ALERT	10						I/OD	PMBus-A Open-Drain Bidirectional Alert Signal
I2CA_SCL	11						I/OD	I2C-A Open-Drain Bidirectional Clock
HIC_D1	14						I/O	HIC Data 1
HIC_A4	15						I	HIC Address 4

Copyright © 2022 Texas Instruments Incorporated

Table 5-1. Pin Attributes (continued)

SIGNAL NAME	MUX POSITION	100 PZ	80 PN	64 PM	64 PMQ	48 PT	PIN TYPE	DESCRIPTION
GPIO28	0, 4, 8, 12	1	4	2	2	2	I/O	General-Purpose Input Output 28
SCIA_RX	1						I	SCI-A Receive Data
EPWM7_A	3						O	ePWM-7 Output A
OUTPUTXBAR5	5						O	Output X-BAR Output 5
EQEP1_A	6						I	eQEP-1 Input A
SD2_D3	7						I	SDFM-2 Channel 3 Data Input
EQEP2_STROBE	9						I/O	eQEP-2 Strobe
LINA_TX	10						O	LIN-A Transmit
SPIB_CLK	11						I/O	SPI-B Clock
ERRORSTS	13						O	Error Status Output. This signal requires an external pulldown.
I2CB_SDA	14						I/OD	I2C-B Open-Drain Bidirectional Data
HIC_NOE	15						O	HIC Output enable for data bus
GPIO29	0, 4, 8, 12	100	3	1	1	1	I/O	General-Purpose Input Output 29
SCIA_TX	1						O	SCI-A Transmit Data
EPWM7_B	3						O	ePWM-7 Output B
OUTPUTXBAR6	5						O	Output X-BAR Output 6
EQEP1_B	6						I	eQEP-1 Input B
SD2_C3	7						I	SDFM-2 Channel 3 Clock Input
EQEP2_INDEX	9						I/O	eQEP-2 Index
LINA_RX	10						I	LIN-A Receive
SPIB_STE	11						I/O	SPI-B Slave Transmit Enable (STE)
ERRORSTS	13						O	Error Status Output. This signal requires an external pulldown.
I2CB_SCL	14						I/OD	I2C-B Open-Drain Bidirectional Clock
HIC_NCS	15						I	HIC Chip select input
AUXCLKIN	ALT							
GPIO30	0, 4, 8, 12	98	1				I/O	General-Purpose Input Output 30
CANA_RX	1						I	CAN-A Receive
SPIB_SIMO	3						I/O	SPI-B Slave In, Master Out (SIMO)
OUTPUTXBAR7	5						O	Output X-BAR Output 7
EQEP1_STROBE	6						I/O	eQEP-1 Strobe
SD2_D4	7						I	SDFM-2 Channel 4 Data Input
FSIRXA_CLK	9						I	FSIRX-A Input Clock
MCAN_RX	10						I	CAN/CAN FD Receive
EPWM1_A	11						O	ePWM-1 Output A
HIC_D8	14						I/O	HIC Data 8

Copyright © 2022 Texas Instruments Incorporated

Table 5-1. Pin Attributes (continued)

SIGNAL NAME	MUX POSITION	100 PZ	80 PN	64 PM	64 PMQ	48 PT	PIN TYPE	DESCRIPTION
GPIO31	0, 4, 8, 12	99	2				I/O	General-Purpose Input Output 31
CANA_TX	1						O	CAN-A Transmit
SPIB_SOMI	3						I/O	SPI-B Slave Out, Master In (SOMI)
OUTPUTXBAR8	5						O	Output X-BAR Output 8
EQEP1_INDEX	6						I/O	eQEP-1 Index
SD2_C4	7						I	SDFM-2 Channel 4 Clock Input
FSIRXA_D1	9						I	FSIRX-A Optional Additional Data Input
MCAN_TX	10						O	CAN/CAN FD Transmit
EPWM1_B	11						O	ePWM-1 Output B
HIC_D10	14						I/O	HIC Data 10
GPIO32	0, 4, 8, 12	64	49	40	40	32	I/O	General-Purpose Input Output 32
I2CA_SDA	1						I/OD	I2C-A Open-Drain Bidirectional Data
SPIB_CLK	3						I/O	SPI-B Clock
EPWM8_B	5						O	ePWM-8 Output B
LINA_TX	6						O	LIN-A Transmit
SD1_D2	7						I	SDFM-1 Channel 2 Data Input
FSIRXA_D0	9						I	FSIRX-A Primary Data Input
CANA_TX	10						O	CAN-A Transmit
PMBUSA_SDA	11						I/OD	PMBus-A Open-Drain Bidirectional Data
ADCSOCBO	13						O	ADC Start of Conversion B for External ADC
HIC_INT	15						O	HIC Device interrupt to host
GPIO33	0, 4, 8, 12	53	38	32	32	25	I/O	General-Purpose Input Output 33
I2CA_SCL	1						I/OD	I2C-A Open-Drain Bidirectional Clock
SPIB_STE	3						I/O	SPI-B Slave Transmit Enable (STE)
OUTPUTXBAR4	5						O	Output X-BAR Output 4
LINA_RX	6						I	LIN-A Receive
SD1_C2	7						I	SDFM-1 Channel 2 Clock Input
FSIRXA_CLK	9						I	FSIRX-A Input Clock
CANA_RX	10						I	CAN-A Receive
EQEP2_B	11						I	eQEP-2 Input B
ADCSOCAO	13						O	ADC Start of Conversion A for External ADC
SD1_C1	14						I	SDFM-1 Channel 1 Clock Input
HIC_D0	15						I/O	HIC Data 0
GPIO34	0, 4, 8, 12	94	77				I/O	General-Purpose Input Output 34
OUTPUTXBAR1	1						O	Output X-BAR Output 1
PMBUSA_SDA	6						I/OD	PMBus-A Open-Drain Bidirectional Data
HIC_NBE1	13						I	HIC Byte enable 1
I2CB_SDA	14						I/OD	I2C-B Open-Drain Bidirectional Data
HIC_D9	15						I/O	HIC Data 9

Copyright © 2022 Texas Instruments Incorporated

Table 5-1. Pin Attributes (continued)

SIGNAL NAME	MUX POSITION	100 PZ	80 PN	64 PM	64 PMQ	48 PT	PIN TYPE	DESCRIPTION
GPIO35	0, 4, 8, 12	63	48	39	39	31	I/O	General-Purpose Input Output 35
SCIA_RX	1						I	SCI-A Receive Data
I2CA_SDA	3						I/OD	I2C-A Open-Drain Bidirectional Data
CANA_RX	5						I	CAN-A Receive
PMBUSA_SCL	6						I/OD	PMBus-A Open-Drain Bidirectional Clock
LINA_RX	7						I	LIN-A Receive
EQEP1_A	9						I	eQEP-1 Input A
PMBUSA_CTL	10						I/O	PMBus-A Control Signal - Slave Input/Master Output
EPWM5_B	11						O	ePWM-5 Output B
SD2_C1	13						I	SDFM-2 Channel 1 Clock Input
HIC_NWE	14						I	HIC Data Write enable from host
TDI	15						I	JTAG Test Data Input (TDI) - TDI is the default mux selection for the pin. The internal pullup is disabled by default. The internal pullup should be enabled or an external pullup added on the board if this pin is used as JTAG TDI to avoid a floating input.
GPIO37	0, 4, 8, 12	61	46	37	37	29	I/O	General-Purpose Input Output 37
OUTPUTXBAR2	1						O	Output X-BAR Output 2
I2CA_SCL	3						I/OD	I2C-A Open-Drain Bidirectional Clock
SCIA_TX	5						O	SCI-A Transmit Data
CANA_TX	6						O	CAN-A Transmit
LINA_TX	7						O	LIN-A Transmit
EQEP1_B	9						I	eQEP-1 Input B
PMBUSA_ALERT	10						I/OD	PMBus-A Open-Drain Bidirectional Alert Signal
HIC_NRDY	14						O	HIC Ready from device to host
TDO	15						O	JTAG Test Data Output (TDO) - TDO is the default mux selection for the pin. The internal pullup is disabled by default. The TDO function will tristate when there is no JTAG activity, leaving this pin floating; the internal pullup should be enabled or an external pullup added on the board to avoid a floating GPIO input.
GPIO39	0, 4, 8, 12	56	46				I/O	General-Purpose Input Output 39
MCAN_RX	6						I	CAN/CAN FD Receive
FSIRXA_CLK	7						I	FSIRX-A Input Clock
EQEP2_INDEX	9						I/O	eQEP-2 Index
CLB_OUTPUTXBAR2	11						O	CLB Output X-BAR Output 2
SYNCOUT	13						O	External ePWM Synchronization Pulse
EQEP1_INDEX	14						I/O	eQEP-1 Index
HIC_D7	15						I/O	HIC Data 7

Copyright © 2022 Texas Instruments Incorporated

Table 5-1. Pin Attributes (continued)

SIGNAL NAME	MUX POSITION	100 PZ	80 PN	64 PM	64 PMQ	48 PT	PIN TYPE	DESCRIPTION
GPIO40	0, 4, 8, 12	80	64	53	53		I/O	General-Purpose Input Output 40
SPIB_SIMO	1						I/O	SPI-B Slave In, Master Out (SIMO)
EPWM2_B	5						O	ePWM-2 Output B
PMBUSA_SDA	6						I/OD	PMBus-A Open-Drain Bidirectional Data
FSIRXA_D0	7						I	FSIRX-A Primary Data Input
SCIB_TX	9						O	SCI-B Transmit Data
EQEP1_A	10						I	eQEP-1 Input A
LINB_TX	11						O	LIN-B Transmit
HIC_NBE1	14						I	HIC Byte enable 1
HIC_D5	15						I/O	HIC Data 5
GPIO41	0, 4, 8, 12	82	66	55	55		I/O	General-Purpose Input Output 41
EPWM2_A	5						O	ePWM-2 Output A
PMBUSA_SCL	6						I/OD	PMBus-A Open-Drain Bidirectional Clock
FSIRXA_D1	7						I	FSIRX-A Optional Additional Data Input
SCIB_RX	9						I	SCI-B Receive Data
EQEP1_B	10						I	eQEP-1 Input B
LINB_RX	11						I	LIN-B Receive
HIC_A4	13						I	HIC Address 4
SPIB_SOMI	14						I/O	SPI-B Slave Out, Master In (SOMI)
HIC_D12	15						I/O	HIC Data 12
GPIO42	0, 4, 8, 12		57				I/O	General-Purpose Input Output 42
LINA_RX	2						I	LIN-A Receive
OUTPUTXBAR5	3						O	Output X-BAR Output 5
PMBUSA_CTL	5						I/O	PMBus-A Control Signal - Slave Input/Master Output
I2CA_SDA	6						I/OD	I2C-A Open-Drain Bidirectional Data
EQEP1_STROBE	10						I/O	eQEP-1 Strobe
CLB_OUTPUTXBAR3	11						O	CLB Output X-BAR Output 3
HIC_D2	14						I/O	HIC Data 2
HIC_A6	15						I	HIC Address 6
GPIO43	0, 4, 8, 12		54				I/O	General-Purpose Input Output 43
OUTPUTXBAR6	3						O	Output X-BAR Output 6
PMBUSA_ALERT	5, 9						I/OD	PMBus-A Open-Drain Bidirectional Alert Signal
I2CA_SCL	6						I/OD	I2C-A Open-Drain Bidirectional Clock
EQEP1_INDEX	10						I/O	eQEP-1 Index
CLB_OUTPUTXBAR4	11						O	CLB Output X-BAR Output 4
SD2_D3	13						I	SDFM-2 Channel 3 Data Input
HIC_D3	14						I/O	HIC Data 3
HIC_A7	15						I	HIC Address 7

Copyright © 2022 Texas Instruments Incorporated

Table 5-1. Pin Attributes (continued)

SIGNAL NAME	MUX POSITION	100 PZ	80 PN	64 PM	64 PMQ	48 PT	PIN TYPE	DESCRIPTION
GPIO44	0, 4, 8, 12						I/O	General-Purpose Input Output 44
OUTPUTXBAR7	3						O	Output X-BAR Output 7
EQEP1_A	5						I	eQEP-1 Input A
PMBUSA_SDA	6						I/OD	PMBus-A Open-Drain Bidirectional Data
FSITXA_CLK	7						O	FSITX-A Output Clock
PMBUSA_CTL	9	85	69				I/O	PMBus-A Control Signal - Slave Input/Master Output
CLB_OUTPUTXBAR3	10						O	CLB Output X-BAR Output 3
FSIRXA_D0	11						I	FSIRX-A Primary Data Input
HIC_D7	13						I/O	HIC Data 7
LINB_TX	14						O	LIN-B Transmit
HIC_D5	15						I/O	HIC Data 5
GPIO45	0, 4, 8, 12						I/O	General-Purpose Input Output 45
OUTPUTXBAR8	3						O	Output X-BAR Output 8
FSITXA_D0	7						O	FSITX-A Primary Data Output
PMBUSA_ALERT	9		73				I/OD	PMBus-A Open-Drain Bidirectional Alert Signal
CLB_OUTPUTXBAR4	10						O	CLB Output X-BAR Output 4
SD2_C3	13						I	SDFM-2 Channel 3 Clock Input
HIC_D6	15						I/O	HIC Data 6
GPIO46	0, 4, 8, 12						I/O	General-Purpose Input Output 46
LINA_TX	3						O	LIN-A Transmit
MCAN_TX	5						O	CAN/CAN FD Transmit
FSITXA_D1	7		6				O	FSITX-A Optional Additional Data Output
PMBUSA_SDA	9						I/OD	PMBus-A Open-Drain Bidirectional Data
SD2_C4	13						I	SDFM-2 Channel 4 Clock Input
HIC_NWE	15						I	HIC Data Write enable from host
GPIO47	0, 4, 8, 12						I/O	General-Purpose Input Output 47
LINA_RX	3						I	LIN-A Receive
MCAN_RX	5						I	CAN/CAN FD Receive
CLB_OUTPUTXBAR2	7	6					O	CLB Output X-BAR Output 2
PMBUSA_SCL	9						I/OD	PMBus-A Open-Drain Bidirectional Clock
SD2_D4	13						I	SDFM-2 Channel 4 Data Input
FSITXA_TDM_CLK	14						I	FSITX-A Time Division Multiplexed Clock Input
HIC_A6	15						I	HIC Address 6
GPIO48	0, 4, 8, 12						I/O	General-Purpose Input Output 48
OUTPUTXBAR3	1						O	Output X-BAR Output 3
CANA_TX	3						O	CAN-A Transmit
SCIA_TX	6	7					O	SCI-A Transmit Data
SD1_D1	7						I	SDFM-1 Channel 1 Data Input
PMBUSA_SDA	9						I/OD	PMBus-A Open-Drain Bidirectional Data
HIC_A7	15						I	HIC Address 7

Copyright © 2022 Texas Instruments Incorporated

Table 5-1. Pin Attributes (continued)

SIGNAL NAME	MUX POSITION	100 PZ	80 PN	64 PM	64 PMQ	48 PT	PIN TYPE	DESCRIPTION
GPIO49	0, 4, 8, 12						I/O	General-Purpose Input Output 49
OUTPUTXBAR4	1						O	Output X-BAR Output 4
CANA_RX	3						I	CAN-A Receive
SCIA_RX	6						I	SCI-A Receive Data
SD1_C1	7	8					I	SDFM-1 Channel 1 Clock Input
LINA_RX	9						I	LIN-A Receive
SD2_D1	13						I	SDFM-2 Channel 1 Data Input
FSITXA_D0	14						O	FSITX-A Primary Data Output
HIC_D2	15						I/O	HIC Data 2
GPIO50	0, 4, 8, 12						I/O	General-Purpose Input Output 50
EQEP1_A	1						I	eQEP-1 Input A
MCAN_TX	5						O	CAN/CAN FD Transmit
SPIB_SIMO	6						I/O	SPI-B Slave In, Master Out (SIMO)
SD1_D2	7	9					I	SDFM-1 Channel 2 Data Input
I2CB_SDA	9						I/OD	I2C-B Open-Drain Bidirectional Data
SD2_D2	13						I	SDFM-2 Channel 2 Data Input
FSITXA_D1	14						O	FSITX-A Optional Additional Data Output
HIC_D3	15						I/O	HIC Data 3
GPIO51	0, 4, 8, 12						I/O	General-Purpose Input Output 51
EQEP1_B	1						I	eQEP-1 Input B
MCAN_RX	5						I	CAN/CAN FD Receive
SPIB_SOMI	6						I/O	SPI-B Slave Out, Master In (SOMI)
SD1_C2	7	10					I	SDFM-1 Channel 2 Clock Input
I2CB_SCL	9						I/OD	I2C-B Open-Drain Bidirectional Clock
SD2_D3	13						I	SDFM-2 Channel 3 Data Input
FSITXA_CLK	14						O	FSITX-A Output Clock
HIC_D6	15						I/O	HIC Data 6
GPIO52	0, 4, 8, 12						I/O	General-Purpose Input Output 52
EQEP1_STROBE	1						I/O	eQEP-1 Strobe
CLB_OUTPUTXBAR5	5						O	CLB Output X-BAR Output 5
SPIB_CLK	6						I/O	SPI-B Clock
SD1_D3	7	11					I	SDFM-1 Channel 3 Data Input
SYNCOUT	9						O	External ePWM Synchronization Pulse
SD2_D4	13						I	SDFM-2 Channel 4 Data Input
FSIRXA_D0	14						I	FSIRX-A Primary Data Input
HIC_NWE	15						I	HIC Data Write enable from host
GPIO53	0, 4, 8, 12						I/O	General-Purpose Input Output 53
EQEP1_INDEX	1						I/O	eQEP-1 Index
CLB_OUTPUTXBAR6	5						O	CLB Output X-BAR Output 6
SPIB_STE	6						I/O	SPI-B Slave Transmit Enable (STE)
SD1_C3	7	12					I	SDFM-1 Channel 3 Clock Input
ADCSOCAO	9						O	ADC Start of Conversion A for External ADC
CANA_RX	10						I	CAN-A Receive
SD1_C1	13						I	SDFM-1 Channel 1 Clock Input
FSIRXA_D1	14						I	FSIRX-A Optional Additional Data Input

Copyright © 2022 Texas Instruments Incorporated

Table 5-1. Pin Attributes (continued)

SIGNAL NAME	MUX POSITION	100 PZ	80 PN	64 PM	64 PMQ	48 PT	PIN TYPE	DESCRIPTION
GPIO54	0, 4, 8, 12	13					I/O	General-Purpose Input Output 54
SPIA_SIMO	1						I/O	SPI-A Slave In, Master Out (SIMO)
EQEP2_A	5						I	eQEP-2 Input A
OUTPUTXBAR2	6						O	Output X-BAR Output 2
SD1_D4	7						I	SDFM-1 Channel 4 Data Input
ADCSOCBO	9						O	ADC Start of Conversion B for External ADC
LINB_TX	10						O	LIN-B Transmit
SD1_C2	13						I	SDFM-1 Channel 2 Clock Input
FSIRXA_CLK	14						I	FSIRX-A Input Clock
FSITXA_TDM_D1	15						I	FSITX-A Time Division Multiplexed Additional Data Input
GPIO55	0, 4, 8, 12	43					I/O	General-Purpose Input Output 55
SPIA_SOMI	1						I/O	SPI-A Slave Out, Master In (SOMI)
EQEP2_B	5						I	eQEP-2 Input B
OUTPUTXBAR3	6						O	Output X-BAR Output 3
SD1_C4	7						I	SDFM-1 Channel 4 Clock Input
ERRORSTS	9						O	Error Status Output. This signal requires an external pulldown.
LINB_RX	10						I	LIN-B Receive
SD1_C3	13						I	SDFM-1 Channel 3 Clock Input
HIC_A0	15						I	HIC Address 0
GPIO56	0, 4, 8, 12	65					I/O	General-Purpose Input Output 56
SPIA_CLK	1						I/O	SPI-A Clock
CLB_OUTPUTXBAR7	2						O	CLB Output X-BAR Output 7
MCAN_TX	3						O	CAN/CAN FD Transmit
EQEP2_STROBE	5						I/O	eQEP-2 Strobe
SCIB_TX	6						O	SCI-B Transmit Data
SD2_D1	7						I	SDFM-2 Channel 1 Data Input
SPIB_SIMO	9						I/O	SPI-B Slave In, Master Out (SIMO)
I2CA_SDA	10						I/OD	I2C-A Open-Drain Bidirectional Data
EQEP1_A	11						I	eQEP-1 Input A
SD1_C4	13						I	SDFM-1 Channel 4 Clock Input
FSIRXA_D1	14						I	FSIRX-A Optional Additional Data Input
HIC_D6	15						I/O	HIC Data 6
GPIO57	0, 4, 8, 12	66					I/O	General-Purpose Input Output 57
SPIA_STE	1						I/O	SPI-A Slave Transmit Enable (STE)
CLB_OUTPUTXBAR8	2						O	CLB Output X-BAR Output 8
MCAN_RX	3						I	CAN/CAN FD Receive
EQEP2_INDEX	5						I/O	eQEP-2 Index
SCIB_RX	6						I	SCI-B Receive Data
SD2_C1	7						I	SDFM-2 Channel 1 Clock Input
SPIB_SOMI	9						I/O	SPI-B Slave Out, Master In (SOMI)
I2CA_SCL	10						I/OD	I2C-A Open-Drain Bidirectional Clock
EQEP1_B	11						I	eQEP-1 Input B
FSIRXA_CLK	14						I	FSIRX-A Input Clock
HIC_D4	15						I/O	HIC Data 4

Copyright © 2022 Texas Instruments Incorporated

Table 5-1. Pin Attributes (continued)

SIGNAL NAME	MUX POSITION	100 PZ	80 PN	64 PM	64 PMQ	48 PT	PIN TYPE	DESCRIPTION
GPIO58	0, 4, 8, 12	67					I/O	General-Purpose Input Output 58
OUTPUTXBAR1	5						O	Output X-BAR Output 1
SPIB_CLK	6						I/O	SPI-B Clock
SD2_D2	7						I	SDFM-2 Channel 2 Data Input
LINA_TX	9						O	LIN-A Transmit
CANA_TX	10						O	CAN-A Transmit
EQEP1_STROBE	11						I/O	eQEP-1 Strobe
SD2_C2	13						I	SDFM-2 Channel 2 Clock Input
FSIRXA_D0	14						I	FSIRX-A Primary Data Input
HIC_NRDY	15						O	HIC Ready from device to host
GPIO59	0, 4, 8, 12	92					I/O	General-Purpose Input Output 59
OUTPUTXBAR2	5						O	Output X-BAR Output 2
SPIB_STE	6						I/O	SPI-B Slave Transmit Enable (STE)
SD2_C2	7						I	SDFM-2 Channel 2 Clock Input
LINA_RX	9						I	LIN-A Receive
CANA_RX	10						I	CAN-A Receive
EQEP1_INDEX	11						I/O	eQEP-1 Index
SD2_C3	13						I	SDFM-2 Channel 3 Clock Input
FSITXA_TDM_D1	14						I	FSITX-A Time Division Multiplexed Additional Data Input
GPIO60	0, 4, 8, 12	44					I/O	General-Purpose Input Output 60
MCAN_TX	3						O	CAN/CAN FD Transmit
OUTPUTXBAR3	5						O	Output X-BAR Output 3
SPIB_SIMO	6						I/O	SPI-B Slave In, Master Out (SIMO)
SD2_D3	7						I	SDFM-2 Channel 3 Data Input
SD2_C4	13						I	SDFM-2 Channel 4 Clock Input
HIC_A0	15						I	HIC Address 0
GPIO61	0, 4, 8, 12	91					I/O	General-Purpose Input Output 61
MCAN_RX	3						I	CAN/CAN FD Receive
OUTPUTXBAR4	5						O	Output X-BAR Output 4
SPIB_SOMI	6						I/O	SPI-B Slave Out, Master In (SOMI)
SD2_C3	7						I	SDFM-2 Channel 3 Clock Input
CANA_RX	14						I	CAN-A Receive
TEST, JTAG, AND RESET								
TCK		60	45	36	36	28	I	JTAG test clock with internal pullup.
TMS		62	47	38	38	30	I/O	JTAG test-mode select (TMS) with internal pullup. This serial control input is clocked into the TAP controller on the rising edge of TCK. This device does not have a TRSTn pin. An external pullup resistor (recommended 2.2 kΩ) on the TMS pin to VDDIO should be placed on the board to keep JTAG in reset during normal operation.

Copyright © 2022 Texas Instruments Incorporated

Table 5-1. Pin Attributes (continued)

SIGNAL NAME	MUX POSITION	100 PZ	80 PN	64 PM	64 PMQ	48 PT	PIN TYPE	DESCRIPTION
XRSn		2	5	3	3	3	I/OD	Device Reset (in) and Watchdog Reset (out). During a power-on condition, this pin is driven low by the device. An external circuit may also drive this pin to assert a device reset. This pin is also driven low by the MCU when a watchdog reset occurs. During watchdog reset, the XRSn pin is driven low for the watchdog reset duration of 512 OSCCLK cycles. A resistor between 2.2 kΩ and 10 kΩ should be placed between XRSn and VDDIO. If a capacitor is placed between XRSn and VSS for noise filtering, it should be 100 nF or smaller. These values will allow the watchdog to properly drive the XRSn pin to VOL within 512 OSCCLK cycles when the watchdog reset is asserted. This pin is an open-drain output with an internal pullup. If this pin is driven by an external device, it should be done using an open-drain device.
POWER AND GROUND								
VDD		4, 46, 71, 87	8, 31, 53, 71	4, 27, 44, 59	4, 27, 44, 59	23, 36, 45		1.2-V Digital Logic Power Pins. See the Power Management Module (PMM) section for usage details.
VDDA		34	26	22	22	18		3.3-V Analog Power Pins. Place a minimum 2.2-µF decoupling capacitor on each pin. See the Power Management Module (PMM) section for usage details.
VDDIO		3, 47, 70, 88	7, 32, 52, 72	28, 43, 60	28, 43, 60	24, 35, 46		3.3-V Digital I/O Power Pins. See the Power Management Module (PMM) section for usage details.
VREGENZ		73			46		I	Internal voltage regulator disable with internal pulldown. Tie low to VSS to enable internal VREG. Tie high to VDDIO to use an external supply. See the Power Management Module (PMM) section for usage details.
VSS		5, 45, 72, 86	9, 30, 55, 70	5, 26, 45, 58	5, 26, 45, 58	22, 37, 44		Digital Ground
VSSA		33	25	21	21	17		Analog Ground

Copyright © 2022 Texas Instruments Incorporated

5.3 Signal Descriptions

5.3.1 Analog Signals

Table 5-2. Analog Signals

SIGNAL NAME	PIN TYPE	DESCRIPTION	GPIO PIN	100 PZ PIN	80 PN PIN	64 PM PIN	64 PMQ PIN	48 PT PIN
A0	I	ADC-A Input 0		23	19	15	15	11
A1	I	ADC-A Input 1		22	18	14	14	10
A2	I	ADC-A Input 2		17	13	9	9	6
A3	I	ADC-A Input 3		18	12	8	8	5
A4	I	ADC-A Input 4		36	27	23	23	19
A5	I	ADC-A Input 5		35	17	13	13	9
A6	I	ADC-A Input 6		14	10	6	6	4
A7	I	ADC-A Input 7		31	23	19	19	15
A8	I	ADC-A Input 8		37	24	20	20	16
A9	I	ADC-A Input 9		38	28	24	24	20
A10	I	ADC-A Input 10		40	29	25	25	21
A11	I	ADC-A Input 11		20	16	12	12	8
A12	I	ADC-A Input 12		28	22	18	18	14
A14	I	ADC-A Input 14		19	15	11	11	
A15	I	ADC-A Input 15			14	10	10	7
AIO224	I	Analog Pin Used For Digital Input 224		17	13	9	9	6
AIO225	I	Analog Pin Used For Digital Input 225		36	27	23	23	19
AIO226	I	Analog Pin Used For Digital Input 226		15	11	7	7	4
AIO227	I	Analog Pin Used For Digital Input 227		38	28	24	24	20
AIO228	I	Analog Pin Used For Digital Input 228		14	10	6	6	4
AIO229	I	Analog Pin Used For Digital Input 229		18				
AIO230	I	Analog Pin Used For Digital Input 230		40	29	25	25	21
AIO231	I	Analog Pin Used For Digital Input 231		23	19	15	15	11
AIO232	I	Analog Pin Used For Digital Input 232		22	18	14	14	10
AIO233	I	Analog Pin Used For Digital Input 233			14	10	10	7
AIO236	I	Analog Pin Used For Digital Input 236		39	28	24	24	20
AIO237	I	Analog Pin Used For Digital Input 237		20	16	12	12	8
AIO238	I	Analog Pin Used For Digital Input 238		28	22	18	18	14
AIO239	I	Analog Pin Used For Digital Input 239		19	15	11	11	
AIO240	I	Analog Pin Used For Digital Input 240		37				
AIO241	I	Analog Pin Used For Digital Input 241			24	20	20	16
AIO242	I	Analog Pin Used For Digital Input 242		16	12	8	8	5
AIO244	I	Analog Pin Used For Digital Input 244		21	17	13	13	9
AIO245	I	Analog Pin Used For Digital Input 245		31	23	19	19	15
AIO247	I	Analog Pin Used For Digital Input 247		42				
AIO248	I	Analog Pin Used For Digital Input 248		29	22	18	18	14
AIO249	I	Analog Pin Used For Digital Input 249		35				
AIO251	I	Analog Pin Used For Digital Input 251		30				

Copyright © 2022 Texas Instruments Incorporated

Table 5-2. Analog Signals (continued)

SIGNAL NAME	PIN TYPE	DESCRIPTION	GPIO PIN	100 PZ PIN	80 PN PIN	64 PM PIN	64 PMQ PIN	48 PT PIN
AIO252	I	Analog Pin Used For Digital Input 252		32				
AIO253	I	Analog Pin Used For Digital Input 253		41				
B0	I	ADC-B Input 0		41	24	20	20	16
B1	I	ADC-B Input 1		40	29	25	25	21
B2	I	ADC-B Input 2		15	11	7	7	4
B3	I	ADC-B Input 3		16	12	8	8	5
B4	I	ADC-B Input 4		39	28	24	24	20
B5	I	ADC-B Input 5		32, 48	33			
B6	I	ADC-B Input 6		17	13	9	9	6
B7	I	ADC-B Input 7		22	18	14	14	10
B8	I	ADC-B Input 8		36	27	23	23	19
B9	I	ADC-B Input 9		18	14	10	10	7
B10	I	ADC-B Input 10		20	16	12	12	8
B11	I	ADC-B Input 11		30, 49	34			
B12	I	ADC-B Input 12		21	17	13	13	9
B14	I	ADC-B Input 14		19	15	11	11	
B15	I	ADC-B Input 15		23	19	15	15	11
C0	I	ADC-C Input 0		20	16	12	12	8
C1	I	ADC-C Input 1		29	22	18	18	14
C2	I	ADC-C Input 2		21	17	13	13	9
C3	I	ADC-C Input 3		31	23	19	19	15
C4	I	ADC-C Input 4		19	15	11	11	
C5	I	ADC-C Input 5		28	12	8	8	5
C6	I	ADC-C Input 6		15	11	7	7	4
C7	I	ADC-C Input 7		18	14	10	10	7
C8	I	ADC-C Input 8		39	28	24	24	20
C9	I	ADC-C Input 9		17	13	9	9	6
C10	I	ADC-C Input 10		40	29	25	25	21
C11	I	ADC-C Input 11		41	24	20	20	16
C14	I	ADC-C Input 14		42	27	23	23	19
C15	I	ADC-C Input 15		23	19	15	15	11
CMP1_HN0	I	CMPSS-1 High Comparator Negative Input 0			14	10	10	7
CMP1_HN1	I	CMPSS-1 High Comparator Negative Input 1		20	16	12	12	8
CMP1_HP0	I	CMPSS-1 High Comparator Positive Input 0		17	13	9	9	6
CMP1_HP1	I	CMPSS-1 High Comparator Positive Input 1		20	16	12	12	8
CMP1_HP2	I	CMPSS-1 High Comparator Positive Input 2		14	10	6	6	4
CMP1_HP3	I	CMPSS-1 High Comparator Positive Input 3			14	10	10	7
CMP1_HP4	I	CMPSS-1 High Comparator Positive Input 4		22	18	14	14	10
CMP1_HP5	I	CMPSS-1 High Comparator Positive Input 5		32, 48	33			
CMP1_LN0	I	CMPSS-1 Low Comparator Negative Input 0			14	10	10	7
CMP1_LN1	I	CMPSS-1 Low Comparator Negative Input 1		20	16	12	12	8
CMP1_LP0	I	CMPSS-1 Low Comparator Positive Input 0		17	13	9	9	6
CMP1_LP1	I	CMPSS-1 Low Comparator Positive Input 1		20	16	12	12	8
CMP1_LP2	I	CMPSS-1 Low Comparator Positive Input 2		14	10	6	6	4
CMP1_LP3	I	CMPSS-1 Low Comparator Positive Input 3			14	10	10	7

Copyright © 2022 Texas Instruments Incorporated

Table 5-2. Analog Signals (continued)

SIGNAL NAME	PIN TYPE	DESCRIPTION	GPIO PIN	100 PZ PIN	80 PN PIN	64 PM PIN	64 PMQ PIN	48 PT PIN
CMP1_LP4	I	CMPSS-1 Low Comparator Positive Input 4		22	18	14	14	10
CMP1_LP5	I	CMPSS-1 Low Comparator Positive Input 5		32, 48	33			
CMP2_HN0	I	CMPSS-2 High Comparator Negative Input 0		40	29	25	25	21
CMP2_HN1	I	CMPSS-2 High Comparator Negative Input 1		28	22	18	18	14
CMP2_HP0	I	CMPSS-2 High Comparator Positive Input 0		36	27	23	23	19
CMP2_HP1	I	CMPSS-2 High Comparator Positive Input 1		28	22	18	18	14
CMP2_HP2	I	CMPSS-2 High Comparator Positive Input 2		38	28	24	24	20
CMP2_HP3	I	CMPSS-2 High Comparator Positive Input 3		40	29	25	25	21
CMP2_HP4	I	CMPSS-2 High Comparator Positive Input 4		41	24	20	20	16
CMP2_HP5	I	CMPSS-2 High Comparator Positive Input 5		35	17	13	13	9
CMP2_LN0	I	CMPSS-2 Low Comparator Negative Input 0		40	29	25	25	21
CMP2_LN1	I	CMPSS-2 Low Comparator Negative Input 1		28	22	18	18	14
CMP2_LP0	I	CMPSS-2 Low Comparator Positive Input 0		36	27	23	23	19
CMP2_LP1	I	CMPSS-2 Low Comparator Positive Input 1		28	22	18	18	14
CMP2_LP2	I	CMPSS-2 Low Comparator Positive Input 2		38	28	24	24	20
CMP2_LP3	I	CMPSS-2 Low Comparator Positive Input 3		40	29	25	25	21
CMP2_LP4	I	CMPSS-2 Low Comparator Positive Input 4		41	24	20	20	16
CMP2_LP5	I	CMPSS-2 Low Comparator Positive Input 5		35	17	13	13	9
CMP3_HN0	I	CMPSS-3 High Comparator Negative Input 0		16	12	8	8	5
CMP3_HN1	I	CMPSS-3 High Comparator Negative Input 1		21	17	13	13	9
CMP3_HP0	I	CMPSS-3 High Comparator Positive Input 0		15	11	7	7	4
CMP3_HP1	I	CMPSS-3 High Comparator Positive Input 1		21	17	13	13	9
CMP3_HP2	I	CMPSS-3 High Comparator Positive Input 2		23	19	15	15	11
CMP3_HP3	I	CMPSS-3 High Comparator Positive Input 3		16	12	8	8	5
CMP3_HP4	I	CMPSS-3 High Comparator Positive Input 4		19	15	11	11	
CMP3_HP5	I	CMPSS-3 High Comparator Positive Input 5		18	12	8	8	5
CMP3_LN0	I	CMPSS-3 Low Comparator Negative Input 0		16	12	8	8	5
CMP3_LN1	I	CMPSS-3 Low Comparator Negative Input 1		21	17	13	13	9
CMP3_LP0	I	CMPSS-3 Low Comparator Positive Input 0		15	11	7	7	4
CMP3_LP1	I	CMPSS-3 Low Comparator Positive Input 1		21	17	13	13	9
CMP3_LP2	I	CMPSS-3 Low Comparator Positive Input 2		23	19	15	15	11
CMP3_LP3	I	CMPSS-3 Low Comparator Positive Input 3		16	12	8	8	5
CMP3_LP4	I	CMPSS-3 Low Comparator Positive Input 4		19	15	11	11	
CMP3_LP5	I	CMPSS-3 Low Comparator Positive Input 5		18	12	8	8	5

Copyright © 2022 Texas Instruments Incorporated

Table 5-2. Analog Signals (continued)

SIGNAL NAME	PIN TYPE	DESCRIPTION	GPIO PIN	100 PZ PIN	80 PN PIN	64 PM PIN	64 PMQ PIN	48 PT PIN
CMP4_HN0	I	CMPSS-4 High Comparator Negative Input 0		42	27	23	23	19
CMP4_HN1	I	CMPSS-4 High Comparator Negative Input 1		31	23	19	19	15
CMP4_HP0	I	CMPSS-4 High Comparator Positive Input 0		39	28	24	24	20
CMP4_HP1	I	CMPSS-4 High Comparator Positive Input 1		31	23	19	19	15
CMP4_HP2	I	CMPSS-4 High Comparator Positive Input 2		29	22	18	18	14
CMP4_HP3	I	CMPSS-4 High Comparator Positive Input 3		42	27	23	23	19
CMP4_HP4	I	CMPSS-4 High Comparator Positive Input 4		37	24	20	20	16
CMP4_HP5	I	CMPSS-4 High Comparator Positive Input 5		30, 49	34			
CMP4_LN0	I	CMPSS-4 Low Comparator Negative Input 0		42	27	23	23	19
CMP4_LN1	I	CMPSS-4 Low Comparator Negative Input 1		31	23	19	19	15
CMP4_LP0	I	CMPSS-4 Low Comparator Positive Input 0		39	28	24	24	20
CMP4_LP1	I	CMPSS-4 Low Comparator Positive Input 1		31	23	19	19	15
CMP4_LP2	I	CMPSS-4 Low Comparator Positive Input 2		29	22	18	18	14
CMP4_LP3	I	CMPSS-4 Low Comparator Positive Input 3		42	27	23	23	19
CMP4_LP4	I	CMPSS-4 Low Comparator Positive Input 4		37	24	20	20	16
CMP4_LP5	I	CMPSS-4 Low Comparator Positive Input 5		30, 49	34			
DACA_OUT	O	Buffered DAC-A Output.		23	19	15	15	11
DACB_OUT	O	Buffered DAC-B Output.		22	18	14	14	10
GPIO20	I/O	General-Purpose Input Output 20		48	33			
GPIO21	I/O	General-Purpose Input Output 21		49	34			
HIC_A0	I	HIC Address 0		14	10	6	6	4
HIC_A1	I	HIC Address 1		15	11	7	7	4
HIC_A2	I	HIC Address 2		16	12	8	8	5
HIC_A3	I	HIC Address 3		17	13	9	9	6
HIC_A4	I	HIC Address 4			14	10	10	7
HIC_A5	I	HIC Address 5		19	15	11	11	
HIC_A6	I	HIC Address 6		20	16	12	12	8
HIC_A7	I	HIC Address 7		21	17	13	13	9
HIC_BASESEL0	I	HIC Base address range select 0		22	18	14	14	10
HIC_BASESEL1	I	HIC Base address range select 1		23	19	15	15	11
HIC_BASESEL2	I	HIC Base address range select 2		40	29	25	25	21
HIC_NBE0	I	HIC Byte enable 0		38	28	24	24	20
HIC_NBE1	I	HIC Byte enable 1		37	24	20	20	16
HIC_NCS	I	HIC Chip select input		28	22	18	18	14
HIC_NOE	O	HIC Output enable for data bus		31	23	19	19	15
HIC_NWE	I	HIC Data Write enable from host		36	27	23	23	19
SD1_C1	I	SDFM-1 Channel 1 Clock Input		23	19	15	15	11
SD1_C2	I	SDFM-1 Channel 2 Clock Input		31	23	19	19	15
SD1_C3	I	SDFM-1 Channel 3 Clock Input		38	28	24	24	20
SD1_C4	I	SDFM-1 Channel 4 Clock Input		40	29	25	25	21
SD1_D1	I	SDFM-1 Channel 1 Data Input		19	15	11	11	
SD1_D2	I	SDFM-1 Channel 2 Data Input		20	16	12	12	8
SD1_D3	I	SDFM-1 Channel 3 Data Input		21	17	13	13	9
SD1_D4	I	SDFM-1 Channel 4 Data Input		22	18	14	14	10
SD2_C1	I	SDFM-2 Channel 1 Clock Input		14, 37	10, 24	20, 6	20, 6	16, 4

Copyright © 2022 Texas Instruments Incorporated

Table 5-2. Analog Signals (continued)

SIGNAL NAME	PIN TYPE	DESCRIPTION	GPIO PIN	100 PZ PIN	80 PN PIN	64 PM PIN	64 PMQ PIN	48 PT PIN
SD2_C2	I	SDFM-2 Channel 2 Clock Input		36	27	23	23	19
SD2_C3	I	SDFM-2 Channel 3 Clock Input		28	22	18	18	14
SD2_C4	I	SDFM-2 Channel 4 Clock Input		48				
SD2_D1	I	SDFM-2 Channel 1 Data Input			14	10	10	7
SD2_D2	I	SDFM-2 Channel 2 Data Input		16	12	8	8	5
SD2_D3	I	SDFM-2 Channel 3 Data Input		17	13	9	9	6
SD2_D4	I	SDFM-2 Channel 4 Data Input		15	11	7	7	4
VDAC	I	Optional external reference voltage for on-chip DACs.		16	12	8	8	5
VREFHI	I	ADC High Reference. In external reference mode, externally drive the high reference voltage onto this pin. In internal reference mode, a voltage is driven onto this pin by the device. In either mode, place at least a 2.2-µF capacitor on this pin. This capacitor should be placed as close to the device as possible between the VREFHI and VREFLO pins.		24, 25	20	16	16	12
VREFLO	I	ADC Low Reference		26, 27	21	17	17	13

Copyright © 2022 Texas Instruments Incorporated

5.3.2 Digital Signals

Table 5-3. Digital Signals

SIGNAL NAME	PIN TYPE	DESCRIPTION	GPIO PIN	100 PZ PIN	80 PN PIN	64 PM PIN	64 PMQ PIN	48 PT PIN
ADCSOCAO	O	ADC Start of Conversion A for External ADC	33, 53, 8	12, 53, 74	38, 58	32, 47	32, 47	25
ADCSOCBO	O	ADC Start of Conversion B for External ADC	10, 32, 54	13, 64, 93	49, 76	40, 63	40, 63	32
AUXCLKIN			29	100	3	1	1	1
CANA_RX	I	CAN-A Receive	12, 18, 3, 30, 33, 35, 49, 5, 53, 59, 61	12, 51, 53, 63, 68, 76, 8, 89, 91, 92, 98	1, 36, 38, 48, 50, 60, 74	30, 32, 39, 41, 49, 61	30, 32, 39, 41, 49, 61	25, 31, 33, 39, 47
CANA_TX	O	CAN-A Transmit	13, 17, 19, 2, 31, 32, 37, 4, 48, 58	50, 55, 61, 64, 67, 69, 7, 75, 77, 99	2, 35, 40, 46, 49, 51, 59, 61	29, 34, 37, 40, 42, 48, 50	29, 34, 37, 40, 42, 48, 50	29, 32, 34, 38, 40
CLB_OUTPUTXBAR1	O	CLB Output X-BAR Output 1	19, 22	69, 83	51, 67	42, 56	42, 56	34
CLB_OUTPUTXBAR2	O	CLB Output X-BAR Output 2	39, 47, 7	6, 84	56, 68	46, 57	57	43
CLB_OUTPUTXBAR3	O	CLB Output X-BAR Output 3	23, 42, 44	81, 85	57, 65, 69	54	54	
CLB_OUTPUTXBAR4	O	CLB Output X-BAR Output 4	10, 43, 45	93	54, 73, 76	63	63	
CLB_OUTPUTXBAR5	O	CLB Output X-BAR Output 5	5, 52, 8	11, 74, 89	58, 74	47, 61	47, 61	47
CLB_OUTPUTXBAR6	O	CLB Output X-BAR Output 6	15, 4, 53	12, 75, 95	59, 78	48	48	38
CLB_OUTPUTXBAR7	O	CLB Output X-BAR Output 7	1, 14, 56	65, 78, 96	62, 79	51	51	41
CLB_OUTPUTXBAR8	O	CLB Output X-BAR Output 8	57, 6	66, 79, 97	63, 80	52, 64	52, 64	42, 48
EPWM1_A	O	ePWM-1 Output A	30	79, 98	1, 63	52	52	42
EPWM1_B	O	ePWM-1 Output B	1, 31	78, 99	2, 62	51	51	41
EPWM2_A	O	ePWM-2 Output A	2, 41	77, 82	61, 66	50, 55	50, 55	40
EPWM2_B	O	ePWM-2 Output B	3, 40	76, 80	60, 64	49, 53	49, 53	39
EPWM3_A	O	ePWM-3 Output A	14, 4	75, 96	59, 79	48	48	38
EPWM3_B	O	ePWM-3 Output B	15, 5	89, 95	74, 78	61	61	47
EPWM4_A	O	ePWM-4 Output A	22, 6	83, 97	67, 80	56, 64	56, 64	48
EPWM4_B	O	ePWM-4 Output B	23, 7	81, 84	65, 68	54, 57	54, 57	43
EPWM5_A	O	ePWM-5 Output A	16, 8	54, 74	39, 58	33, 47	33, 47	26
EPWM5_B	O	ePWM-5 Output B	17, 35, 9	55, 63, 90	40, 48, 75	34, 39, 62	34, 39, 62	31
EPWM6_A	O	ePWM-6 Output A	10, 18	68, 93	50, 76	41, 63	41, 63	33
EPWM6_B	O	ePWM-6 Output B	11, 19	52, 69	37, 51	31, 42	31, 42	34
EPWM7_A	O	ePWM-7 Output A	12, 28	1, 51	36, 4	2, 30	2, 30	2
EPWM7_B	O	ePWM-7 Output B	13, 29	100, 50	3, 35	1, 29	1, 29	1
EPWM8_A	O	ePWM-8 Output A	14, 24	56, 96	41, 79	35	35	27
EPWM8_B	O	ePWM-8 Output B	15, 32	64, 95	49, 78	40	40	32
EQEP1_A	I	eQEP-1 Input A	10, 20, 25, 28, 35, 40, 44, 50, 56, 6	1, 48, 57, 63, 65, 80, 85, 9, 93, 97	33, 4, 42, 48, 64, 69, 76, 80	2, 39, 53, 63, 64	2, 39, 53, 63, 64	2, 31, 48
EQEP1_B	I	eQEP-1 Input B	11, 21, 29, 37, 41, 51, 57, 7	10, 100, 49, 52, 61, 66, 82, 84	3, 34, 37, 46, 66, 68	1, 31, 37, 55, 57	1, 31, 37, 55, 57	1, 29, 43
EQEP1_INDEX	I/O	eQEP-1 Index	13, 17, 23, 31, 39, 43, 53, 59, 9	12, 50, 55, 79, 81, 90, 92, 99	2, 35, 40, 54, 56, 63, 65, 75	29, 34, 46, 52, 54, 62	29, 34, 52, 54, 62	42
EQEP1_STROBE	I/O	eQEP-1 Strobe	12, 16, 22, 30, 42, 52, 58, 8	11, 51, 54, 67, 74, 83, 98	1, 36, 39, 57, 58, 67	30, 33, 47, 56	30, 33, 47, 56	26

Copyright © 2022 Texas Instruments Incorporated

Table 5-3. Digital Signals (continued)

SIGNAL NAME	PIN TYPE	DESCRIPTION	GPIO PIN	100 PZ PIN	80 PN PIN	64 PM PIN	64 PMQ PIN	48 PT PIN
EQEP2_A	I	eQEP-2 Input A	11, 14, 18, 24, 54	13, 52, 56, 68, 96	37, 41, 50, 79	31, 35, 41	31, 35, 41	27, 33
EQEP2_B	I	eQEP-2 Input B	15, 16, 19, 25, 33, 55	43, 53, 54, 57, 69, 95	38, 39, 42, 51, 78	32, 33, 42	32, 33, 42	25, 26, 34
EQEP2_INDEX	I/O	eQEP-2 Index	26, 29, 39, 57	100, 58, 66	3, 43, 56	1, 46	1	1
EQEP2_STROBE	I/O	eQEP-2 Strobe	27, 28, 4, 56	1, 59, 65, 75	4, 44, 59	2, 48	2, 48	2, 38
ERRORSTS	O	Error Status Output. This signal requires an external pulldown.	24, 28, 29, 55	1, 100, 43, 56	3, 4, 41	1, 2, 35	1, 2, 35	1, 2, 27
FSIRXA_CLK	I	FSIRX-A Input Clock	13, 30, 33, 39, 4, 54, 57	13, 50, 53, 66, 75, 79, 98	1, 35, 38, 56, 59, 63	29, 32, 46, 48, 52	29, 32, 48, 52	25, 38, 42
FSIRXA_D0	I	FSIRX-A Primary Data Input	12, 3, 32, 40, 44, 52, 58	11, 51, 64, 67, 76, 80, 85	36, 49, 60, 64, 69	30, 40, 49, 53	30, 40, 49, 53	32, 39
FSIRXA_D1	I	FSIRX-A Optional Additional Data Input	11, 2, 31, 41, 53, 56	12, 52, 65, 77, 82, 99	2, 37, 61, 66	31, 50, 55	31, 50, 55	40
FSITXA_CLK	O	FSITX-A Output Clock	10, 27, 44, 51, 7	10, 59, 84, 85, 93	44, 68, 69, 76	57, 63	57, 63	43
FSITXA_D0	O	FSITX-A Primary Data Output	26, 45, 49, 6, 9	58, 8, 90, 97	43, 73, 75, 80	62, 64	62, 64	48
FSITXA_D1	O	FSITX-A Optional Additional Data Output	25, 46, 5, 50, 6, 8	57, 74, 89, 9, 97	42, 58, 6, 74, 80	47, 61, 64	47, 61, 64	47, 48
FSITXA_TDM_CLK	I	FSITX-A Time Division Multiplexed Clock Input	18, 47, 8	6, 68, 74	50, 58	41, 47	41, 47	33
FSITXA_TDM_D0	I	FSITX-A Time Division Multiplexed Data Input	10, 19	69, 93	51, 76	42, 63	42, 63	34
FSITXA_TDM_D1	I	FSITX-A Time Division Multiplexed Additional Data Input	1, 54, 59	13, 78, 92	62	51	51	41
GPIO0	I/O	General-Purpose Input Output 0		79	63	52	52	42
GPIO1	I/O	General-Purpose Input Output 1	1	78	62	51	51	41
GPIO2	I/O	General-Purpose Input Output 2	2	77	61	50	50	40
GPIO3	I/O	General-Purpose Input Output 3	3	76	60	49	49	39
GPIO4	I/O	General-Purpose Input Output 4	4	75	59	48	48	38
GPIO5	I/O	General-Purpose Input Output 5	5	89	74	61	61	47
GPIO6	I/O	General-Purpose Input Output 6	6	97	80	64	64	48
GPIO7	I/O	General-Purpose Input Output 7	7	84	68	57	57	43
GPIO8	I/O	General-Purpose Input Output 8	8	74	58	47	47	
GPIO9	I/O	General-Purpose Input Output 9	9	90	75	62	62	
GPIO10	I/O	General-Purpose Input Output 10	10	93	76	63	63	
GPIO11	I/O	General-Purpose Input Output 11	11	52	37	31	31	
GPIO12	I/O	General-Purpose Input Output 12	12	51	36	30	30	
GPIO13	I/O	General-Purpose Input Output 13	13	50	35	29	29	
GPIO14	I/O	General-Purpose Input Output 14	14	96	79			
GPIO15	I/O	General-Purpose Input Output 15	15	95	78			
GPIO16	I/O	General-Purpose Input Output 16	16	54	39	33	33	26
GPIO17	I/O	General-Purpose Input Output 17	17	55	40	34	34	
GPIO18	I/O	General-Purpose Input Output 18	18	68	50	41	41	33
GPIO19	I/O	General-Purpose Input Output 19	19	69	51	42	42	34
GPIO20	I/O	General-Purpose Input Output 20	20	48	33			
GPIO21	I/O	General-Purpose Input Output 21	21	49	34			

Copyright © 2022 Texas Instruments Incorporated

Table 5-3. Digital Signals (continued)

SIGNAL NAME	PIN TYPE	DESCRIPTION	GPIO PIN	100 PZ PIN	80 PN PIN	64 PM PIN	64 PMQ PIN	48 PT PIN
GPIO22	I/O	General-Purpose Input Output 22	22	83	67	56	56	
GPIO23	I/O	General-Purpose Input Output 23	23	81	65	54	54	
GPIO24	I/O	General-Purpose Input Output 24	24	56	41	35	35	27
GPIO25	I/O	General-Purpose Input Output 25	25	57	42			
GPIO26	I/O	General-Purpose Input Output 26	26	58	43			
GPIO27	I/O	General-Purpose Input Output 27	27	59	44			
GPIO28	I/O	General-Purpose Input Output 28	28	1	4	2	2	2
GPIO29	I/O	General-Purpose Input Output 29	29	100	3	1	1	1
GPIO30	I/O	General-Purpose Input Output 30	30	98	1			
GPIO31	I/O	General-Purpose Input Output 31	31	99	2			
GPIO32	I/O	General-Purpose Input Output 32	32	64	49	40	40	32
GPIO33	I/O	General-Purpose Input Output 33	33	53	38	32	32	25
GPIO34	I/O	General-Purpose Input Output 34	34	94	77			
GPIO35	I/O	General-Purpose Input Output 35	35	63	48	39	39	31
GPIO37	I/O	General-Purpose Input Output 37	37	61	46	37	37	29
GPIO39	I/O	General-Purpose Input Output 39	39		56	46		
GPIO40	I/O	General-Purpose Input Output 40	40	80	64	53	53	
GPIO41	I/O	General-Purpose Input Output 41	41	82	66	55	55	
GPIO42	I/O	General-Purpose Input Output 42	42		57			
GPIO43	I/O	General-Purpose Input Output 43	43		54			
GPIO44	I/O	General-Purpose Input Output 44	44	85	69			
GPIO45	I/O	General-Purpose Input Output 45	45		73			
GPIO46	I/O	General-Purpose Input Output 46	46		6			
GPIO47	I/O	General-Purpose Input Output 47	47	6				
GPIO48	I/O	General-Purpose Input Output 48	48	7				
GPIO49	I/O	General-Purpose Input Output 49	49	8				
GPIO50	I/O	General-Purpose Input Output 50	50	9				
GPIO51	I/O	General-Purpose Input Output 51	51	10				
GPIO52	I/O	General-Purpose Input Output 52	52	11				
GPIO53	I/O	General-Purpose Input Output 53	53	12				
GPIO54	I/O	General-Purpose Input Output 54	54	13				
GPIO55	I/O	General-Purpose Input Output 55	55	43				
GPIO56	I/O	General-Purpose Input Output 56	56	65				
GPIO57	I/O	General-Purpose Input Output 57	57	66				
GPIO58	I/O	General-Purpose Input Output 58	58	67				
GPIO59	I/O	General-Purpose Input Output 59	59	92				
GPIO60	I/O	General-Purpose Input Output 60	60	44				
GPIO61	I/O	General-Purpose Input Output 61	61	91				
HIC_A0	I	HIC Address 0	55, 60, 8	43, 44, 74	58	47	47	
HIC_A1	I	HIC Address 1	2, 26	58, 77	43, 61	50	50	40

Copyright © 2022 Texas Instruments Incorporated

Table 5-3. Digital Signals (continued)

SIGNAL NAME	PIN TYPE	DESCRIPTION	GPIO PIN	100 PZ PIN	80 PN PIN	64 PM PIN	64 PMQ PIN	48 PT PIN
HIC_A2	I	HIC Address 2	1	78	62	51	51	41
HIC_A3	I	HIC Address 3	23	81	65	54	54	
HIC_A4	I	HIC Address 4	27, 41	59, 82	44, 66	55	55	
HIC_A5	I	HIC Address 5	22	83	67	56	56	
HIC_A6	I	HIC Address 6	42, 47, 7	6, 84	57, 68	57	57	43
HIC_A7	I	HIC Address 7	43, 48, 5	7, 89	54, 74	61	61	47
HIC_BASESEL0	I	HIC Base address range select 0	25, 9	57, 90	42, 75	62	62	
HIC_BASESEL1	I	HIC Base address range select 1		79	63	52	52	42
HIC_BASESEL2	I	HIC Base address range select 2	4	75	59	48	48	38
HIC_D0	I/O	HIC Data 0	26, 33	53, 58	38, 43	32	32	25
HIC_D1	I/O	HIC Data 1	16, 27	54, 59	39, 44	33	33	26
HIC_D2	I/O	HIC Data 2	17, 42, 49	55, 8	40, 57	34	34	
HIC_D3	I/O	HIC Data 3	24, 43, 50	56, 9	41, 54	35	35	27
HIC_D4	I/O	HIC Data 4	3, 5, 57	66, 76, 89	60, 74	49, 61	49, 61	39, 47
HIC_D5	I/O	HIC Data 5	13, 40, 44	50, 80, 85	35, 64, 69	29, 53	29, 53	
HIC_D6	I/O	HIC Data 6	11, 45, 51, 56	10, 52, 65	37, 73	31	31	
HIC_D7	I/O	HIC Data 7	39, 44	79, 85	56, 63, 69	46, 52	52	42
HIC_D8	I/O	HIC Data 8	30, 8	74, 98	1, 58	47	47	
HIC_D9	I/O	HIC Data 9	2, 34	77, 94	61, 77	50	50	40
HIC_D10	I/O	HIC Data 10	1, 31	78, 99	2, 62	51	51	41
HIC_D11	I/O	HIC Data 11	13, 23	50, 81	35, 65	29, 54	29, 54	
HIC_D12	I/O	HIC Data 12	15, 41	82, 95	66, 78	55	55	
HIC_D13	I/O	HIC Data 13	12, 22	51, 83	36, 67	30, 56	30, 56	
HIC_D14	I/O	HIC Data 14	6, 7	84, 97	68, 80	57, 64	57, 64	43, 48
HIC_D15	I/O	HIC Data 15	14, 5	89, 96	74, 79	61	61	47
HIC_INT	O	HIC Device interrupt to host	12, 18, 32	51, 64, 68	36, 49, 50	30, 40, 41	30, 40, 41	32, 33
HIC_NBE0	I	HIC Byte enable 0	11, 19	52, 69	37, 51	31, 42	31, 42	34
HIC_NBE1	I	HIC Byte enable 1	34, 40, 6	80, 94, 97	64, 77, 80	53, 64	53, 64	48
HIC_NCS	I	HIC Chip select input	29	100	3	1	1	1
HIC_NOE	O	HIC Output enable for data bus	28, 3	1, 76	4, 60	2, 49	2, 49	2, 39
HIC_NRDY	O	HIC Ready from device to host	37, 58, 9	61, 67, 90	46, 75	37, 62	37, 62	29
HIC_NWE	I	HIC Data Write enable from host	10, 35, 4, 46, 52	11, 63, 75, 93	48, 59, 6, 76	39, 48, 63	39, 48, 63	31, 38
I2CA_SCL	I/OD	I2C-A Open-Drain Bidirectional Clock	1, 18, 27, 33, 37, 43, 57, 8	53, 59, 61, 66, 68, 74, 78	38, 44, 46, 50, 54, 58, 62	32, 37, 41, 47, 51	32, 37, 41, 47, 51	25, 29, 33, 41
I2CA_SDA	I/OD	I2C-A Open-Drain Bidirectional Data	10, 19, 26, 32, 35, 42, 56	58, 63, 64, 65, 69, 79, 93	43, 48, 49, 51, 57, 63, 76	39, 40, 42, 52, 63	39, 40, 42, 52, 63	31, 32, 34, 42
I2CB_SCL	I/OD	I2C-B Open-Drain Bidirectional Clock	15, 29, 3, 51, 9	10, 100, 76, 90, 95	3, 60, 75, 78	1, 49, 62	1, 49, 62	1, 39
I2CB_SDA	I/OD	I2C-B Open-Drain Bidirectional Data	14, 2, 28, 34, 50	1, 77, 9, 94, 96	4, 61, 77, 79	2, 50	2, 50	2, 40
LINA_RX	I	LIN-A Receive	23, 29, 33, 35, 42, 47, 49, 59	100, 53, 6, 63, 8, 81, 92	3, 38, 48, 57, 65	1, 32, 39, 54	1, 32, 39, 54	1, 25, 31

Copyright © 2022 Texas Instruments Incorporated

Table 5-3. Digital Signals (continued)

SIGNAL NAME	PIN TYPE	DESCRIPTION	GPIO PIN	100 PZ PIN	80 PN PIN	64 PM PIN	64 PMQ PIN	48 PT PIN
LINA_TX	O	LIN-A Transmit	22, 28, 32, 37, 46, 58	1, 61, 64, 67, 83	4, 46, 49, 6, 67	2, 37, 40, 56	2, 37, 40, 56	2, 29, 32
LINB_RX	I	LIN-B Receive	11, 13, 15, 19, 23, 41, 55, 9	43, 50, 52, 69, 81, 82, 90, 95	35, 37, 51, 65, 66, 75, 78	29, 31, 42, 54, 55, 62	29, 31, 42, 54, 55, 62	34
LINB_TX	O	LIN-B Transmit	10, 12, 14, 18, 22, 24, 40, 44, 54	13, 51, 56, 68, 80, 83, 85, 93, 96	36, 41, 50, 64, 67, 69, 76, 79	30, 35, 41, 53, 56, 63	30, 35, 41, 53, 56, 63	27, 33
MCAN_RX	I	CAN/CAN FD Receive	12, 21, 30, 39, 47, 5, 51, 57, 61	10, 49, 51, 6, 66, 79, 89, 91, 98	1, 34, 36, 56, 63, 74	30, 46, 52, 61	30, 52, 61	42, 47
MCAN_TX	O	CAN/CAN FD Transmit	1, 13, 20, 31, 4, 46, 50, 56, 60	44, 48, 50, 65, 75, 78, 9, 99	2, 33, 35, 59, 6, 62	29, 48, 51	29, 48, 51	38, 41
OUTPUTXBAR1	O	Output X-BAR Output 1	2, 24, 34, 58	56, 67, 77, 94	41, 61, 77	35, 50	35, 50	27, 40
OUTPUTXBAR2	O	Output X-BAR Output 2	25, 3, 37, 54, 59	13, 57, 61, 76, 92	42, 46, 60	37, 49	37, 49	29, 39
OUTPUTXBAR3	O	Output X-BAR Output 3	14, 26, 4, 48, 5, 55, 60	43, 44, 58, 7, 75, 89, 96	43, 59, 74, 79	48, 61	48, 61	38, 47
OUTPUTXBAR4	O	Output X-BAR Output 4	15, 27, 33, 49, 6, 61	53, 59, 8, 91, 95, 97	38, 44, 78, 80	32, 64	32, 64	25, 48
OUTPUTXBAR5	O	Output X-BAR Output 5	28, 42, 7	1, 84	4, 57, 68	2, 57	2, 57	2, 43
OUTPUTXBAR6	O	Output X-BAR Output 6	29, 43, 9	100, 90	3, 54, 75	1, 62	1, 62	1
OUTPUTXBAR7	O	Output X-BAR Output 7	11, 16, 30, 44	52, 54, 85, 98	1, 37, 39, 69	31, 33	31, 33	26
OUTPUTXBAR8	O	Output X-BAR Output 8	17, 31, 45	55, 99	2, 40, 73	34	34	
PMBUSA_ALERT	I/OD	PMBus-A Open-Drain Bidirectional Alert Signal	13, 19, 27, 37, 43, 45	50, 59, 61, 69	35, 44, 46, 51, 54, 73	29, 37, 42	29, 37, 42	29, 34
PMBUSA_CTL	I/O	PMBus-A Control Signal - Slave Input/Master Output	12, 18, 26, 35, 42, 44	51, 58, 63, 68, 85	36, 43, 48, 50, 57, 69	30, 39, 41	30, 39, 41	31, 33
PMBUSA_SCL	I/OD	PMBus-A Open-Drain Bidirectional Clock	15, 16, 24, 3, 35, 41, 47	54, 56, 6, 63, 76, 82, 95	39, 41, 48, 60, 66, 78	33, 35, 39, 49, 55	33, 35, 39, 49, 55	26, 27, 31, 39
PMBUSA_SDA	I/OD	PMBus-A Open-Drain Bidirectional Data	14, 17, 2, 25, 32, 34, 40, 44, 46, 48	55, 57, 64, 7, 77, 80, 85, 94, 96	40, 42, 49, 6, 61, 64, 69, 77, 79	34, 40, 50, 53	34, 40, 50, 53	32, 40
SCIA_RX	I	SCI-A Receive Data	17, 25, 28, 3, 35, 49, 9	1, 55, 57, 63, 76, 8, 90	4, 40, 42, 48, 60, 75	2, 34, 39, 49, 62	2, 34, 39, 49, 62	2, 31, 39
SCIA_TX	O	SCI-A Transmit Data	16, 2, 24, 29, 37, 48, 8	100, 54, 56, 61, 7, 74, 77	3, 39, 41, 46, 58, 61	1, 33, 35, 37, 47, 50	1, 33, 35, 37, 47, 50	1, 26, 27, 29, 40
SCIB_RX	I	SCI-B Receive Data	11, 13, 15, 19, 23, 41, 57	50, 52, 66, 69, 81, 82, 95	35, 37, 51, 65, 66, 78	29, 31, 42, 54, 55	29, 31, 42, 54, 55	34
SCIB_TX	O	SCI-B Transmit Data	10, 12, 14, 18, 22, 40, 56, 9	51, 65, 68, 80, 83, 90, 93, 96	36, 50, 64, 67, 75, 76, 79	30, 41, 53, 56, 62, 63	30, 41, 53, 56, 62, 63	33
SD1_C1	I	SDFM-1 Channel 1 Clock Input	17, 33, 49, 53	12, 53, 55, 8	38, 40	32, 34	32, 34	25
SD1_C2	I	SDFM-1 Channel 2 Clock Input	19, 33, 51, 54	10, 13, 53, 69	38, 51	32, 42	32, 42	25, 34
SD1_C3	I	SDFM-1 Channel 3 Clock Input	21, 53, 55	12, 43, 49	34			
SD1_C4	I	SDFM-1 Channel 4 Clock Input	23, 55, 56	43, 65, 81	65	54	54	
SD1_D1	I	SDFM-1 Channel 1 Data Input	16, 48	54, 7	39	33	33	26
SD1_D2	I	SDFM-1 Channel 2 Data Input	18, 32, 50	64, 68, 9	49, 50	40, 41	40, 41	32, 33
SD1_D3	I	SDFM-1 Channel 3 Data Input	20, 52	11, 48	33			
SD1_D4	I	SDFM-1 Channel 4 Data Input	22, 54	13, 83	67	56	56	
SD2_C1	I	SDFM-2 Channel 1 Clock Input	25, 35, 57	57, 63, 66	42, 48	39	39	31

Copyright © 2022 Texas Instruments Incorporated

Table 5-3. Digital Signals (continued)

SIGNAL NAME	PIN TYPE	DESCRIPTION	GPIO PIN	100 PZ PIN	80 PN PIN	64 PM PIN	64 PMQ PIN	48 PT PIN
SD2_C2	I	SDFM-2 Channel 2 Clock Input	27, 58, 59	59, 67, 92	44			
SD2_C3	I	SDFM-2 Channel 3 Clock Input	29, 45, 59, 61	100, 91, 92	3, 73	1	1	1
SD2_C4	I	SDFM-2 Channel 4 Clock Input	31, 46, 60	44, 99	2, 6			
SD2_D1	I	SDFM-2 Channel 1 Data Input	24, 49, 56	56, 65, 8	41	35	35	27
SD2_D2	I	SDFM-2 Channel 2 Data Input	26, 50, 58	58, 67, 9	43			
SD2_D3	I	SDFM-2 Channel 3 Data Input	28, 43, 51, 60	1, 10, 44	4, 54	2	2	2
SD2_D4	I	SDFM-2 Channel 4 Data Input	30, 47, 52	11, 6, 98	1			
SPIA_CLK	I/O	SPI-A Clock	12, 18, 3, 56, 9	51, 65, 68, 76, 90	36, 50, 60, 75	30, 41, 49, 62	30, 41, 49, 62	33, 39
SPIA_SIMO	I/O	SPI-A Slave In, Master Out (SIMO)	11, 16, 2, 54, 8	13, 52, 54, 74, 77	37, 39, 58, 61	31, 33, 47, 50	31, 33, 47, 50	26, 40
SPIA_SOMI	I/O	SPI-A Slave Out, Master In (SOMI)	1, 10, 13, 17, 55	43, 50, 55, 78, 93	35, 40, 62, 76	29, 34, 51, 63	29, 34, 51, 63	41
SPIA_STE	I/O	SPI-A Slave Transmit Enable (STE)	11, 19, 5, 57	52, 66, 69, 79, 89	37, 51, 63, 74	31, 42, 52, 61	31, 42, 52, 61	34, 42, 47
SPIB_CLK	I/O	SPI-B Clock	14, 22, 26, 28, 32, 4, 52, 58	1, 11, 58, 64, 67, 75, 83, 96	4, 43, 49, 59, 67, 79	2, 40, 48, 56	2, 40, 48, 56	2, 32, 38
SPIB_SIMO	I/O	SPI-B Slave In, Master Out (SIMO)	20, 24, 30, 40, 50, 56, 60, 7	44, 48, 56, 65, 80, 84, 9, 98	1, 33, 41, 64, 68	35, 53, 57	35, 53, 57	27, 43
SPIB_SOMI	I/O	SPI-B Slave Out, Master In (SOMI)	16, 21, 25, 31, 41, 51, 57, 6, 61	10, 49, 54, 57, 66, 82, 91, 97, 99	2, 34, 39, 42, 66, 80	33, 55, 64	33, 55, 64	26, 48
SPIB_STE	I/O	SPI-B Slave Transmit Enable (STE)	15, 23, 27, 29, 33, 53, 59	100, 12, 53, 59, 81, 92, 95	3, 38, 44, 65, 78	1, 32, 54	1, 32, 54	1, 25
SYNCOUT	O	External ePWM Synchronization Pulse	39, 52, 6	11, 97	56, 80	46, 64	64	48
TDI	I	JTAG Test Data Input (TDI) - TDI is the default mux selection for the pin. The internal pullup is disabled by default. The internal pullup should be enabled or an external pullup added on the board if this pin is used as JTAG TDI to avoid a floating input.	35	63	48	39	39	31
TDO	O	JTAG Test Data Output (TDO) - TDO is the default mux selection for the pin. The internal pullup is disabled by default. The TDO function will tristate when there is no JTAG activity, leaving this pin floating; the internal pullup should be enabled or an external pullup added on the board to avoid a floating GPIO input.	37	61	46	37	37	29
X1	I/O	Crystal oscillator input or single-ended clock input. The device initialization software must configure this pin before the crystal oscillator is enabled. To use this oscillator, a quartz crystal circuit must be connected to X1 and X2. This pin can also be used to feed a single-ended 3.3-V level clock. See the XTAL section for usage details.	19	69	51	42	42	34
X2	I/O	Crystal oscillator output.	18	68	50	41	41	33
XCLKOUT	O	External Clock Output. This pin outputs a divided-down version of a chosen clock signal from within the device.	16, 18	54, 68	39, 50	33, 41	33, 41	26, 33

Copyright © 2022 Texas Instruments Incorporated

5.3.3 Power and Ground

Table 5-4. Power and Ground

SIGNAL NAME	PIN TYPE	DESCRIPTION	GPIO PIN	100 PZ PIN	80 PN PIN	64 PM PIN	64 PMQ PIN	48 PT PIN
VDD		1.2-V Digital Logic Power Pins. See the Power Management Module (PMM) section for usage details.		4, 46, 71, 87	31, 53, 71, 8	27, 4, 44, 59	27, 4, 44, 59	23, 36, 45
VDDA		3.3-V Analog Power Pins. Place a minimum 2.2-µF decoupling capacitor on each pin. See the Power Management Module (PMM) section for usage details.		34	26	22	22	18
VDDIO		3.3-V Digital I/O Power Pins. See the Power Management Module (PMM) section for usage details.		3, 47, 70, 88	32, 52, 7, 72	28, 43, 60	28, 43, 60	24, 35, 46
VREGENZ	I	Internal voltage regulator disable with internal pulldown. Tie low to VSS to enable internal VREG. Tie high to VDDIO to use an external supply. See the Power Management Module (PMM) section for usage details.		73			46	
VSS		Digital Ground		45, 5, 72, 86	30, 55, 70, 9	26, 45, 5, 58	26, 45, 5, 58	22, 37, 44
VSSA		Analog Ground		33	25	21	21	17

5.3.4 Test, JTAG, and Reset

Table 5-5. Test, JTAG, and Reset

SIGNAL NAME	PIN TYPE	DESCRIPTION	GPIO	100 PZ	80 PN	64 PM	64 PMQ	48 PT
TCK	I	JTAG test clock with internal pullup.		60	45	36	36	28
TMS	I/O	JTAG test-mode select (TMS) with internal pullup. This serial control input is clocked into the TAP controller on the rising edge of TCK. This device does not have a TRSTn pin. An external pullup resistor (recommended 2.2 kΩ) on the TMS pin to VDDIO should be placed on the board to keep JTAG in reset during normal operation.		62	47	38	38	30
X1	I/O	Crystal oscillator input or single-ended clock input. The device initialization software must configure this pin before the crystal oscillator is enabled. To use this oscillator, a quartz crystal circuit must be connected to X1 and X2. This pin can also be used to feed a single-ended 3.3-V level clock.		69	51	42	42	34
X2	I/O	Crystal oscillator output.		68	50	41	41	33

Copyright © 2022 Texas Instruments Incorporated

Table 5-5. Test, JTAG, and Reset (continued)

SIGNAL NAME	PIN TYPE	DESCRIPTION	GPIO	100 PZ	80 PN	64 PM	64 PMQ	48 PT
XRSn	I/OD	Device Reset (in) and Watchdog Reset (out). During a power-on condition, this pin is driven low by the device. An external circuit may also drive this pin to assert a device reset. This pin is also driven low by the MCU when a watchdog reset occurs. During watchdog reset, the XRSn pin is driven low for the watchdog reset duration of 512 OSCCLK cycles. A resistor between 2.2 kΩ and 10 kΩ should be placed between XRSn and VDDIO. If a capacitor is placed between XRSn and VSS for noise filtering, it should be 100 nF or smaller. These values will allow the watchdog to properly drive the XRSn pin to VOL within 512 OSCCLK cycles when the watchdog reset is asserted. This pin is an open-drain output with an internal pullup.		2	5	3	3	3

Copyright © 2022 Texas Instruments Incorporated

5.4 Pin Multiplexing

5.4.1 GPIO Muxed Pins

Table 5-6 lists the GPIO muxed pins. The default mode for each GPIO pin is the GPIO function, except GPIO35 and GPIO37, which default to TDI and TDO, respectively. Secondary functions can be selected by setting both the GPyGMUXn.GPIOz and GPyMUXn.GPIOz register bits. The GPyGMUXn register should be configured before the GPyMUXn to avoid transient pulses on GPIOs from alternate mux selections. Columns that are not shown and blank cells are reserved GPIO Mux settings. GPIO ALT functions cannot be configured with the GPyMUXn and GPyGMUXn registers. These are special functions that need to be configured from the module.

Note

GPIO36 and GPIO38 do not exist on this device. GPIO62 to GPIO63 exist but are not pinned out on any packages. Boot ROM enables pullups on GPIO62 to GPIO63. For more details, see Section 5.5.

Copyright © 2022 Texas Instruments Incorporated

5.4.1.1 GPIO Muxed Pins

Table 5-6. GPIO Muxed Pins

0, 4, 8, 12	1	2	3	5	6	7	9	10	11	13	14	15	ALT
GPIO0	EPWM1_A				I2CA_SDA	SPIA_STE	FSIRXA_CLK	MCAN_RX	CLB_OUTPUTXBAR8	EQEP1_INDEX	HIC_D7	HIC_BASESEL1	
GPIO1	EPWM1_B				I2CA_SCL	SPIA_SOMI		MCAN_TX	CLB_OUTPUTXBAR7	HIC_A2	FSITXA_TDM_D1	HIC_D10	
GPIO2	EPWM2_A			OUTPUTXBAR1	PMBUSA_SDA	SPIA_SIMO	SCIA_TX	FSIRXA_D1	I2CB_SDA	HIC_A1	CANA_TX	HIC_D9	
GPIO3	EPWM2_B	OUTPUTXBAR2		OUTPUTXBAR2	PMBUSA_SCL	SPIA_CLK	SCIA_RX	FSIRXA_D0	I2CB_SCL	HIC_NOE	CANA_RX	HIC_D4	
GPIO4	EPWM3_A		MCAN_TX	OUTPUTXBAR3	CANA_TX	SPIB_CLK	EQEP2_STROBE	FSIRXA_CLK	CLB_OUTPUTXBAR6	HIC_BASESEL2		HIC_NWE	
GPIO5	EPWM3_B		OUTPUTXBAR3	MCAN_RX	CANA_RX	SPIA_STE	FSITXA_D1	CLB_OUTPUTXBAR5		HIC_A7	HIC_D4	HIC_D15	
GPIO6	EPWM4_A	OUTPUTXBAR4	SYNCOUT	EQEP1_A		SPIB_SOMI	FSITXA_D0		FSITXA_D1	HIC_NBE1	CLB_OUTPUTXBAR8	HIC_D14	
GPIO7	EPWM4_B		OUTPUTXBAR5	EQEP1_B		SPIB_SIMO	FSITXA_CLK	CLB_OUTPUTXBAR2		HIC_A6		HIC_D14	
GPIO8	EPWM5_A		ADCSOCAO	EQEP1_STROBE	SCIA_TX	SPIA_SIMO	I2CA_SCL	FSITXA_D1	CLB_OUTPUTXBAR5	HIC_A0	FSITXA_TDM_CLK	HIC_D8	
GPIO9	EPWM5_B	SCIB_TX	OUTPUTXBAR6	EQEP1_INDEX	SCIA_RX	SPIA_CLK		FSITXA_D0	LINB_RX	HIC_BASESEL0	I2CB_SCL	HIC_NRDY	
GPIO10	EPWM6_A		ADCSOCBO	EQEP1_A	SCIB_TX	SPIA_SOMI	I2CA_SDA	FSITXA_CLK	LINB_TX	HIC_NWE	FSITXA_TDM_D0	CLB_OUTPUTXBAR4	
GPIO11	EPWM6_B		OUTPUTXBAR7	EQEP1_B	SCIB_RX	SPIA_STE	FSIRXA_D1	LINB_RX	EQEP2_A	SPIA_SIMO	HIC_D6	HIC_NBE0	
GPIO12	EPWM7_A		MCAN_RX	EQEP1_STROBE	SCIB_TX	PMBUSA_CTL	FSIRXA_D0	LINB_TX	SPIA_CLK	CANA_RX	HIC_D13	HIC_INT	
GPIO13	EPWM7_B		MCAN_TX	EQEP1_INDEX	SCIB_RX	PMBUSA_ALERT	FSIRXA_CLK	LINB_RX	SPIA_SOMI	CANA_TX	HIC_D11	HIC_D5	
GPIO14	EPWM8_A	SCIB_TX		I2CB_SDA	OUTPUTXBAR3	PMBUSA_SDA	SPIB_CLK	EQEP2_A	LINB_TX	EPWM3_A	CLB_OUTPUTXBAR7	HIC_D15	
GPIO15	EPWM8_B	SCIB_RX		I2CB_SCL	OUTPUTXBAR4	PMBUSA_SCL	SPIB_STE	EQEP2_B	LINB_RX	EPWM3_B	CLB_OUTPUTXBAR6	HIC_D12	
GPIO16	SPIA_SIMO		OUTPUTXBAR7	EPWM5_A	SCIA_TX	SD1_D1	EQEP1_STROBE	PMBUSA_SCL	XCLKOUT	EQEP2_B	SPIB_SOMI	HIC_D1	
GPIO17	SPIA_SOMI		OUTPUTXBAR8	EPWM5_B	SCIA_RX	SD1_C1	EQEP1_INDEX	PMBUSA_SDA	CANA_TX			HIC_D2	
GPIO18	SPIA_CLK	SCIB_TX	CANA_RX	EPWM6_A	I2CA_SCL	SD1_D2	EQEP2_A	PMBUSA_CTL	XCLKOUT	LINB_TX	FSITXA_TDM_CLK	HIC_INT	X2
GPIO19	SPIA_STE	SCIB_RX	CANA_TX	EPWM6_B	I2CA_SDA	SD1_C2	EQEP2_B	PMBUSA_ALERT	CLB_OUTPUTXBAR1	LINB_RX	FSITXA_TDM_D0	HIC_NBE0	X1
GPIO20	EQEP1_A				SPIB_SIMO	SD1_D3	MCAN_TX						
GPIO21	EQEP1_B				SPIB_SOMI	SD1_C3	MCAN_RX						
GPIO22	EQEP1_STROBE		SCIB_TX		SPIB_CLK	SD1_D4	LINA_TX	CLB_OUTPUTXBAR1	LINB_TX	HIC_A5	EPWM4_A	HIC_D13	
GPIO23	EQEP1_INDEX		SCIB_RX		SPIB_STE	SD1_C4	LINA_RX	CLB_OUTPUTXBAR3	LINB_RX	HIC_A3	EPWM4_B	HIC_D11	
GPIO24	OUTPUTXBAR1	EQEP2_A		EPWM8_A	SPIB_SIMO	SD2_D1	LINB_TX	PMBUSA_SCL	SCIA_TX	ERRORSTS		HIC_D3	
GPIO25	OUTPUTXBAR2	EQEP2_B		EQEP1_A	SPIB_SOMI	SD2_C1	FSITXA_D1	PMBUSA_SDA	SCIA_RX		HIC_BASESEL0		
GPIO26	OUTPUTXBAR3	EQEP2_INDEX		OUTPUTXBAR3	SPIB_CLK	SD2_D2	FSITXA_D0	PMBUSA_CTL	I2CA_SDA		HIC_D0	HIC_A1	

Copyright © 2022 Texas Instruments Incorporated

Table 5-6. GPIO Muxed Pins (continued)

0, 4, 8, 12	1	2	3	5	6	7	9	10	11	13	14	15	ALT
GPIO27	OUTPUTXBAR4	EQEP2_STROBE		OUTPUTXBAR4	SPIB_STE	SD2_C2	FSITXA_CLK	PMBUSA_ALERT	I2CA_SCL		HIC_D1	HIC_A4	
GPIO28	SCIA_RX		EPWM7_A	OUTPUTXBAR5	EQEP1_A	SD2_D3	EQEP2_STROBE	LINA_TX	SPIB_CLK	ERRORSTS	I2CB_SDA	HIC_NOE	
GPIO29	SCIA_TX		EPWM7_B	OUTPUTXBAR6	EQEP1_B	SD2_C3	EQEP2_INDEX	LINA_RX	SPIB_STE	ERRORSTS	I2CB_SCL	HIC_NCS	AUXCLKIN
GPIO30	CANA_RX		SPIB_SIMO	OUTPUTXBAR7	EQEP1_STROBE	SD2_D4	FSIRXA_CLK	MCAN_RX	EPWM1_A		HIC_D8		
GPIO31	CANA_TX		SPIB_SOMI	OUTPUTXBAR8	EQEP1_INDEX	SD2_C4	FSIRXA_D1	MCAN_TX	EPWM1_B		HIC_D10		
GPIO32	I2CA_SDA		SPIB_CLK	EPWM8_B	LINA_TX	SD1_D2	FSIRXA_D0	CANA_TX	PMBUSA_SDA	ADCSOCBO		HIC_INT	
GPIO33	I2CA_SCL		SPIB_STE	OUTPUTXBAR4	LINA_RX	SD1_C2	FSIRXA_CLK	CANA_RX	EQEP2_B	ADCSOCAO	SD1_C1	HIC_D0	
GPIO34	OUTPUTXBAR1				PMBUSA_SDA					HIC_NBE1	I2CB_SDA	HIC_D9	
GPIO35	SCIA_RX		I2CA_SDA	CANA_RX	PMBUSA_SCL	LINA_RX	EQEP1_A	PMBUSA_CTL	EPWM5_B	SD2_C1	HIC_NWE	TDI	
GPIO37	OUTPUTXBAR2		I2CA_SCL	SCIA_TX	CANA_TX	LINA_TX	EQEP1_B	PMBUSA_ALERT			HIC_NRDY	TDO	
GPIO39					MCAN_RX	FSIRXA_CLK	EQEP2_INDEX		CLB_OUTPUTXBAR2	SYNCOUT	EQEP1_INDEX	HIC_D7	
GPIO40	SPIB_SIMO			EPWM2_B	PMBUSA_SDA	FSIRXA_D0	SCIB_TX	EQEP1_A	LINB_TX		HIC_NBE1	HIC_D5	
GPIO41				EPWM2_A	PMBUSA_SCL	FSIRXA_D1	SCIB_RX	EQEP1_B	LINB_RX	HIC_A4	SPIB_SOMI	HIC_D12	
GPIO42		LINA_RX	OUTPUTXBAR5	PMBUSA_CTL	I2CA_SDA			EQEP1_STROBE	CLB_OUTPUTXBAR3		HIC_D2	HIC_A6	
GPIO43			OUTPUTXBAR6	PMBUSA_ALERT	I2CA_SCL		PMBUSA_ALERT	EQEP1_INDEX	CLB_OUTPUTXBAR4	SD2_D3	HIC_D3	HIC_A7	
GPIO44			OUTPUTXBAR7	EQEP1_A	PMBUSA_SDA	FSITXA_CLK	PMBUSA_CTL	CLB_OUTPUTXBAR3	FSIRXA_D0	HIC_D7	LINB_TX	HIC_D5	
GPIO45			OUTPUTXBAR8			FSITXA_D0	PMBUSA_ALERT	CLB_OUTPUTXBAR4		SD2_C3		HIC_D6	
GPIO46			LINA_TX	MCAN_TX		FSITXA_D1	PMBUSA_SDA			SD2_C4		HIC_NWE	
GPIO47			LINA_RX	MCAN_RX		CLB_OUTPUTXBAR2	PMBUSA_SCL			SD2_D4	FSITXA_TDM_CLK	HIC_A6	
GPIO48	OUTPUTXBAR3		CANA_TX		SCIA_TX	SD1_D1	PMBUSA_SDA					HIC_A7	
GPIO49	OUTPUTXBAR4		CANA_RX		SCIA_RX	SD1_C1	LINA_RX			SD2_D1	FSITXA_D0	HIC_D2	
GPIO50	EQEP1_A			MCAN_TX	SPIB_SIMO	SD1_D2	I2CB_SDA			SD2_D2	FSITXA_D1	HIC_D3	
GPIO51	EQEP1_B			MCAN_RX	SPIB_SOMI	SD1_C2	I2CB_SCL			SD2_D3	FSITXA_CLK	HIC_D6	
GPIO52	EQEP1_STROBE			CLB_OUTPUTXBAR5	SPIB_CLK	SD1_D3	SYNCOUT			SD2_D4	FSIRXA_D0	HIC_NWE	
GPIO53	EQEP1_INDEX			CLB_OUTPUTXBAR6	SPIB_STE	SD1_C3	ADCSOCAO	CANA_RX		SD1_C1	FSIRXA_D1		
GPIO54	SPIA_SIMO			EQEP2_A	OUTPUTXBAR2	SD1_D4	ADCSOCBO	LINB_TX		SD1_C2	FSIRXA_CLK	FSITXA_TDM_D1	
GPIO55	SPIA_SOMI			EQEP2_B	OUTPUTXBAR3	SD1_C4	ERRORSTS	LINB_RX		SD1_C3		HIC_A0	
GPIO56	SPIA_CLK	CLB_OUTPUTXBAR7	MCAN_TX	EQEP2_STROBE	SCIB_TX	SD2_D1	SPIB_SIMO	I2CA_SDA	EQEP1_A	SD1_C4	FSIRXA_D1	HIC_D6	
GPIO57	SPIA_STE	CLB_OUTPUTXBAR8	MCAN_RX	EQEP2_INDEX	SCIB_RX	SD2_C1	SPIB_SOMI	I2CA_SCL	EQEP1_B		FSIRXA_CLK	HIC_D4	

Copyright © 2022 Texas Instruments Incorporated

Table 5-6. GPIO Muxed Pins (continued)

0, 4, 8, 12	1	2	3	5	6	7	9	10	11	13	14	15	ALT
GPIO58				OUTPUTXBAR1	SPIB_CLK	SD2_D2	LINA_TX	CANA_TX	EQEP1_STROBE	SD2_C2	FSIRXA_D0	HIC_NRDY	
GPIO59				OUTPUTXBAR2	SPIB_STE	SD2_C2	LINA_RX	CANA_RX	EQEP1_INDEX	SD2_C3	FSITXA_TDM_D1		
GPIO60			MCAN_TX	OUTPUTXBAR3	SPIB_SIMO	SD2_D3				SD2_C4		HIC_A0	
GPIO61			MCAN_RX	OUTPUTXBAR4	SPIB_SOMI	SD2_C3					CANA_RX		
AIO224		SD2_D3										HIC_A3	
AIO225		SD2_C2										HIC_NWE	
AIO226		SD2_D4										HIC_A1	
AIO227		SD1_C3										HIC_NBE0	
AIO228		SD2_C1										HIC_A0	
AIO229													
AIO230		SD1_C4										HIC_BASESEL2	
AIO231		SD1_C1										HIC_BASESEL1	
AIO232		SD1_D4										HIC_BASESEL0	
AIO233		SD2_D1										HIC_A4	
AIO236													
AIO237		SD1_D2										HIC_A6	
AIO238		SD2_C3										HIC_NCS	
AIO239		SD1_D1										HIC_A5	
AIO240		SD2_C1										HIC_NBE1	
AIO241		SD2_C1										HIC_NBE1	
AIO242		SD2_D2										HIC_A2	
AIO244		SD1_D3										HIC_A7	
AIO245		SD1_C2										HIC_NOE	
AIO247													
AIO248													
AIO249													
AIO251													
AIO252		SD2_C4											
AIO253													

Copyright © 2022 Texas Instruments Incorporated

5.4.2 Digital Inputs on ADC Pins (AIOs)

GPIOs on port H (GPIO224–GPIO253) are multiplexed with analog pins. These are also referred to as AIOs. These pins can only function in input mode. By default, these pins will function as analog pins and the GPIOs are in a high-Z state. The GPHAMSEL register is used to configure these pins for digital or analog operation.

Note

If digital signals with sharp edges (high dv/dt) are connected to the AIOs, cross-talk can occur with adjacent analog signals. The user should therefore limit the edge rate of signals connected to AIOs if adjacent channels are being used for analog functions.

5.4.3 Digital Inputs and Outputs on ADC Pins (AGPIOs)

Some GPIOs on this device are multiplexed with analog pins. These are also referred to as AGPIOs. Unlike AIOs, AGPIOs have full input and output capability. This device has two GPIOs (GPIO20, GPIO21) that offer this feature on the 100-Pin PZ and 80-Pin PN packages.

100-Pin PZ: On this package, there are dedicated pins for B5 (pin 32) and B11 (pin 30) which respectively also have AIO252 and AIO251 functionality. In addition, GPIO20 (pin 48) and GPIO21 (pin 49) are also available as B5 and B11 respectively. Since B5 and B11 are dedicated pins on this package, it is recommended to use them instead of the ones on GPIO20/21.

80-Pin PN: On this package, GPIO20 (pin 33) and GPIO21 (pin 34) are also available as B5 and B11 respectively. There are no dedicated pin for B5 and B11.

By default the AGPIOs are not connected and have to be configured. Table 5-7 truth table shows how to configure the AGPIOs using B5 (pin 32) and GPIO20 (pin 48) on the 100-Pin PZ as an example.

Table 5-7. AGPIO Configuration

AGPIOCTRLA.bit.GPIO20	GPAAMSEL.bit.GPIO20	GPHAMSEL.bit.GPIO252	B5 CONNECTED TO			GPIO20 CONNECTED TO		
			ADC	GPIO20	AIO252	ADC	GPIO20	AIO252
0	0	1	Yes	-	-	-	Yes	-
0	1	1	Yes	-	-	-	-	-
1	0	1	Yes	-	-	-	Yes	-
1	1	1	-	-	-	Yes	-	-
0	0	0	Yes	-	Yes	-	Yes	-
0	1	0	Yes	-	Yes	-	-	-
1	0	0	Yes	-	Yes	-	Yes	-
1	1	0	-	-	Yes	Yes	-	-

Note

If digital signals with sharp edges (high dv/dt) are connected to the AGPIOs, cross-talk can occur with adjacent analog signals. The user should therefore limit the edge rate of signals connected to AGPIOs if adjacent channels are being used for analog functions.

5.4.4 GPIO Input X-BAR

The Input X-BAR is used to route signals from a GPIO to many different IP blocks such as the ADCs, eCAPs, ePWMs, and external interrupts (see Figure 5-6). Table 5-8 lists the input X-BAR destinations.

Copyright © 2022 Texas Instruments Incorporated

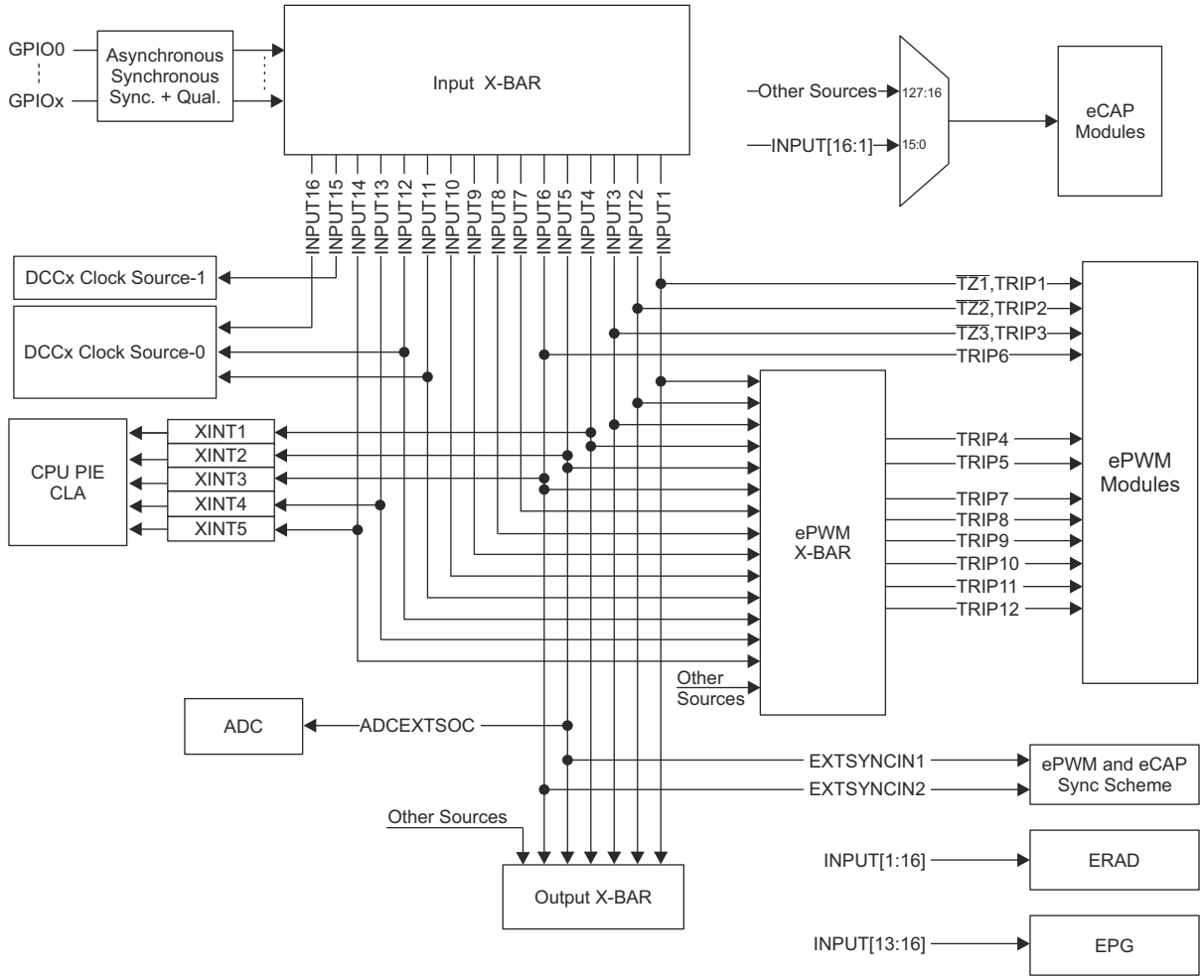

Figure 5-6. Input X-BAR

Table 5-8. Input X-BAR Destinations

INPUT	1	2	3	4	5	6	7	8	9	10	11	12	13	14	15	16
ECAP / HRCAP	Yes	Yes	Yes	Yes	Yes	Yes	Yes	Yes	Yes	Yes	Yes	Yes	Yes	Yes	Yes	Yes
EPWM X-BAR	Yes	Yes	Yes	Yes	Yes	Yes	Yes	Yes	Yes	Yes	Yes	Yes	Yes	Yes		
CLB X-BAR	Yes	Yes	Yes	Yes	Yes	Yes	Yes	Yes	Yes	Yes	Yes	Yes	Yes	Yes		
OUTPUT X-BAR	Yes	Yes	Yes	Yes	Yes	Yes										
CPU XINT				XINT1	XINT2	XINT3							XINT4	XINT5		
EPWM TRIP	TZ1, TRIP1	TZ2, TRIP2	TZ3, TRIP3			TRIP6										
ADC START OF CONVERSION					ADCEX TSOC											
EPWM / ECAP SYNC					EXTSY NCIN1	EXTSY NCIN2										
DCCx											CLK 0	CLK 0			CLK1	CLK0
EPG													EPG1 IN1	EPG1 IN2	EPG1 IN3	EPG1 IN4
ERAD	Yes	Yes	Yes	Yes	Yes	Yes	Yes	Yes	Yes	Yes	Yes	Yes	Yes	Yes	Yes	Yes

Copyright © 2022 Texas Instruments Incorporated

5.4.5 GPIO Output X-BAR, CLB X-BAR, CLB Output X-BAR, and ePWM X-BAR

The Output X-BAR has eight outputs that can be selected on the GPIO mux as OUTPUTXBARx. The CLB X-BAR has eight outputs that are connected to the CLB global mux as AUXSIGx. The CLB Output X-BAR has eight outputs that can be selected on the GPIO mux as CLB_OUTPUTXBARx. The ePWM X-BAR has eight outputs that are connected to the TRIPx inputs of the ePWM. The sources for the Output X-BAR, CLB X-BAR, CLB Output X-BAR, and ePWM X-BAR are shown in Figure 5-7.

Copyright © 2022 Texas Instruments Incorporated

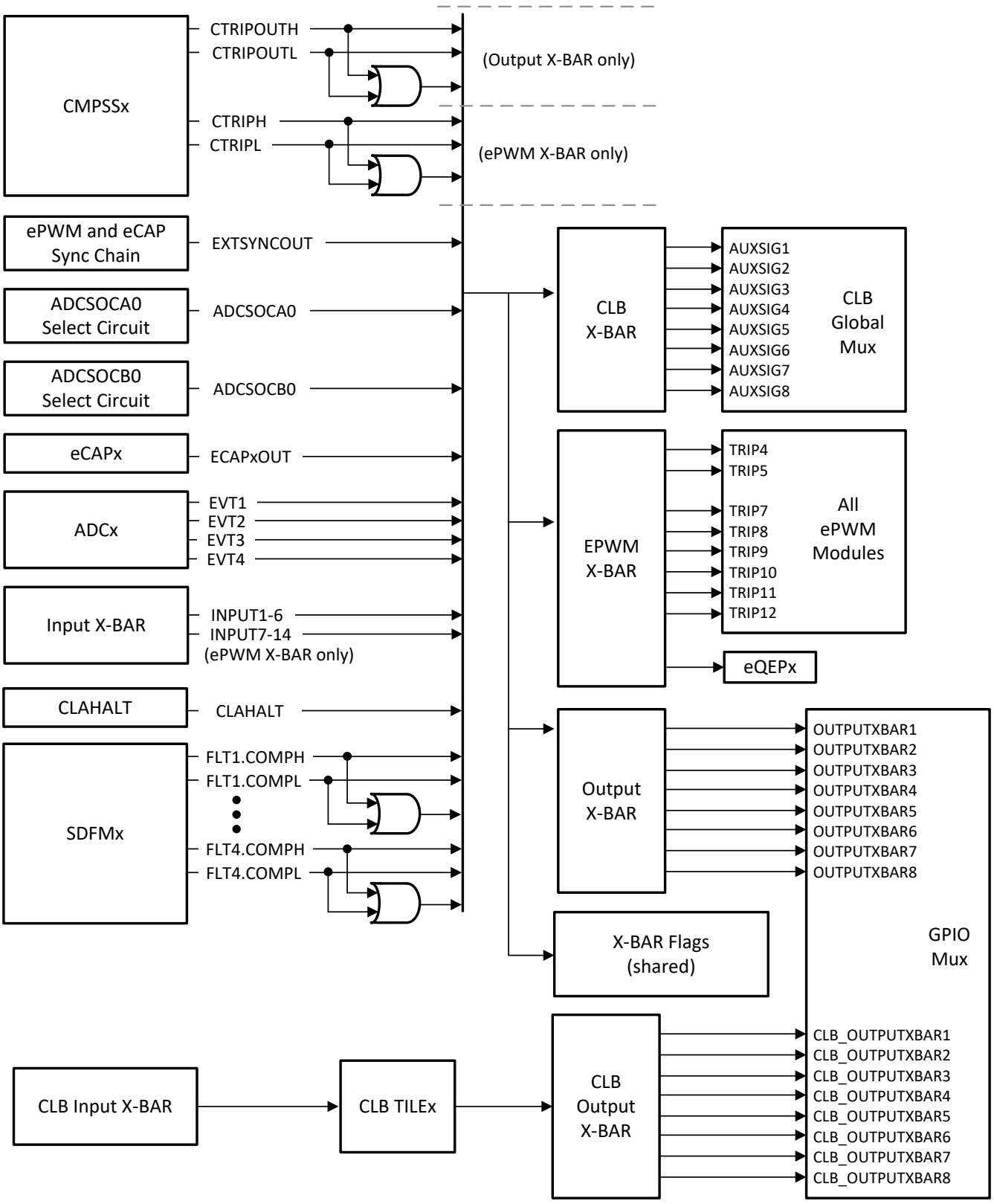

Figure 5-7. Output X-BAR, CLB X-BAR, CLB Output X-BAR, and ePWM X-BAR Sources

Copyright © 2022 Texas Instruments Incorporated

5.5 Pins With Internal Pullup and Pulldown

Some pins on the device have internal pullups or pulldowns. Table 5-9 lists the pull direction and when it is active. The pullups on GPIO pins are disabled by default and can be enabled through software. To avoid any floating unbonded inputs, the Boot ROM will enable internal pullups on GPIO pins that are not bonded out in a particular package. Other pins noted in Table 5-9 with pullups and pulldowns are always on and cannot be disabled.

Table 5-9. Pins With Internal Pullup and Pulldown

PIN	RESET (XRSn = 0)	DEVICE BOOT	APPLICATION
GPIOx	Pullup disabled	Pullup disabled(1)	Application defined
GPIO35/TDI	Pullup disabled		Application defined
GPIO37/TDO	Pullup disabled		Application defined
AGPIOx	Pullup disabled	Pullup disabled	Application defined
TCK	Pullup active		
TMS	Pullup active		
XRSn	Pullup active		
Other pins (including AIOs)	No pullup or pulldown present		

(1) Pins not bonded out in a given package will have the internal pullups enabled by the Boot ROM.

Copyright © 2022 Texas Instruments Incorporated

5.6 Connections for Unused Pins

For applications that do not need to use all functions of the device, Table 5-10 lists acceptable conditioning for any unused pins. When multiple options are listed in Table 5-10, any option is acceptable. Pins not listed in Table 5-10 must be connected according to Section 5.

Table 5-10. Connections for Unused Pins

SIGNAL NAME	ACCEPTABLE PRACTICE
ANALOG	
VREFHI	Tie to VDDA (applies only if ADC is not used in the application)
VREFLO	Tie to VSSA
Analog input pins with DACx_OUT	• No Connect • Tie to VSSA through 4.7-kΩ or larger resistor
Analog input pins (except DACx_OUT)	• No Connect • Tie to VSSA • Tie to VSSA through resistor
Analog input pins (shared with GPIOs)(1)	• No connection (digital input mode with internal pullup enabled) • No connection (digital output mode with internal pullup disabled) • Pullup or pulldown resistor (any value resistor, digital input mode, and with internal pullup disabled)
DIGITAL	
GPIOx	• No connection (input mode with internal pullup enabled) • No connection (output mode with internal pullup disabled) • Pullup or pulldown resistor (any value resistor, input mode, and with internal pullup disabled)
GPIO35/TDI	When TDI mux option is selected (default), the GPIO is in Input mode. • Internal pullup enabled • External pullup resistor
GPIO37/TDO	When TDO mux option is selected (default), the GPIO is in Output mode only during JTAG activity; otherwise, it is in a tri-state condition. The pin must be biased to avoid extra current on the input buffer. • Internal pullup enabled • External pullup resistor
TCK	• No Connect • Pullup resistor
TMS	Pullup resistor
GPIO19/X1	Turn XTAL off and: • Input mode with internal pullup enabled • Input mode with external pullup or pulldown resistor • Output mode with internal pullup disabled
GPIO18/X2	Turn XTAL off and: • Input mode with internal pullup enabled • Input mode with external pullup or pulldown resistor • Output mode with internal pullup disabled
POWER AND GROUND	
VDD	All VDD pins must be connected per Section 5.3. Pins should not be used to bias any external circuits.
VDDA	If a dedicated analog supply is not used, tie to VDDIO.
VDDIO	All VDDIO pins must be connected per Section 5.3.
VSS	All VSS pins must be connected to board ground.

Copyright © 2022 Texas Instruments Incorporated

Table 5-10. Connections for Unused Pins (continued)

SIGNAL NAME	ACCEPTABLE PRACTICE
VSSA	If an analog ground is not used, tie to VSS.

(1) AGPIO pins share analog and digital functionality. The actions here only apply if these pins are also not being used for analog functions.

Copyright © 2022 Texas Instruments Incorporated

6 Specifications

Stresses beyond those listed under *Absolute Maximum Ratings* may cause permanent damage to the device. These are stress ratings only and functional operation of the device beyond the *Recommended Operating Conditions* is not implied. Exposure to absolute-maximum-rated conditions for extended periods may affect device reliability. All voltage values are with respect to VSS, unless otherwise noted.

6.1 Absolute Maximum Ratings

over operating free-air temperature range (unless otherwise noted)

		MIN	MAX	UNIT
Supply voltage	VDDIO with respect to VSS	–0.3	4.6	V
	VDDA with respect to VSSA	–0.3	4.6	
	VDD with respect to VSS	–0.3	1.5	
Input voltage	V_{IN} (3.3 V)	–0.3	4.6	V
Output voltage	V_O	–0.3	4.6	V
Input clamp current	Digital/analog input (per pin), I_{IK} (V_{IN} < VSS/VSSA or V_{IN} > VDDIO/VDDA)(2)	–20	20	mA
	Total for all inputs, $I_{IKTOTAL}$ (V_{IN} < VSS/VSSA or V_{IN} > VDDIO/VDDA)	–20	20	
Output current	Digital output (per pin), I_{OUT}	–20	20	mA
Free-Air temperature	T_A	–40	125	°C
Operating junction temperature	T_J	–40	150	°C
Storage temperature(1)	T_{stg}	–65	150	°C

(1) Long-term high-temperature storage or extended use at maximum temperature conditions may result in a reduction of overall device life. For additional information, see the *Semiconductor and IC Package Thermal Metrics Application Report*.
(2) Continuous clamp current per pin is ±2 mA. Do not operate in this condition continuously as V_{DDIO}/V_{DDA} voltage may internally rise and impact other electrical specifications.

6.2 ESD Ratings – Commercial

			VALUE	UNIT
F280039C, F280039, F280037C, F280037, F280034, F280033 in 100-pin PZ package				
$V_{(ESD)}$	Electrostatic discharge (ESD)	Human-body model (HBM), per ANSI/ESDA/JEDEC JS-001(1)	±2000	V
		Charged-device model (CDM), per ANSI/ESDA/JEDEC JS-002(2)	±500	
F280039C, F280039, F280037C, F280037, F280034, F280033 in 80-pin PN package				
$V_{(ESD)}$	Electrostatic discharge (ESD)	Human-body model (HBM), per ANSI/ESDA/JEDEC JS-001(1)	±2000	V
		Charged-device model (CDM), per ANSI/ESDA/JEDEC JS-002(2)	±500	
F280039C, F280039, F280037C, F280037, F280034, F280033 in 64-pin PM package				
$V_{(ESD)}$	Electrostatic discharge (ESD)	Human-body model (HBM), per ANSI/ESDA/JEDEC JS-001(1)	±2000	V
		Charged-device model (CDM), per ANSI/ESDA/JEDEC JS-002(2)	±500	
F280037C, F280037, F280034, F280033 in 48-pin PT package				
$V_{(ESD)}$	Electrostatic discharge (ESD)	Human-body model (HBM), per ANSI/ESDA/JEDEC JS-001(1)	±2000	V
		Charged-device model (CDM), per ANSI/ESDA/JEDEC JS-002(2)	±500	

(1) JEDEC document JEP155 states that 500-V HBM allows safe manufacturing with a standard ESD control process.
(2) JEDEC document JEP157 states that 250-V CDM allows safe manufacturing with a standard ESD control process.

Copyright © 2022 Texas Instruments Incorporated

6.3 ESD Ratings – Automotive

				VALUE	UNIT
F280039C-Q1, F280039-Q1, F280037C-Q1, F280037-Q1 in 100-pin PZ package					
$V_{(ESD)}$	Electrostatic discharge	Human body model (HBM), per AEC Q100-002[1]	All pins	±2000	V
		Charged device model (CDM), per AEC Q100-011	All pins	±500	
			Corner pins on 100-pin PZ: 1, 25, 26, 50, 51, 75, 76, 100	±750	
F280038C-Q1, F280038-Q1, F280036C-Q1, F280036-Q1 in 64-pin PM package					
$V_{(ESD)}$	Electrostatic discharge	Human body model (HBM), per AEC Q100-002[1]	All pins	±2000	V
		Charged device model (CDM), per AEC Q100-011	All pins	±500	
			Corner pins on 64-pin PM: 1, 16, 17, 32, 33, 48, 49, 64	±750	
F280037C-Q1, F280037-Q1, F280034-Q1 in 48-pin PT package					
$V_{(ESD)}$	Electrostatic discharge	Human body model (HBM), per AEC Q100-002[1]	All pins	±2000	V
		Charged device model (CDM), per AEC Q100-011	All pins	±500	
			Corner pins on 48-pin PT: 1, 12, 13, 24, 25, 36, 37, 48	±750	

(1) AEC Q100-002 indicates HBM stressing is done in accordance with the ANSI/ESDA/JEDEC JS-001 specification.

6.4 Recommended Operating Conditions

		MIN	NOM	MAX	UNIT
Device supply voltage, VDDIO and VDDA	Internal BOR enabled[3]	$V_{BOR-VDDIO}$(MAX) + $V_{BOR-VDDIO-GB}$ [2]	3.3	3.63	V
	Internal BOR disabled	2.8	3.3	3.63	
Device ground, VSS			0		V
Analog ground, VSSA			0		V
SR_{SUPPLY}	Supply ramp rate[4]				
V_{IN}	Digital input voltage	VSS – 0.3		VDDIO + 0.3	V
	Analog input voltage	VSSA – 0.3		VDDA + 0.3	V
Junction temperature, T_J [1]		–40		150	°C
Free-Air temperature, T_A		–40		125	°C

(1) Operation above T_J = 105°C for extended duration will reduce the lifetime of the device. See *Calculating Useful Lifetimes of Embedded Processors* for more information.
(2) See the *Power Management Module (PMM)* section.
(3) Internal BOR is enabled by default.
(4) See the *Power Management Module Operating Conditions* table.

Copyright © 2022 Texas Instruments Incorporated

6.5 Power Consumption Summary

Current values listed in this section are representative for the test conditions given and not the absolute maximum possible. The actual device currents in an application will vary with application code and pin configurations. Section 6.5.1 lists the system current consumption values. Section 6.5.2 lists the system current consumption with VREG disabled.

6.5.1 System Current Consumption

over operating free-air temperature range (unless otherwise noted).
TYP : V_{nom}, 30°C

PARAMETER		TEST CONDITIONS	MIN	TYP	MAX	UNIT
OPERATING MODE						
I_{DDIO}	VDDIO current consumption during operational usage	This is an estimation of current for a typical heavily loaded application. Actual currents will vary depending on system activity, I/O electrical loading and switching frequency. This includes Core supply current with Internal Vreg Enabled. - CPU is running from RAM - Flash is powered up - X1/X2 crystal is powered up - PLL is enabled, SYSCLK=Max Device frequency - Analog modules are powered up - Outputs are static without DC Load - Inputs are static high or low		80	108	mA
I_{DDA}	VDDA current consumption during operational usage			8	17.5	mA
IDLE MODE						
I_{DDIO}	VDDIO current consumption while device is in Idle mode	- CPU is in IDLE mode - Flash is powered down - PLL is Enabled, SYSCLK=Max Device Frequency, CPUCLK is gated - X1/X2 crystal is powered up - Analog Modules are powered down - Outputs are static without DC Load - Inputs are static high or low		30	58	mA
I_{DDA}	VDDA current consumption while device is in Idle mode			0.01	0.1	mA
STANDBY MODE						
I_{DDIO}	VDDIO current consumption while device is in Standby mode	- CPU is in STANDBY mode - Flash is powered down - PLL is Enabled, SYSCLK & CPUCLK are gated - X1/X2 crystal is powered down - Analog Modules are powered down - Outputs are static without DC Load - Inputs are static high or low		16.5	41	mA
I_{DDA}	VDDA current consumption while device is in Standby mode			0.01	0.1	mA

Copyright © 2022 Texas Instruments Incorporated

6.5.1 System Current Consumption (continued)

over operating free-air temperature range (unless otherwise noted).
TYP : V_{nom}, 30°C

PARAMETER		TEST CONDITIONS	MIN	TYP	MAX	UNIT
HALT MODE						
I_{DDIO}	VDDIO current consumption while device is in Halt mode	- CPU is in HALT mode - Flash is powered down - PLL is Disabled, SYSCLK & CPUCLK are gated - X1/X2 crystal is powered down - Analog Modules are powered down - Outputs are static without DC Load - Inputs are static high or low		12.5	36	mA
I_{DDA}	VDDA current consumption while device is in Halt mode			0.01	0.1	mA
FLASH ERASE/PROGRAM						
I_{DDIO}	VDDIO current consumption during Erase/Program cycle(1)	- CPU is running from RAM - Flash going through continuous Program/Erase operation - PLL is enabled, SYSCLK at 120 MHz. - Peripheral clocks are turned OFF. - X1/X2 crystal is powered up - Analog is powered down - Outputs are static without DC Load - Inputs are static high or low		72	106	mA
I_{DDA}	VDDA current consumption during Erase/Program cycle			0.1	2.5	mA
RESET MODE						
I_{DDIO}	VDDIO current consumption while reset is active(2)			5.8		mA
I_{DDA}	VDDA current consumption while reset is active(2)			0.1		mA

(1) Brownout events during flash programming can corrupt flash data and permanently lock the device. Programming environments using alternate power sources (such as a USB programmer) must be capable of supplying the rated current for the device and other system components with sufficient margin to avoid supply brownout conditions.
(2) This is the current consumption while reset is active, that is XRSn is low.

Copyright © 2022 Texas Instruments Incorporated

6.5.2 System Current Consumption (VREG Disable - External Supply)

over operating free-air temperature range (unless otherwise noted).
TYP : V_{nom}, 30℃

PARAMETER		TEST CONDITIONS	MIN	TYP	MAX	UNIT
OPERATING MODE						
I_{DD}	VDD current consumption during operational usage	This is an estimation of current for a typical heavily loaded application. Actual currents will vary depending on system activity, I/O electrical loading and switching frequency. - CPU is running from RAM - Flash is powered up - X1/X2 crystal is powered up - PLL is enabled, SYSCLK=Max Device frequency - Analog modules are powered up - Outputs are static without DC Load - Inputs are static high or low		73	103.5	mA
I_{DDIO}	VDDIO current consumption during operational usage			4	4.7	mA
I_{DDA}	VDDA current consumption during operational usage			8	17.5	mA
IDLE MODE						
I_{DD}	VDD current consumption while device is in Idle mode	- CPU is in IDLE mode - Flash is powered down - PLL is Enabled, SYSCLK=Max Device Frequency, CPUCLK is gated - X1/X2 crystal is powered up - Analog Modules are powered down - Outputs are static without DC Load - Inputs are static high or low		25	48	mA
I_{DDIO}	VDDIO current consumption while device is in Idle mode			1.7	2.2	mA
I_{DDA}	VDDA current consumption while device is in Idle mode			0.01	0.1	mA
STANDBY MODE						
I_{DD}	VDD current consumption while device is in Standby mode	- CPU is in STANDBY mode - Flash is powered down - PLL is Enabled, SYSCLK & CPUCLK are gated - X1/X2 crystal is powered down - Analog Modules are powered down - Outputs are static without DC Load - Inputs are static high or low		11.6	35	mA
I_{DDIO}	VDDIO current consumption while device is in Standby mode			1.7	2.3	mA
I_{DDA}	VDDA current consumption while device is in Standby mode			0.01	0.1	mA
HALT MODE						
I_{DD}	VDD current consumption while device is in Halt mode	- CPU is in HALT mode - Flash is powered down - PLL is Disabled, SYSCLK & CPUCLK are gated - X1/X2 crystal is powered down - Analog Modules are powered down - Outputs are static without DC Load - Inputs are static high or low		8.5	31	mA
I_{DDIO}	VDDIO current consumption while device is in Halt mode			0.8	1.2	mA
I_{DDA}	VDDA current consumption while device is in Halt mode			0.01	0.1	mA

Copyright © 2022 Texas Instruments Incorporated

6.5.2 System Current Consumption (VREG Disable - External Supply) (continued)

over operating free-air temperature range (unless otherwise noted).
TYP : V_{nom}, 30°C

PARAMETER		TEST CONDITIONS	MIN	TYP	MAX	UNIT
FLASH ERASE/PROGRAM						
I_{DD}	VDD Current consumption during Erase/Program cycle(1)	- CPU is running from RAM - Flash going through continuous Program/Erase operation - PLL is enabled, SYSCLK at 120 MHz. - Peripheral clocks are turned OFF. - X1/X2 crystal is powered up - Analog is powered down - Outputs are static without DC Load - Inputs are static high or low		41	60.5	mA
I_{DDIO}	VDDIO Current consumption during Erase/Program cycle(1)			31	45.5	mA
I_{DDA}	VDDA Current consumption during Erase/Program cycle			0.1	2.5	mA
RESET MODE						
I_{DD}	VDD current consumption while reset is active(2)			3.3		mA
I_{DDIO}	VDDIO current consumption while reset is active(2)			2.2		mA
I_{DDA}	VDDA current consumption while reset is active(2)			0.1		mA

(1) Brownout events during flash programming can corrupt flash data and permanently lock the device. Programming environments using alternate power sources (such as a USB programmer) must be capable of supplying the rated current for the device and other system components with sufficient margin to avoid supply brownout conditions.
(2) This is the current consumption while reset is active, that is XRSn is low.

Copyright © 2022 Texas Instruments Incorporated

6.5.3 Operating Mode Test Description

Section 6.5.1 and Section 6.5.4.1 list the current consumption values for the operational mode of the device. The operational mode provides an estimation of what an application might encounter. The test condition for these measurements has the following properties:

- Code is executing from RAM.
- FLASH is read and kept in active state.
- No external components are driven by I/O pins.
- All peripherals have clocks enabled.
- The CPU is actively executing code.
- All analog peripherals are powered up. ADCs and DACs are periodically converting.

Copyright © 2022 Texas Instruments Incorporated

6.5.4 Reducing Current Consumption

The F28003x devices provide some methods to reduce the device current consumption:

- One of the two low-power modes—IDLE or STANDBY—could be entered during idle periods in the application.
- The flash module may be powered down if the code is run from RAM.
- Disable the pullups on pins that assume an output function.
- Each peripheral has an individual clock-enable bit (PCLKCRx). Reduced current consumption may be achieved by turning off the clock to any peripheral that is not used in a given application. Section 6.5.4.1 lists the typical current reduction that may be achieved by disabling the clocks using the PCLKCRx register.
- To realize the lowest VDDA current consumption in an LPM, see the Analog-to-Digital Converter (ADC) chapter of the *TMS320F28003x Real-Time Microcontrollers Technical Reference Manual* to ensure each module is powered down as well.

6.5.4.1 Typical Current Reduction per Disabled Peripheral

PERIPHERAL	I_{DD} CURRENT REDUCTION (mA)
ADC(1)	0.73
CLA	0.56
CLA BGCRC	0.42
CLB	1.41
CMPSS(1)	0.33
CPU BGCRC	0.25
CPU TIMER	0.04
GPDAC	0.12
DCAN	1.28
DCC	0.12
DMA	0.57
eCAP1 and eCAP2	0.08
eCAP3(2)	0.29
ePWM1 to ePWM4(3)	0.95
ePWM5 to ePWM8	0.78
ERAD	1.56
eQEP	0.1
FSI RX	0.34
FSI TX	0.27
HIC	0.17
I2C	0.26
LIN	0.35
MCAN (CAN FD)	1.01
PMBUS	0.28
SCI	0.16
SDFM	1.83
SPI	0.08

(1) This current represents the current drawn by the digital portion of the each module.
(2) eCAP3 can also be configured as HRCAP.
(3) ePWM1 to ePWM4 can also be configured as HRPWM.

Copyright © 2022 Texas Instruments Incorporated

6.6 Electrical Characteristics

over recommended operating conditions (unless otherwise noted)

PARAMETER			TEST CONDITIONS	MIN	TYP	MAX	UNIT
Digital and Analog IO							
V_{OH}	High-level output voltage		I_{OH} = I_{OH} MIN	VDDIO * 0.8			V
			I_{OH} = –100 µA	VDDIO – 0.2			
V_{OL}	Low-level output voltage		I_{OL} = I_{OL} MAX			0.4	V
			I_{OL} = 100 µA			0.2	
I_{OH}	High-level output source current for all output pins			–4			mA
I_{OL}	Low-level output sink current for all output pins					4	mA
R_{OH}	High-level output impedance for all output pins				70		Ω
R_{OL}	Low-level output impedance for all output pins				70		Ω
V_{IH}	High-level input voltage			2.0			V
V_{IL}	Low-level input voltage					0.8	V
$V_{HYSTERESIS}$	Input hysteresis			125			mV
$I_{PULLDOWN}$	Input current	Pins with pulldown	VDDIO = 3.3 V V_{IN} = VDDIO		120		µA
I_{PULLUP}	Input current	Digital inputs with pullup enabled(1)	VDDIO = 3.3 V V_{IN} = 0 V		160		µA
I_{LEAK}	Pin leakage	Digital inputs	Pullups and outputs disabled 0 V ≤ V_{IN} ≤ VDDIO			0.1	µA
		Analog pins (except ADCINB3/VDAC)	Analog drivers disabled 0 V ≤ V_{IN} ≤ VDDA			0.1	
		ADCINB3/VDAC			0.2	4.4	
C_I	Input capacitance	Digital inputs			2		pF
		Analog pins(2)					
VREG, POR and BOR							
VREG, POR, BOR(3)							

(1) See Pins With Internal Pullup and Pulldown table for a list of pins with a pullup or pulldown.
(2) The analog pins are specified separately; see the Per-Channel Parasitic Capacitance tables that are in the ADC Input Model section.
(3) See the *Power Management Module (PMM)* section.

Copyright © 2022 Texas Instruments Incorporated

6.7 Thermal Resistance Characteristics for PZ Package

		°C/W(1)	AIR FLOW (lfm)(2)
$R\Theta_{JC}$	Junction-to-case thermal resistance	7.6	N/A
$R\Theta_{JB}$	Junction-to-board thermal resistance	24.2	N/A
$R\Theta_{JA}$ (High k PCB)	Junction-to-free air thermal resistance	46.1	0
$R\Theta_{JMA}$	Junction-to-moving air thermal resistance	37.3	150
		34.8	250
		32.6	500
Psi_{JT}	Junction-to-package top	0.2	0
		0.4	150
		0.4	250
		0.6	500
Psi_{JB}	Junction-to-board	23.8	0
		22.8	150
		22.4	250
		21.9	500

(1) These values are based on a JEDEC-defined 2S2P system (with the exception of the Theta JC [$R\Theta_{JC}$] value, which is based on a JEDEC-defined 1S0P system) and will change based on environment as well as application. For more information, see these EIA/JEDEC standards:

- JESD51-2, *Integrated Circuits Thermal Test Method Environmental Conditions - Natural Convection (Still Air)*
- JESD51-3, *Low Effective Thermal Conductivity Test Board for Leaded Surface Mount Packages*
- JESD51-7, *High Effective Thermal Conductivity Test Board for Leaded Surface Mount Packages*
- JESD51-9, *Test Boards for Area Array Surface Mount Package Thermal Measurements*

(2) lfm = linear feet per minute

Copyright © 2022 Texas Instruments Incorporated

6.8 Thermal Resistance Characteristics for PN Package

		°C/W(1)	AIR FLOW (lfm)(2)
$R\Theta_{JC}$	Junction-to-case thermal resistance	14.2	N/A
$R\Theta_{JB}$	Junction-to-board thermal resistance	21.9	N/A
$R\Theta_{JA}$ (High k PCB)	Junction-to-free air thermal resistance	49.9	0
		38.3	150
		36.7	250
		34.4	500
Psi_{JT}	Junction-to-package top	0.8	0
		1.18	150
		1.34	250
		1.62	500
Psi_{JB}	Junction-to-board	21.6	0
		20.7	150
		20.5	250
		20.1	500

(1) These values are based on a JEDEC-defined 2S2P system (with the exception of the Theta JC [$R\Theta_{JC}$] value, which is based on a JEDEC-defined 1S0P system) and will change based on environment as well as application. For more information, see these EIA/JEDEC standards:

- JESD51-2, *Integrated Circuits Thermal Test Method Environmental Conditions - Natural Convection (Still Air)*
- JESD51-3, *Low Effective Thermal Conductivity Test Board for Leaded Surface Mount Packages*
- JESD51-7, *High Effective Thermal Conductivity Test Board for Leaded Surface Mount Packages*
- JESD51-9, *Test Boards for Area Array Surface Mount Package Thermal Measurements*

(2) lfm = linear feet per minute

Copyright © 2022 Texas Instruments Incorporated

6.9 Thermal Resistance Characteristics for PM Package

		°C/W(1)	AIR FLOW (lfm)(2)
$R\Theta_{JC}$	Junction-to-case thermal resistance	12.4	N/A
$R\Theta_{JB}$	Junction-to-board thermal resistance	25.6	N/A
$R\Theta_{JA}$ (High k PCB)	Junction-to-free air thermal resistance	51.8	0
$R\Theta_{JMA}$	Junction-to-moving air thermal resistance	42.2	150
		39.4	250
		36.5	500
Psi_{JT}	Junction-to-package top	0.5	0
		0.9	150
		1.1	250
		1.4	500
Psi_{JB}	Junction-to-board	25.1	0
		23.8	150
		23.4	250
		22.7	500

(1) These values are based on a JEDEC-defined 2S2P system (with the exception of the Theta JC [$R\Theta_{JC}$] value, which is based on a JEDEC-defined 1S0P system) and will change based on environment as well as application. For more information, see these EIA/JEDEC standards:

- JESD51-2, *Integrated Circuits Thermal Test Method Environmental Conditions - Natural Convection (Still Air)*
- JESD51-3, *Low Effective Thermal Conductivity Test Board for Leaded Surface Mount Packages*
- JESD51-7, *High Effective Thermal Conductivity Test Board for Leaded Surface Mount Packages*
- JESD51-9, *Test Boards for Area Array Surface Mount Package Thermal Measurements*

(2) lfm = linear feet per minute

Copyright © 2022 Texas Instruments Incorporated

6.10 Thermal Resistance Characteristics for PT Package

		°C/W[1]	AIR FLOW (lfm)[2]
$R\Theta_{JC}$	Junction-to-case thermal resistance	16.2	N/A
$R\Theta_{JB}$	Junction-to-board thermal resistance	22.3	N/A
$R\Theta_{JA}$ (High k PCB)	Junction-to-free air thermal resistance	56.7	0
		50.4	150
		48.2	250
		45	500
Psi_{JT}	Junction-to-package top	0.7	0
		0.94	150
		1.1	250
		1.38	500
Psi_{JB}	Junction-to-board	22	0
		28.7	150
		28.4	250
		28	500

(1) These values are based on a JEDEC-defined 2S2P system (with the exception of the Theta JC [$R\Theta_{JC}$] value, which is based on a JEDEC-defined 1S0P system) and will change based on environment as well as application. For more information, see these EIA/JEDEC standards:

- JESD51-2, *Integrated Circuits Thermal Test Method Environmental Conditions - Natural Convection (Still Air)*
- JESD51-3, *Low Effective Thermal Conductivity Test Board for Leaded Surface Mount Packages*
- JESD51-7, *High Effective Thermal Conductivity Test Board for Leaded Surface Mount Packages*
- JESD51-9, *Test Boards for Area Array Surface Mount Package Thermal Measurements*

(2) lfm = linear feet per minute

6.11 Thermal Design Considerations

Based on the end application design and operational profile, the I_{DD} and I_{DDIO} currents could vary. Systems that exceed the recommended maximum power dissipation in the end product may require additional thermal enhancements. Ambient temperature (T_A) varies with the end application and product design. The critical factor that affects reliability and functionality is T_J, the junction temperature, not the ambient temperature. Hence, care should be taken to keep T_J within the specified limits. T_{case} should be measured to estimate the operating junction temperature T_J. T_{case} is normally measured at the center of the package top-side surface. The thermal application report *Semiconductor and IC Package Thermal Metrics* helps to understand the thermal metrics and definitions.

Copyright © 2022 Texas Instruments Incorporated

6.12 System

6.12.1 Power Management Module (PMM)

6.12.1.1 Introduction

The Power Management Module (PMM) handles all the power management functions required for device operation.

6.12.1.2 Overview

The block diagram of the PMM is shown in Figure 6-1. As can be seen, the PMM comprises of various subcomponents, which are described in the subsequent sections.

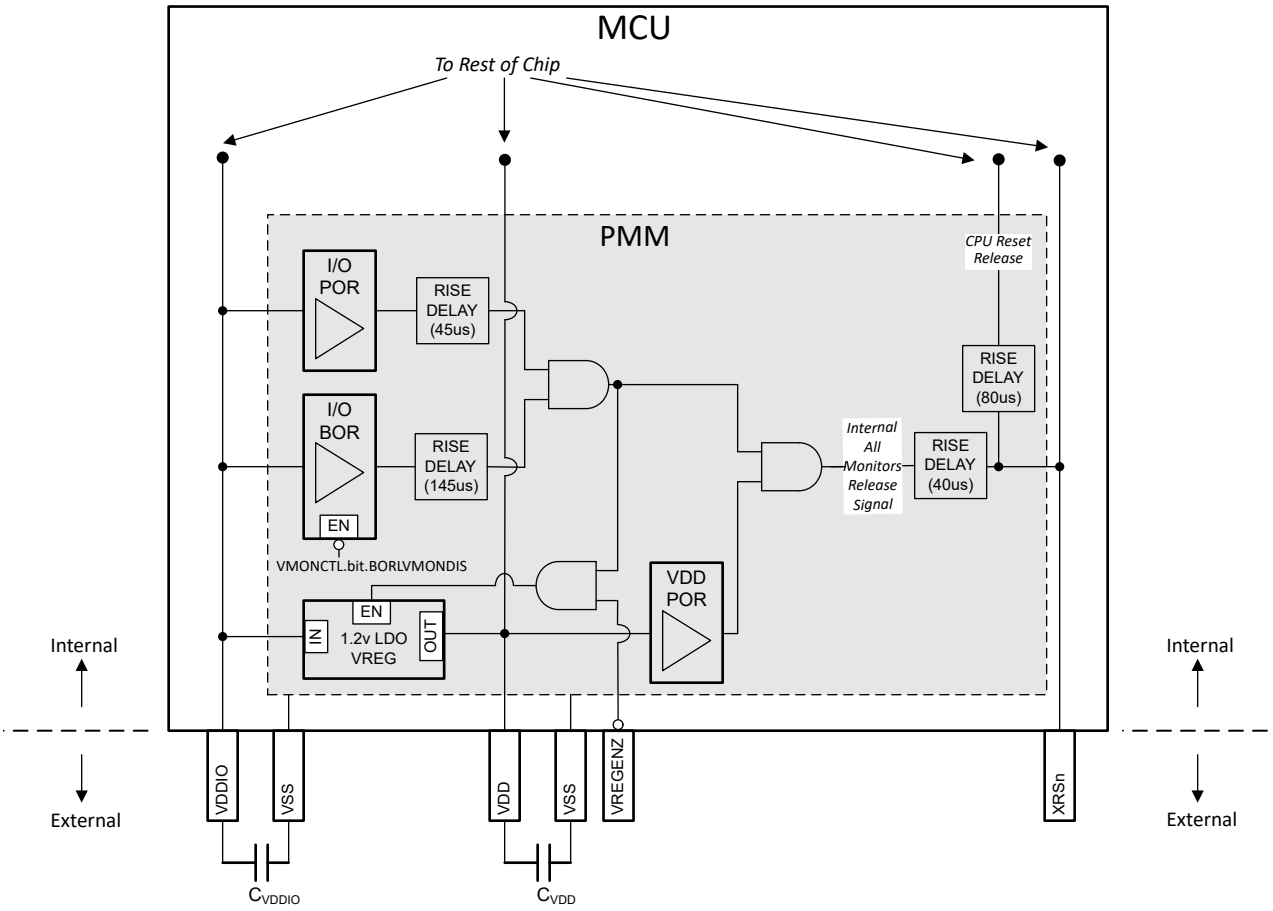

Figure 6-1. PMM Block Diagram

6.12.1.2.1 Power Rail Monitors

The PMM has voltage monitors on the supply rails that release the XRSn signal high once the voltages cross the set threshold during power up. They also function to trip the XRSn signal low if any of the voltages drop below the programmed levels. The various voltage monitors are described in subsequent sections.

Note

Not all the voltage monitors are supported for device operation in an application after boot up. In the case where a voltage monitor is not supported, an external supervisor is recommended if the device needs supply voltage monitoring while the application is running.

The three voltage monitors (I/O POR, I/O BOR, VDD POR) all have to release their respective outputs before the device begins operation (that is, XRSn goes high). However, if any of the voltage monitors trips, XRSn is driven low. The I/Os are held in high impedance when any of the voltage monitors trip.

Copyright © 2022 Texas Instruments Incorporated

6.12.1.2.1.1 I/O POR (Power-On Reset) Monitor

The I/O POR monitor supervises the VDDIO rail. During power up, this is the first monitor to release (that is, first to untrip) on VDDIO.

6.12.1.2.1.2 I/O BOR (Brown-Out Reset) Monitor

The I/O BOR monitor also supervises the VDDIO rail. During power up, this is the second monitor to release (that is, second to untrip) on VDDIO. This monitor has a tighter tolerance compared to the I/O POR.

Any drop in voltage below the recommended operating voltages will trip the I/O BOR and reset the device but this can be disabled by setting VMONCTL.bit.BORLVMONDIS to 1. The I/O BOR can only be disabled after the device has fully booted up. If the I/O BOR is disabled, the I/O POR will reset the device for voltage drops.

Note

The level at which the I/O POR trips is well below the minimum recommended voltage for VDDIO, and therefore should not be used for device supervision.

Figure 6-2 shows the operating region of the I/O BOR.

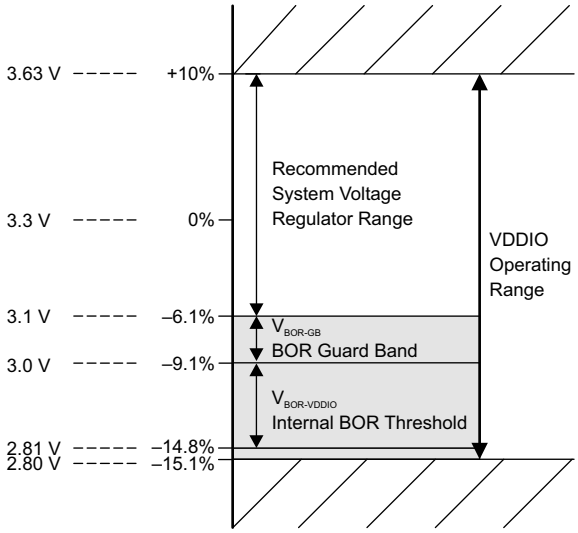

Figure 6-2. I/O BOR Operating Region

6.12.1.2.1.3 VDD POR (Power-On Reset) Monitor

The VDD POR monitor supervises the VDD rail. During power up, this monitor releases (that is, untrips) once the voltage crosses the programmed trip level on VDD.

Note

VDD POR is programmed at a level below the minimum recommended voltage for VDD, and therefore it should not be relied upon for VDD supervision if that is required in the application.

6.12.1.2.2 External Supervisor Usage

VDDIO Monitoring: The I/O BOR is supported for application use, so an external supervisor is not required to monitor the I/O rail.

VDD Monitoring: The VDD POR is not supported for application use. If VDD monitoring is required by the application, an external supervisor should be used to monitor the VDD rail.

Note

The use of an external supervisor with the internal VREG is not supported. If VDD monitoring is required by the application, a package with a VREGENZ pin must be used to power VDD externally.

Copyright © 2022 Texas Instruments Incorporated

6.12.1.2.3 Delay Blocks

The delay blocks in the path of the voltage monitors work together to delay the release time between the voltage monitors and XRSn. These delays ensure that the voltages are stable when XRSn releases in external VREG mode. The delay blocks are only active during power up (that is, when VDDIO and VDD are ramping up).

The delay blocks contribute to the minimum slew rates specified in Power Management Module Electrical Data and Timing for the power rails.

Note

The delay numbers specified in the block diagram are typical numbers.

6.12.1.2.4 Internal 1.2-V LDO Voltage Regulator (VREG)

The internal VREG is supplied by the VDDIO rail and can generate the 1.2 V required to power the VDD pins. It is enabled by tying the VREGENZ pin low. Although the internal VREG eliminates the need to use an external supply for VDD, decoupling capacitors are still required on the VDD pins for VREG stability and transients. See VDD Decoupling for details.

6.12.1.2.5 VREGENZ

The VREGENZ (VREG disable) pin controls the state of the internal VREG. To enable the internal VREG, the VREGENZ pin should be tied low. For applications supplying VDD externally (external VREG), the internal VREG should be disabled by tying the VREGENZ pin high.

Note

Not all device packages have VREGENZ pinned out. For packages without VREGENZ, external VREG mode is not supported.

6.12.1.3 External Components

6.12.1.3.1 Decoupling Capacitors

VDDIO and VDD require decoupling capacitors for correct operation. The requirements are outlined in subsequent sections.

6.12.1.3.1.1 VDDIO Decoupling

A minimum amount of decoupling capacitance should be placed on VDDIO. See the C_{VDDIO} parameter in Power Management Module Electrical Data and Timing. The actual amount of decoupling capacitance to use is a requirement of the power supply driving VDDIO. Either of the configurations outlined below is acceptable:

- **Configuration 1:** Place a decoupling capacitor on each VDDIO pin per the C_{VDDIO} parameter.
- **Configuration 2:** Install a single decoupling capacitor that is the equivalent of C_{VDDIO} * VDDIO pins.

Note

It is critical to have the decoupling capacitor or capacitors close to the device pins.

6.12.1.3.1.2 VDD Decoupling

A minimum amount of decoupling capacitance should be placed on VDD. See the C_{VDD} TOTAL parameter in Power Management Module Electrical Data and Timing.

In external VREG mode, the actual amount of decoupling capacitance to use is a requirement of the power supply driving VDD.

Either of the configurations outlined below is acceptable:

- **Configuration 1:** Divide C_{VDD} TOTAL across the VDD pins.
- **Configuration 2:** Install a single decoupling capacitor with value of C_{VDD} TOTAL.

Note

It is critical to have the decoupling capacitor or capacitors close to the device pins.

6.12.1.4 Power Sequencing

6.12.1.4.1 Supply Pins Ganging

It is strongly recommended that all 3.3-V rails be tied together and supplied from a single source. This list includes:

- VDDIO
- VDDA

In addition, no power pin should be left unconnected.

In external VREG mode, the VDD pins should be tied together and supplied from a single source.

In internal VREG mode, tying the VDD pins together is optional as long as each VDD pin has a capacitor on it. See VDD Decoupling for VDD decoupling configurations.

The analog modules on the device have fairly high PSRR; therefore, in most cases, noise on VDDA will have to exceed the recommended operating conditions of the supply rails before the analog modules see performance degradation. Therefore, supplying VDDA separately typically offers minimal benefits. Nevertheless, for the purposes of noise improvement, placing a pi filter between VDDIO and VDDA is acceptable.

Note

All the supply pins per rail are tied together internally. For example, all VDDIO pins are tied together internally, all VDD pins are tied together internally, and so forth.

6.12.1.4.2 Signal Pins Power Sequence

Before powering the device, no voltage larger than 0.3 V above VDDIO or 0.3 V below VSS should be applied to any digital pin; and no voltage larger than 0.3 V above VDDA or 0.3 V below VSSA should be applied to any analog pin (including VREFHI and VDAC). Simply, the signal pins should only be driven after XRSn goes high, provided all the 3.3-V rails are tied together. This sequencing is still required even if VDDIO and VDDA are not tied together.

CAUTION

If the above sequence is violated, device malfunction and possibly damage can occur as current will flow through unintended parasitic paths in the device.

6.12.1.4.3 Supply Pins Power Sequence

6.12.1.4.3.1 External VREG/VDD Mode Sequence

Figure 6-3 depicts the power sequencing requirements for external VREG mode. The values for all the parameters indicated can be found in Power Management Module Electrical Data and Timing.

Copyright © 2022 Texas Instruments Incorporated

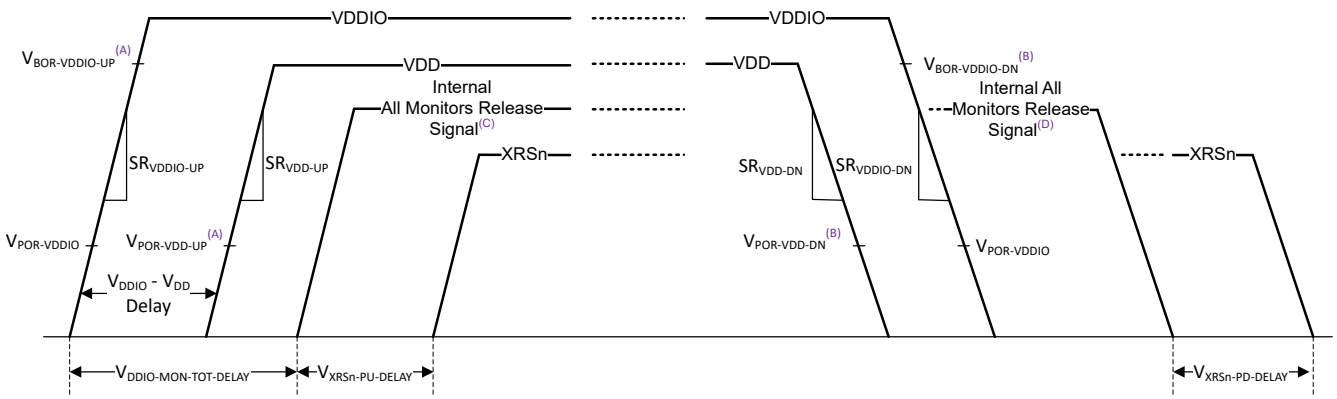

A. This trip point is the trip point before XRSn releases. See the Power Management Module Characteristics table.
B. This trip point is the trip point after XRSn releases. See the Power Management Module Characteristics table.
C. During power up, the All Monitors Release Signal goes high after all POR and BOR monitors are released. See the PMM Block Diagram.
D. During power down, the All Monitors Release Signal goes low if any of the POR or BOR monitors are tripped. See the PMM Block Diagram.

Figure 6-3. External VREG Power Up Sequence

- **For Power Up:**
  1. VDDIO (that is, the 3.3-V rail) should come up first with the minimum slew rate specified.
  2. VDD (that is, the 1.2-V rail) should come up next with the minimum slew rate specified.
  3. The time delta between the VDDIO rail coming up and when the VDD rail can come up is also specified.
  4. After the times specified by $V_{DDIO-MON-TOT-DELAY}$ and $V_{XRSN-PD-DELAY}$, XRSn will be released and the device starts the boot-up sequence.

     There is an additional delay between XRSn releasing (that is, going high) and the boot-up sequence starting. See Figure 6-1.
  5. The I/O BOR monitor has different release points during power up and power down.
  6. During power up, both VDDIO and VDD rails have to be up before XRSn releases.
- **For Power Down:**
  1. There is no requirement between VDDIO and VDD on which should power down first; however, there is a minimum slew rate specification.
  2. The I/O BOR monitor has different release points during power up and power down.
  3. Any of the POR or BOR monitors that trips during power down will cause XRSn to go low after $V_{XRSN-PD-DELAY}$.

Note

The *All Monitors Release Signal* is an internal signal.

Note

If there is an external circuit driving XRSn (for example, a supervisor), the boot-up sequence does not start until the XRSn pin is released by all internal and external sources.

6.12.1.4.3.2 Internal VREG/VDD Mode Sequence

Figure 6-4 depicts the power sequencing requirements for internal VREG mode. The values for all the parameters indicated can be found in Power Management Module Electrical Data and Timing.

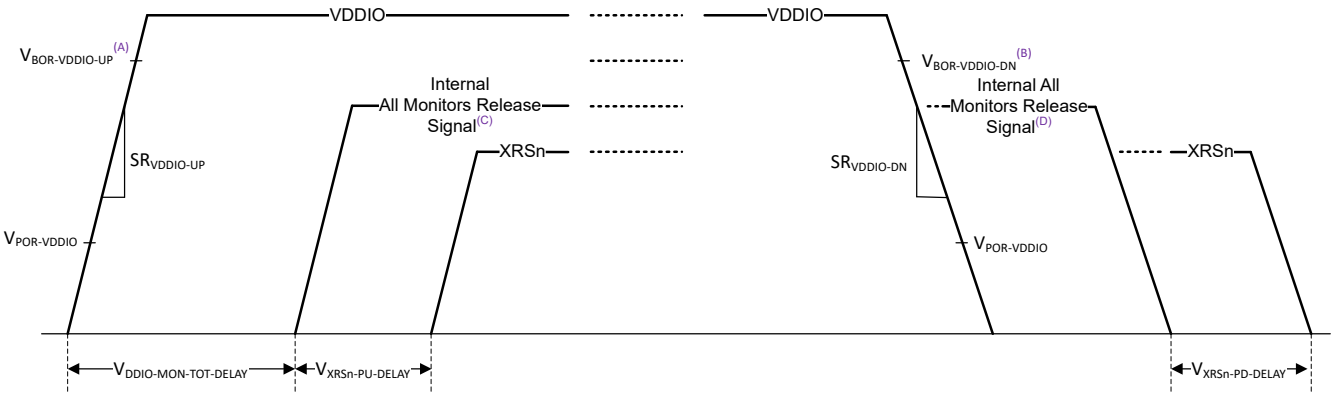

A. This trip point is the trip point before XRSn releases. See the Power Management Module Characteristics table.
B. This trip point is the trip point after XRSn releases. See the Power Management Module Characteristics table.
C. During power up, the All Monitors Release Signal goes high after all POR and BOR monitors are released. See the PMM Block Diagram.
D. During power down, the All Monitors Release Signal goes low if any of the POR or BOR monitors are tripped. See the PMM Block Diagram.

Figure 6-4. Internal VREG Power Up Sequence

- **For Power Up:**
  1. VDDIO (that is, the 3.3-V rail) should come up with the minimum slew rate specified.
  2. The Internal VREG powers up after the I/O monitors (I/O POR and I/O BOR) are released.
  3. After the times specified by $V_{DDIO\text{-}MON\text{-}TOT\text{-}DELAY}$ and $V_{XRSN\text{-}PU\text{-}DELAY}$, XRSn will be released and the device starts the boot-up sequence.

     There is an additional delay between XRSn releasing (that is, going high) and the boot-up sequence starting. See Figure 6-1.
  4. The I/O BOR monitor has different release points during power up and power down.
- **For Power Down:**
  1. The only requirement on VDDIO during power down is the slew rate.
  2. The I/O BOR monitor has different release points during power up and power down.
  3. The I/O BOR tripping will cause XRSn to go low after $V_{XRSN\text{-}PD\text{-}DELAY}$ and also power down the Internal VREG.

Note

The *All Monitors Release Signal* is an internal signal.

Note

If there is an external circuit driving XRSn (for example, a supervisor), the boot-up sequence does not start until the XRSn pin is released by all internal and external sources.

6.12.1.4.3.3 Supply Sequencing Summary and Effects of Violations

The acceptable power-up sequence for the rails is summarized below. "Power up" here means the rail in question has reached the minimum recommended operating voltage.

CAUTION

Non-acceptable sequences will lead to reliability concerns and possibly damage.

For simplicity, it is recommended that all 3.3-V rails be tied together, and to follow the descriptions in Supply Pins Power Sequence.

Copyright © 2022 Texas Instruments Incorporated

Table 6-1. External VREG Sequence Summary

CASE	RAILS POWER-UP ORDER			ACCEPTABLE
	VDDIO	VDDA	VDD	
A	1	2	3	Yes
B	1	3	2	Yes
C	2	1	3	-
D	2	3	1	-
E	3	2	1	-
F	3	1	2	-
G	1	1	2	Yes
H	2	2	1	-

Table 6-2. Internal VREG Sequence Summary

CASE	RAILS POWER-UP ORDER		ACCEPTABLE
	VDDIO	VDDA	
A	1	2	Yes
B	2	1	-
C	1	1	Yes

Note

The analog modules on the device should only be powered after VDDA has reached the minimum recommended operating voltage.

6.12.1.4.3.4 Supply Slew Rate

VDDIO has a minimum slew rate requirement. If the minimum slew rate is not met, XRSn might toggle a few times until VDDIO crosses the I/O BOR region.

Note

The toggling on XRSn has no adverse effect on the device as boot only starts once XRSn is steadily high. However if XRSn from the device is used to gate the reset signal of other ICs, then the slew rate requirement should be met to prevent this toggling.

VDD has a minimum slew rate requirement in external VREG mode. If the minimum slew rate is not met, the device can release from reset and start booting before VDD has reached the minimum operating voltage, which can result in the device not functioning correctly.

Note

If the minimum slew rate cannot be met, a supervisor must be used on VDD to keep XRSn low until VDD crosses the minimum operating voltage in order to ensure correct device functionality.

Copyright © 2022 Texas Instruments Incorporated

6.12.1.5 Power Management Module Electrical Data and Timing

6.12.1.5.1 Power Management Module Operating Conditions

over recommended operating conditions (unless otherwise noted)

PARAMETER		TEST CONDITIONS	MIN	TYP	MAX	UNIT
General						
C_{VDDIO} (1) (2)	VDDIO Capacitance Per Pin(7)		0.1			uF
C_{VDDA} (1) (2)	VDDA Capacitance Per Pin(7)		2.2			uF
$SR_{VDDIO-UP}$ (3)	Supply Ramp Up Rate of 3.3V Rail (VDDIO)		8		100	mV/us
$SR_{VDDIO-DN}$ (3)	Supply Ramp Down Rate of 3.3V Rail (VDDIO)		20		100	mV/us
$V_{BOR-VDDIO-GB}$ (5)	VDDIO Brown Out Reset Voltage Guardband			0.1		V
External VREG						
$C_{VDD\ TOTAL}$ (1) (4)	Total VDD Capacitance(7)		10			uF
SR_{VDD-UP} (3)	Supply Ramp Up Rate of 1.2V Rail (VDD)		3.5		100	mV/us
SR_{VDD-DN} (3)	Supply Ramp Down Rate of 1.2V Rail (VDD)		10		100	mV/us
V_{DDIO} - V_{DD} Delay(6)	Ramp Delay Between VDDIO and VDD		0			us
Internal VREG						
$C_{VDD\ TOTAL}$(4)	Total VDD Capacitance(7)		10		26.8	uF

(1) The exact value of the decoupling capacitance depends on the system voltage regulation solution that is supplying these pins.
(2) It is recommended to tie the 3.3V rails (VDDIO, VDDA) together and supply them from a single source.
(3) See the *Supply Slew Rate* section. Supply ramp rate faster than the maximum can trigger the on-chip ESD protection.
(4) See the *Power Management Module (PMM)* section on possible configurations for the total decoupling capacitance.
(5) TI recommends $V_{BOR-VDDIO-GB}$ to avoid BOR-VDDIO resets due to normal supply noise or load-transient events on the 3.3-V VDDIO system regulator. Good system regulator design and decoupling capacitance (following the system regulator specifications) are important to prevent activation of the BOR-VDDIO during normal device operation. The value of $V_{BOR-VDDIO-GB}$ is a system-level design consideration; the voltage listed here is typical for many applications.
(6) Delay between when the 3.3-V rail ramps up and when the 1.2-V rail ramps up. See the *VREG Sequence Summary* table for the allowable supply ramp sequences.
(7) Max capacitor tolerance should be 20%.

6.12.1.5.2 Power Management Module Characteristics

over recommended operating conditions (unless otherwise noted)

PARAMETER		TEST CONDITIONS	MIN	TYP	MAX	UNIT
V_{VREG}	Internal Voltage Regulator Output		1.14	1.2	1.32	V
$V_{VREG-PU}$	Internal Voltage Regulator Power Up Time				350	µs
$V_{VREG-INRUSH}$ (5)	Internal Voltage Regulator Inrush Current			650		mA
$V_{POR-VDDIO}$	VDDIO Power on Reset Voltage	Before and After XRSn Release		2.3		V
$V_{BOR-VDDIO-UP}$ (1)	VDDIO Brown Out Reset Voltage on Ramp Up	Before XRSn Release		2.7		V
$V_{BOR-VDDIO-DN}$ (1)	VDDIO Brown Out Reset Voltage on Ramp Down	After XRSn Release	2.81		3.0	V

Copyright © 2022 Texas Instruments Incorporated

6.12.1.5.2 Power Management Module Characteristics (continued)

over recommended operating conditions (unless otherwise noted)

PARAMETER		TEST CONDITIONS	MIN	TYP	MAX	UNIT
$V_{POR-VDD-UP}$ (2)	VDD Power on Reset Voltage on Ramp Up	Before XRSn Release		1		V
$V_{POR-VDD-DN}$ (2)	VDD Power on Reset Voltage on Ramp Down	After XRSn Release		1		V
$V_{XRSn-PU-DELAY}$ (3)	XRSn Release Delay after Supplies are Ramped Up During Power Up	This is the final delay		40		us
$V_{XRSn-PD-DELAY}$ (4)	XRSn Trip Delay after Supplies are Ramped Down During Power Down			2		us
$V_{DDIO-MON-TOT-DELAY}$	Total Delays in Path of VDDIO Monitors (POR, BOR)			145		us
$V_{XRSn-MON-RELEASE-DELAY}$	XRSn Release Delay after a VDD POR Event	Supplies Within Operating Range		40		us
	XRSn Release Delay after a VDDIO BOR			140		us
	XRSn Release Delay after a VDDIO POR Event			185		us

(1) See the *Supply Voltages* figure.
(2) $V_{POR-VDD}$ is not supported and it is set to trip at a level below the recommended operating conditions. If monitoring of VDD is needed, an external supervisor is required.
(3) Supplies are considered fully ramped up after they cross the minimum recommended operating conditions for the respective rail. All POR and BOR monitors need to be released before this delay takes effect. RC network delay will add to this.
(4) On power down, any of the POR or BOR monitors that trips will immediately trip XRSn. This delay is the time between any of the POR, BOR monitors tripping and XRSn going low. It is variable and depends on the ramp down rate of the supply. RC network delay will add to this.
(5) This is the transient current drawn on the VDDIO rail when the internal VREG turns on. Due to this, there might be some voltage drops on the VDDIO rail when the VREG turns on which could cause the VREG to ramp up in steps. There is no detriment to the device from this but the effect can be reduced if desired by using sufficient decoupling capacitors on VDDIO or picking an LDO/DC-DC that can supply this transient current.

Supply Voltages

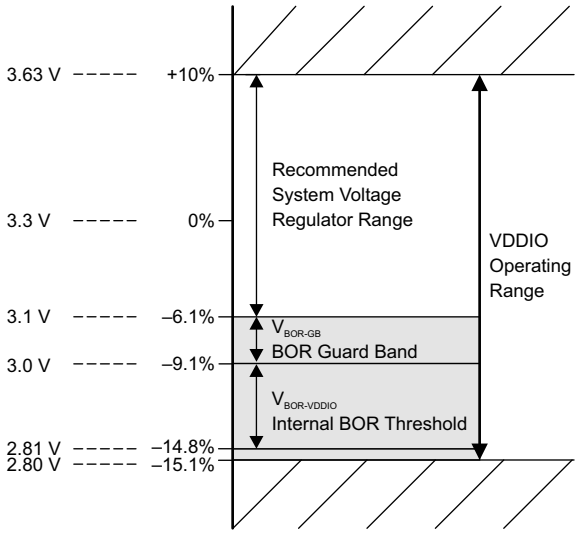

Figure 6-5. Supply Voltages

6.12.2 Reset Timing

XRSn is the device reset pin. It functions as an input and open-drain output. The device has a built-in power-on reset (POR) and brown-out reset (BOR) monitors. During power up, the monitor circuits keep the XRSn pin low. For more details, see the Power Management Module (PMM) section. A watchdog or NMI watchdog reset will also drive the pin low. An external open-drain circuit may drive the pin to assert a device reset.

A resistor with a value from 2.2 kΩ to 10 kΩ should be placed between XRSn and VDDIO. A capacitor should be placed between XRSn and VSS for noise filtering, it should be 100 nF or smaller. These values will allow the watchdog to properly drive the XRSn pin to V_{OL} within 512 OSCCLK cycles when the watchdog reset is asserted. Figure 6-6 shows the recommended reset circuit.

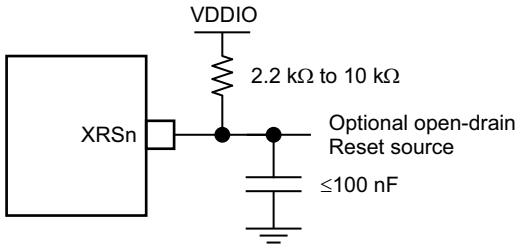

Figure 6-6. Reset Circuit

6.12.2.1 Reset Sources

The Reset Signals table summarizes the various reset signals and their effect on the device.

Table 6-3. Reset Signals

Reset Source	CPU Core Reset (C28x, FPU, TMU)	Peripherals Reset	JTAG / Debug Logic Reset	IOs	$\overline{\text{XRS}}$ Output
POR	Yes	Yes	Yes	Hi-Z	Yes
BOR	Yes	Yes	Yes	Hi-Z	Yes
$\overline{\text{XRS}}$ Pin	Yes	Yes	No	Hi-Z	-
$\overline{\text{WDRS}}$	Yes	Yes	No	Hi-Z	Yes
$\overline{\text{NMIWDRS}}$	Yes	Yes	No	Hi-Z	Yes
$\overline{\text{SYSRS}}$ (Debugger Reset)	Yes	Yes	No	Hi-Z	No
$\overline{\text{SCCRESET}}$	Yes	Yes	No	Hi-Z	No
SIMRESET. $\overline{\text{XRS}}$	Yes	Yes	No	Hi-Z	Yes
SIMRESET. $\overline{\text{CPU1RS}}$	Yes	Yes	No	Hi-Z	No
$\overline{\text{HWBISTRS}}$	Yes	No	No	No	No

The parameter $t_{h(boot\text{-}mode)}$ must account for a reset initiated from any of these sources.

See the Resets section of the System Control chapter in the *TMS320F28003x Real-Time Microcontrollers Technical Reference Manual*.

CAUTION

Some reset sources are internally driven by the device. Some of these sources will drive XRSn low, use this to disable any other devices driving the boot pins. The SCCRESET and debugger reset sources do not drive XRSn; therefore, the pins used for boot mode should not be actively driven by other devices in the system. The boot configuration has a provision for changing the boot pins in OTP.

Copyright © 2022 Texas Instruments Incorporated

6.12.2.2 Reset Electrical Data and Timing

6.12.2.2.1 Reset (XRSn) Timing Requirements

		MIN	MAX	UNIT
$t_{h(boot-mode)}$	Hold time for boot-mode pins	1.5		ms
$t_{w(RSL2)}$	Pulse duration, XRSn low on warm reset	3.2		µs

6.12.2.2.2 Reset (XRSn) Switching Characteristics

over recommended operating conditions (unless otherwise noted)

PARAMETER		MIN	TYP	MAX	UNIT
$t_{w(RSL1)}$	Pulse duration, XRSn driven low by device after supplies are stable		100		µs
$t_{w(WDRS)}$	Pulse duration, reset pulse generated by watchdog		$512t_{c(OSCCLK)}$		cycles
$t_{boot-flash}$	Boot-ROM execution time to first instruction fetch in flash			1.2	ms

6.12.2.2.3 Reset Timing Diagrams

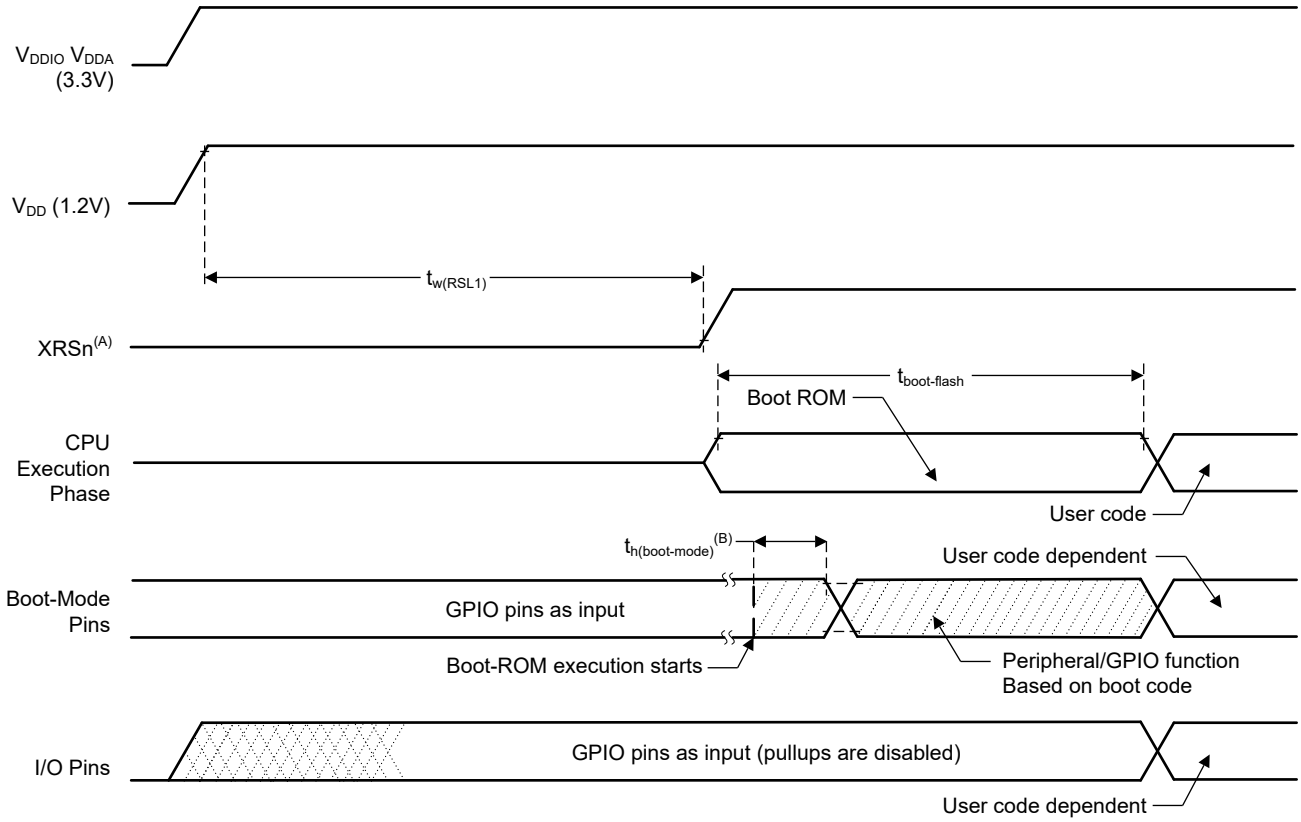

A. The XRSn pin can be driven externally by a supervisor or an external pullup resistor, see the Pin Attributes table. On-chip monitors will hold this pin low until the supplies are in a valid range.

B. After reset from any source (see the Reset Sources section), the boot ROM code samples Boot Mode pins. Based on the status of the Boot Mode pin, the boot code branches to destination memory or boot code function. If boot ROM code executes after power-on conditions (in debugger environment), the boot code execution time is based on the current SYSCLK speed. The SYSCLK will be based on user environment and could be with or without PLL enabled.

Figure 6-7. Power-on Reset

Copyright © 2022 Texas Instruments Incorporated

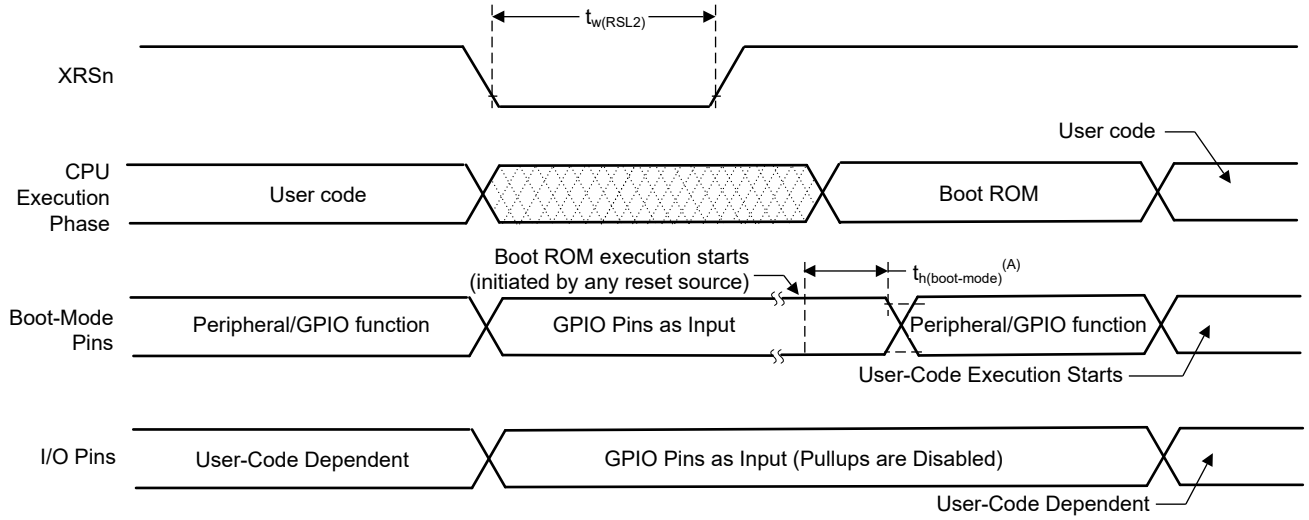

A. After reset from any source (see the Reset Sources section), the Boot ROM code samples BOOT Mode pins. Based on the status of the Boot Mode pin, the boot code branches to destination memory or boot code function. If Boot ROM code executes after power-on conditions (in debugger environment), the Boot code execution time is based on the current SYSCLK speed. The SYSCLK will be based on user environment and could be with or without PLL enabled.

Figure 6-8. Warm Reset

Copyright © 2022 Texas Instruments Incorporated

6.12.3 Clock Specifications

6.12.3.1 Clock Sources

Table 6-4. Possible Reference Clock Sources

CLOCK SOURCE	DESCRIPTION
INTOSC1	Internal oscillator 1. Zero-pin overhead 10-MHz internal oscillator.
INTOSC2(1)	Internal oscillator 2. Zero-pin overhead 10-MHz internal oscillator.
X1 (XTAL)	External crystal or resonator connected between the X1 and X2 pins or single-ended clock connected to the X1 pin.

(1) On reset, internal oscillator 2 (INTOSC2) is the default clock source for the PLL (OSCCLK).

Copyright © 2022 Texas Instruments Incorporated

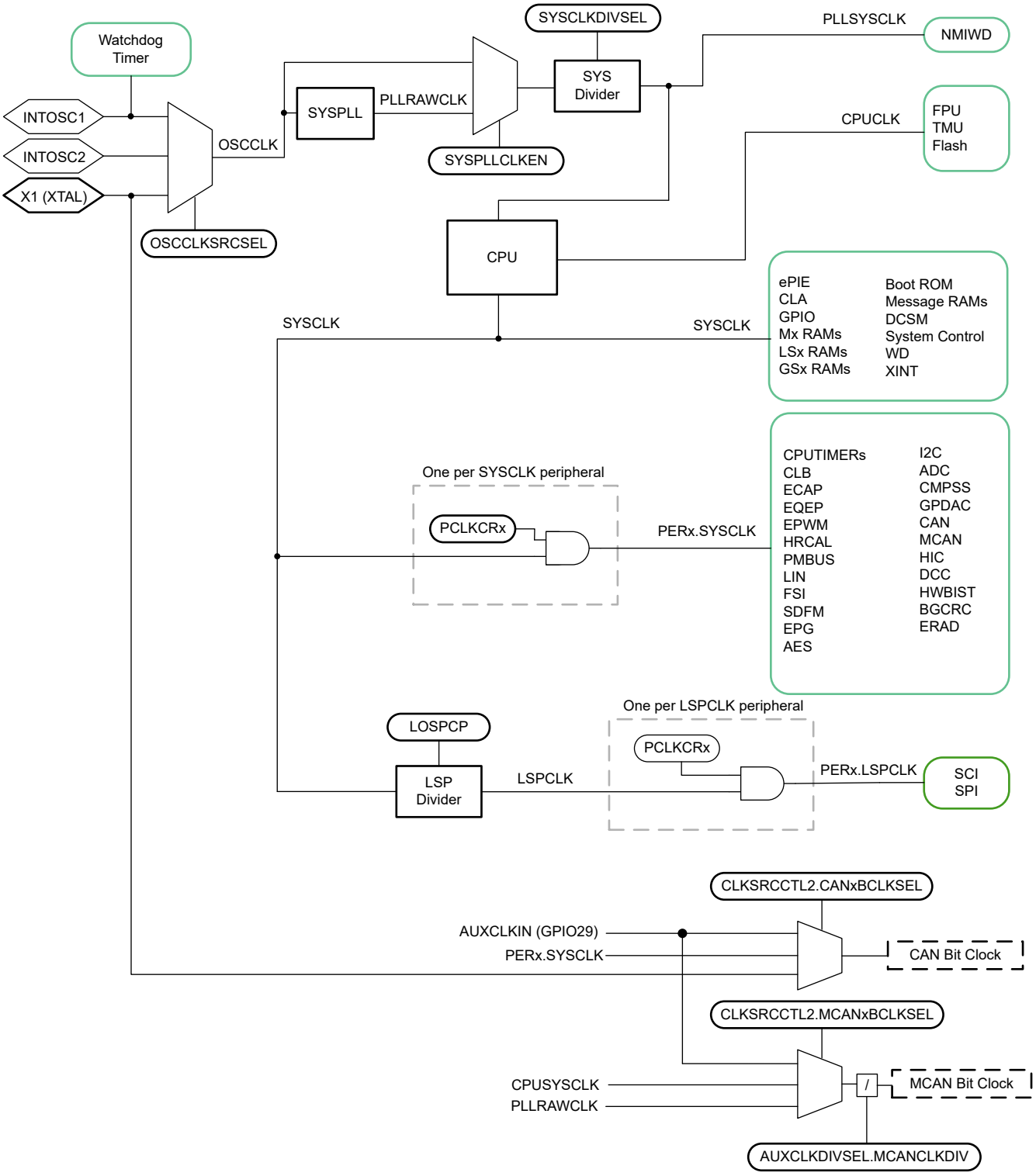

Figure 6-9. Clocking System

Copyright © 2022 Texas Instruments Incorporated

SYSPLL

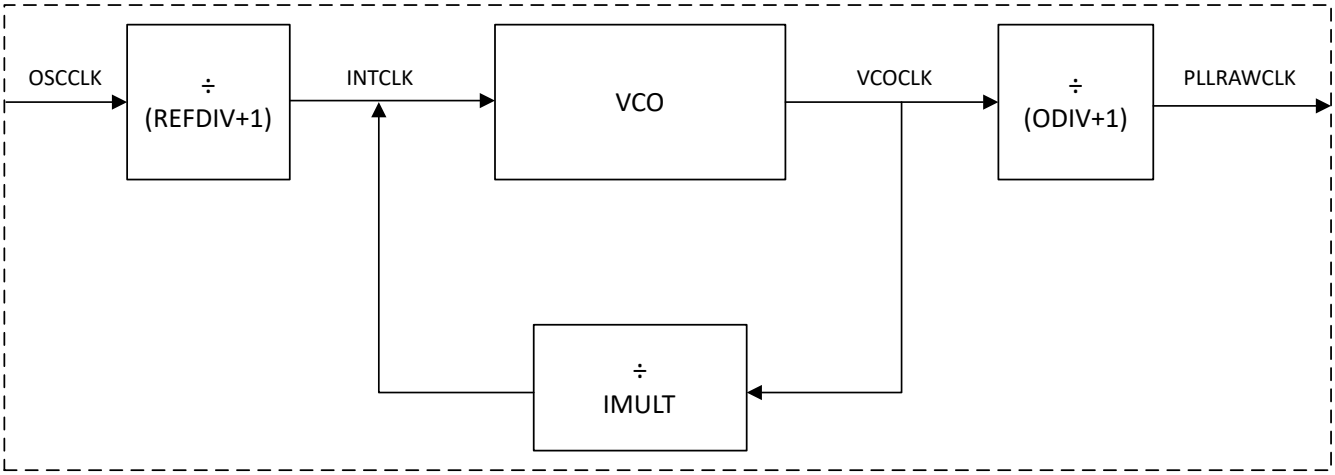

Figure 6-10. System PLL

In Figure 6-10,

$$f_{PLLRAWCLK} = \frac{f_{OSCCLK}}{(REFDIV + 1)} \times \frac{IMULT}{(ODIV + 1)}$$

6.12.3.2 Clock Frequencies, Requirements, and Characteristics

This section provides the frequencies and timing requirements of the input clocks, PLL lock times, frequencies of the internal clocks, and the frequency and switching characteristics of the output clock.

6.12.3.2.1 Input Clock Frequency and Timing Requirements, PLL Lock Times

6.12.3.2.1.1 Input Clock Frequency

		MIN	MAX	UNIT
$f_{(XTAL)}$	Frequency, X1/X2, from external crystal or resonator	10	20	MHz
$f_{(X1)}$	Frequency, X1, from external oscillator	10	25	MHz
$f_{(AUXI)}$	Frequency, AUXCLKIN, from external oscillator	10	60	MHz

6.12.3.2.1.2 XTAL Oscillator Characteristics

over recommended operating conditions (unless otherwise noted)

PARAMETER		MIN	TYP	MAX	UNIT
X1 V_{IL}	Valid low-level input voltage (Comparator)	–0.3		0.3 * VDDIO	V
X1 V_{IH}	Valid high-level input voltage (Comparator)	0.7 * VDDIO		VDDIO + 0.3	V

6.12.3.2.1.3 X1 Input Level Characteristics When Using an External Clock Source (Not a Crystal)

over recommended operating conditions (unless otherwise noted)

PARAMETER		MIN	MAX	UNIT
X1 V_{IL}	Valid low-level input voltage (Buffer)	–0.3	0.3 * VDDIO	V
X1 V_{IH}	Valid high-level input voltage (Buffer)	0.7 * VDDIO	VDDIO + 0.3	V

6.12.3.2.1.4 X1 Timing Requirements

		MIN	MAX	UNIT
$t_{f(X1)}$	Fall time, X1		6	ns
$t_{r(X1)}$	Rise time, X1		6	ns
$t_{w(X1L)}$	Pulse duration, X1 low as a percentage of $t_{c(X1)}$	45%	55%	
$t_{w(X1H)}$	Pulse duration, X1 high as a percentage of $t_{c(X1)}$	45%	55%	

6.12.3.2.1.5 AUXCLKIN Timing Requirements

		MIN	MAX	UNIT
$t_{f(AUXI)}$	Fall time, AUXCLKIN		6	ns
$t_{r(AUXI)}$	Rise time, AUXCLKIN		6	ns
$t_{w(AUXL)}$	Pulse duration, AUXCLKIN low as a percentage of $t_{c(XCI)}$	45%	55%	
$t_{w(AUXH)}$	Pulse duration, AUXCLKIN high as a percentage of $t_{c(XCI)}$	45%	55%	

6.12.3.2.1.6 APLL Characteristics

over operating free-air temperature range (unless otherwise noted)

PARAMETER	MIN	TYP	MAX	UNIT
PLL Lock time				
SYS PLL Lock Time(1)			5µs + (1024 * (REFDIV + 1) * $t_{c(OSCCLK)}$)	us

(1) The PLL lock time here defines the typical time that takes for the PLL to lock once PLL is enabled (SYSPLLCTL1[PLLENA]=1). Additional time to verify the PLL clock using Dual Clock Comparator (DCC) is not accounted here. TI recommends using the latest example software from C2000Ware for initializing the PLLs. For the system PLL, see InitSysPll() or SysCtl_setClock().

Copyright © 2022 Texas Instruments Incorporated

6.12.3.2.1.7 XCLKOUT Switching Characteristics (PLL Bypassed or Enabled)

over recommended operating conditions (unless otherwise noted)

PARAMETER[1]		MIN	MAX	UNIT
$t_{f(XCO)}$	Fall time, XCLKOUT		5	ns
$t_{r(XCO)}$	Rise time, XCLKOUT		5	ns
$t_{w(XCOL)}$	Pulse duration, XCLKOUT low	H – 2[2]	H + 2[2]	ns
$t_{w(XCOH)}$	Pulse duration, XCLKOUT high	H – 2[2]	H + 2[2]	ns
$f_{(XCO)}$	Frequency, XCLKOUT		50	MHz

(1) A load of 40 pF is assumed for these parameters.
(2) $H = 0.5t_{c(XCO)}$

6.12.3.2.1.8 Internal Clock Frequencies

		MIN	NOM	MAX	UNIT
$f_{(SYSCLK)}$	Frequency, device (system) clock	2		120	MHz
$t_{c(SYSCLK)}$	Period, device (system) clock	8.33		500	ns
$f_{(INTCLK)}$	Frequency, system PLL going into VCO (after REFDIV)	2		20	MHz
$f_{(VCOCLK)}$	Frequency, system PLL VCO (before ODIV)	220		600	MHz
$f_{(PLLRAWCLK)}$	Frequency, system PLL output (before SYSCLK divider)	6		240	MHz
$f_{(PLL)}$	Frequency, PLLSYSCLK	2		120	MHz
$f_{(PLL_LIMP)}$	Frequency, PLL Limp Frequency [1]		45/(ODIV+1)		MHz
$f_{(LSP)}$	Frequency, LSPCLK	2		120	MHz
$t_{c(LSPCLK)}$	Period, LSPCLK	8.33		500	ns
$f_{(OSCCLK)}$	Frequency, OSCCLK (INTOSC1 or INTOSC2 or XTAL or X1)		See respective clock		MHz
$f_{(EPWM)}$	Frequency, EPWMCLK			120	MHz
$f_{(HRPWM)}$	Frequency, HRPWMCLK	60		120	MHz

(1) PLL output frequency when OSCCLK is dead (Loss of OSCCLK causes PLL to Limp).

Copyright © 2022 Texas Instruments Incorporated

6.12.3.3 Input Clocks and PLLs

In addition to the internal 0-pin oscillators, three types of external clock sources are supported:

- A single-ended 3.3-V external clock. The clock signal should be connected to X1, as shown in Figure 6-11, with the XTALCR.SE bit set to 1.
- An external crystal. The crystal should be connected across X1 and X2 with its load capacitors connected to VSS as shown in Figure 6-12.
- An external resonator. The resonator should be connected across X1 and X2 with its ground connected to VSS as shown in Figure 6-13.

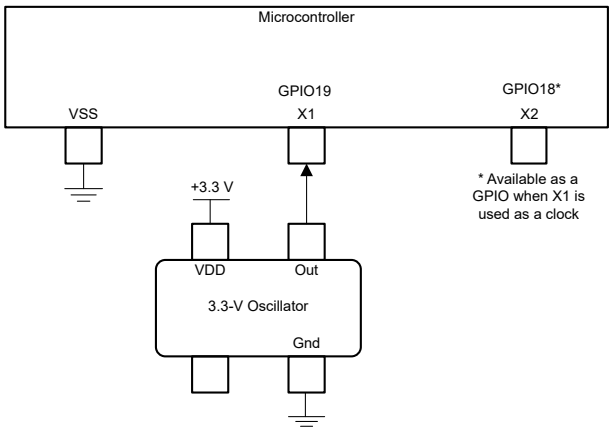

Figure 6-11. Single-ended 3.3-V External Clock

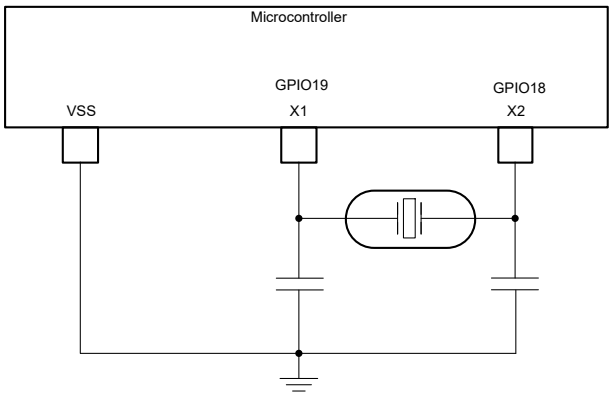

Figure 6-12. External Crystal

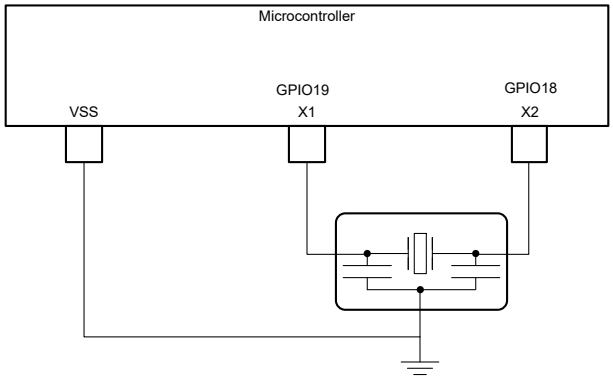

Figure 6-13. External Resonator

6.12.3.4 XTAL Oscillator

6.12.3.4.1 Introduction

The XTAL oscillator in this device is an embedded electrical oscillator that, when paired with a compatible crystal, can generate the system clock required by the device.

6.12.3.4.2 Overview

The following sections describe the components of the electrical oscillator and crystal.

6.12.3.4.2.1 Electrical Oscillator

The electrical oscillator in this device is a Pierce oscillator design. It is a positive feedback inverter circuit that requires a tuning circuit in order to oscillate. When this oscillator is paired with a compatible crystal, a tank circuit is formed. This tank circuit oscillates at the fundamental frequency of the crystal component. On this device, the oscillator is designed to operate in parallel resonance mode due to the shunt capacitor (C0) and required load capacitors (CL). Figure 6-14 illustrates the components of the electrical oscillator and the tank circuit.

Copyright © 2022 Texas Instruments Incorporated

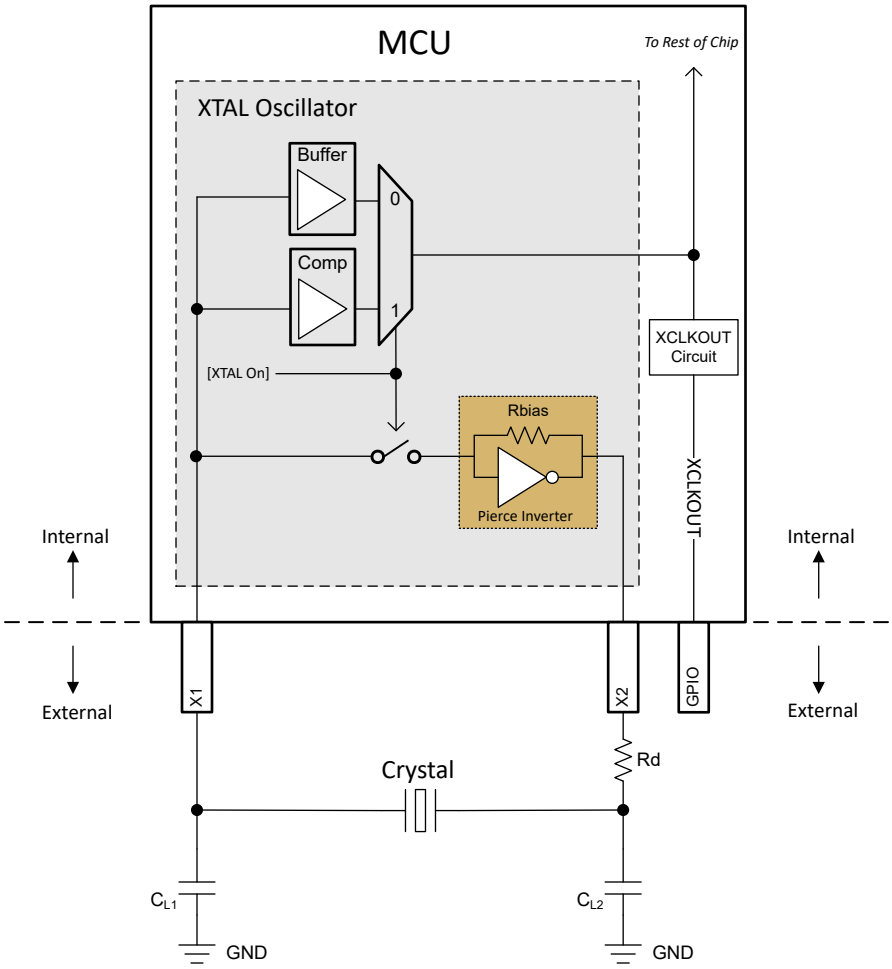

Figure 6-14. Electrical Oscillator Block Diagram

6.12.3.4.2.1.1 Modes of Operation

The electrical oscillator in this device has two modes of operation: crystal mode and single-ended mode.

6.12.3.4.2.1.1.1 Crystal Mode of Operation

In the crystal mode of operation, a quartz crystal with load capacitors has to be connected to X1 and X2.

This mode of operation is engaged when [XTAL On] = 1, which is achieved by setting XTALCR.OSCOFF = 0 and XTALCR.SE = 0. There is an internal bias resistor for the feedback loop so an external one should not be used. Adding an external bias resistor will create a parallel resistance with the internal Rbias, moving the bias point of operation and possibly leading to clipped waveforms, out-of-specification duty cycle, and reduction in the effective negative resistance.

In this mode of operation, the resultant clock on X1 is passed through a comparator (Comp) to the rest of the chip. The clock on X1 needs to meet the VIH and VIL of the comparator. See the *XTAL Oscillator Characteristics* table for the VIH and VIL requirements of the comparator.

6.12.3.4.2.1.1.2 Single-Ended Mode of Operation

In the single-ended mode of operation, a clock signal is connected to X1 with X2 left unconnected. A quartz crystal should not be used in this mode.

This mode is enabled when [XTAL On] = 0, which can be achieved by setting XTALCR.OSCOFF = 1 and XTALCR.SE = 1.

Copyright © 2022 Texas Instruments Incorporated

In this mode of operation, the clock on X1 is passed through a buffer (Buffer) to the rest of the chip. See the *X1 Input Level Characteristics When Using an External Clock Source (Not a Crystal)* table for the input requirements of the buffer.

6.12.3.4.2.1.2 XTAL Output on XCLKOUT

The output of the electrical oscillator that is fed to the rest of the chip can be brought out on XCLKOUT for observation by configuring the CLKSRCCTL3.XCLKOUTSEL and XCLKOUTDIVSEL.XCLKOUTDIV registers. See the GPIO Muxed Pins table for a list of GPIOs that XCLKOUT comes out on.

6.12.3.4.2.2 Quartz Crystal

Electrically, a quartz crystal can be represented by an LCR (Inductor-Capacitor-Resistor) circuit. However, unlike an LCR circuit, crystals have very high Q due to the low motional resistance and are also very underdamped. Components of the crystal are shown in Figure 6-15 and explained below.

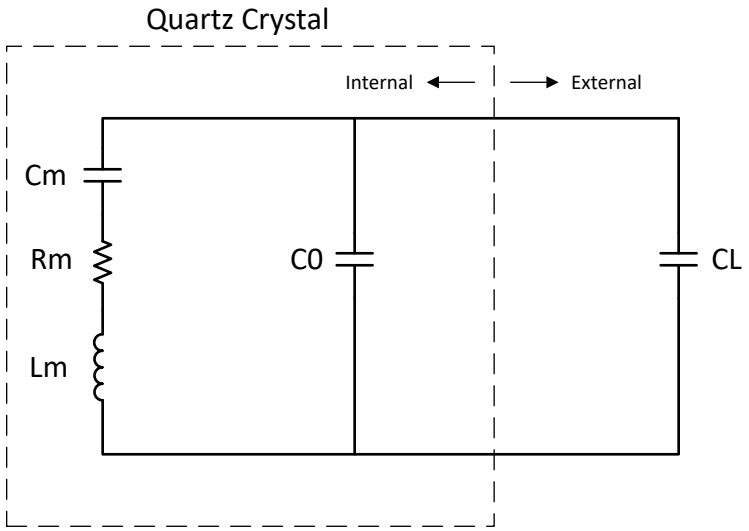

Figure 6-15. Crystal Electrical Representation

Cm (Motional capacitance): Denotes the elasticity of the crystal.

Rm (Motional resistance): Denotes the resistive losses within the crystal. This is not the ESR of the crystal but can be approximated as such depending on the values of the other crystal components.

Lm (Motional inductance): Denotes the vibrating mass of the crystal.

C0 (Shunt capacitance): The capacitance formed from the two crystal electrodes and stray package capacitance.

CL (Load capacitance): This is the effective capacitance seen by the crystal at its electrodes. It is external to the crystal. The frequency ppm specified in the crystal data sheet is usually tied to the CL parameter.

Note that most crystal manufacturers specify CL as the effective capacitance seen at the crystal pins, while some crystal manufacturers specify CL as the capacitance on just one of the crystal pins. Check with the crystal manufacturer for how the CL is specified in order to use the correct values in calculations.

From Figure 6-14, CL1 and CL2 are in series; so, to find the equivalent total capacitance seen by the crystal, the capacitance series formula has to be applied which simply evaluates to [CL1]/2 if CL1 = CL2.

It is recommended that a stray PCB capacitance be added to this value. 3 pF to 5 pF are reasonable estimates, but the actual value will depend on the PCB in question.

Note that the load capacitance is a requirement of both the electrical oscillator and crystal. The value chosen has to satisfy both the electrical oscillator and the crystal.

Copyright © 2022 Texas Instruments Incorporated

The effect of CL on the crystal is frequency-pulling. If the effective load capacitance is lower than the target, the crystal frequency will increase and vice-versa. However, the effect of frequency-pulling is usually very minimal and typically results in less than 10-ppm variation from the nominal frequency.

6.12.3.4.2.3 GPIO Modes of Operation

On this device, X1 and X2 can be used as GPIO19 and GPIO18, respectively, depending on the operating mode of the XTAL. Refer to the External Oscillator (XTAL) section of the *TMS320F28003x Real-Time Microcontrollers Technical Reference Manual*.

6.12.3.4.3 Functional Operation

6.12.3.4.3.1 ESR – Effective Series Resistance

Effective Series Resistance is the resistive load the crystal presents to the electrical oscillator at resonance. The higher the ESR, the lower the Q, and less likely the crystal will start up or maintain oscillation. The relationship between ESR and the crystal components is indicated below.

$$ESR = Rm * \left(1 + \frac{C0}{CL}\right)^2 \quad (1)$$

Note that ESR is not the same as motional resistance of the crystal, but can be approximated as such if the effective load capacitance is much greater than the shunt capacitance.

6.12.3.4.3.2 Rneg – Negative Resistance

Negative resistance is the impedance presented by the electrical oscillator to the crystal. It is the amount of energy the electrical oscillator must supply to the crystal to overcome the losses incurred during oscillation. Rneg depicts a circuit that provides rather than consume energy and can also be viewed as the overall gain of the circuit.

The generally accepted practice is to have Rneg > 3x ESR to 5x ESR to ensure the crystal starts up under all conditions. Note that it takes slightly more energy to start up the crystal than it does to sustain oscillation; therefore, if it can be ensured that the negative resistance requirement is met at start-up, then oscillation sustenance will not be an issue.

Figure 6-16 and Figure 6-17 show the variation between negative resistance and the crystal components for this device. As can be seen from the graphs, the crystal shunt capacitance (C0) and effective load capacitance (CL) greatly influence the negative resistance of the electrical oscillator. Note that these are typical graphs; so, refer to Table 6-5 for minimum and maximum values for design considerations.

6.12.3.4.3.3 Start-up Time

Start-up time is an important consideration when selecting the components of the crystal circuit. As mentioned in the Rneg – Negative Resistance section, for reliable start-up across all conditions, it is recommended that the Rneg > 3x ESR to 5x ESR of the crystal.

Crystal ESR and the dampening resistor (Rd) greatly affect the start-up time. The higher the two values, the longer the crystal takes to start up. Longer start-up times are usually a sign that the crystal and components are not a correct match.

Refer to Crystal Oscillator Specifications for the typical start-up times. Note that the numbers specified here are typical numbers provided for guidance only. Actual start-up time depends heavily on the crystal in question and the external components.

6.12.3.4.3.3.1 X1/X2 Precondition

On this device, the GPIO19/18 alternate functionality on X1/X2 can be used to speed up the start-up time of the crystal if needed. This functionality is achieved by preconditioning the load capacitors CL1 and CL2 to a known state before the XTAL is turned on. See the *TMS320F28003x Real-Time Microcontrollers Technical Reference Manual* for details.

Copyright © 2022 Texas Instruments Incorporated

6.12.3.4.3.4 DL – Drive Level

Drive level refers to how much power is provided by the electrical oscillator and dissipated by the crystal. The maximum drive level specified in the crystal manufacturer's data sheet is usually the maximum the crystal can dissipate without damage or significant reduction in operating life. On the other hand, the drive level specified by the electrical oscillator is the maximum power it can provide. The actual power provided by the electrical oscillator is not necessarily the maximum power and depends on the crystal and board components.

For cases where the actual drive level from the electrical oscillator exceeds the maximum drive level specification of the crystal, a dampening resistor (Rd) should be installed to limit the current and reduce the power dissipated by the crystal. Note that Rd reduces the circuit gain; and therefore, the actual value to use should be evaluated to make sure all other conditions for start-up and sustained oscillation are met.

6.12.3.4.4 How to Choose a Crystal

Using Crystal Oscillator Specifications as a reference:

1. Pick a crystal frequency (for example, 20 MHz).
2. Check that the ESR of the crystal <=50 Ω per specifications for 20 MHz.
3. Check that the load capacitance requirement of the crystal manufacturer is within 6 pF and 12 pF per specifications for 20 MHz.
   - As mentioned, CL1 and CL2 are in series; so, provided CL1 = CL2, effective load capacitance CL = [CL1]/2.
   - Adding board parasitics to this results in CL = [CL1]/2 + Cstray
4. Check that the maximum drive level of the crystal >= 1 mW. If this requirement is not met, a dampening resistor Rd can be used. Refer to DL – Drive Level on other points to consider when using Rd.

6.12.3.4.5 Testing

It is recommended that the user have the crystal manufacturer completely characterize the crystal with their board to ensure the crystal always starts up and maintains oscillation.

Below is a brief overview of some measurements that can be performed:

Due to how sensitive the crystal circuit is to capacitance, it is recommended that scope probes not be connected to X1 and X2. If scope probes must be used to monitor X1/X2, an active probe with <1-pF capacitance should be used.

Frequency

1. Bring out the XTAL on XCLKOUT.
2. Measure this frequency as the crystal frequency.

Negative Resistance

1. Bring out the XTAL on XCLKOUT.
2. Place a potentiometer in series with the crystal between the load capacitors.
3. Increase the resistance of the potentiometer until the clock on XCLKOUT stops.
4. This resistance plus the crystal's actual ESR is the negative resistance of the electrical oscillator.

Start-Up Time

1. Turn off the XTAL.
2. Bring out the XTAL on XCLKOUT.
3. Turn on the XTAL and measure how long it takes the clock on XCLKOUT to stay within 45% and 55% duty cycle.

6.12.3.4.6 Common Problems and Debug Tips

Crystal Fails to Start Up

- Go through the How to Choose a Crystal section and make sure there are no violations.

Crystal Takes a Long Time to Start Up

- If a dampening resistor Rd is installed, it is too high.

Copyright © 2022 Texas Instruments Incorporated

- If no dampening resistor is installed, either the crystal ESR is too high or the overall circuit gain is too low due to high load capacitance.

6.12.3.4.7 Crystal Oscillator Specifications

6.12.3.4.7.1 Crystal Oscillator Parameters

		MIN	MAX	UNIT
CL1, CL2	Load capacitance	12	24	pF
C0	Crystal shunt capacitance		7	pF

6.12.3.4.7.2 Crystal Equivalent Series Resistance (ESR) Requirements

For the Crystal Equivalent Series Resistance (ESR) Requirements table:

1. Crystal shunt capacitance (C0) should be less than or equal to 7 pF.
2. ESR = Negative Resistance/3

Table 6-5. Crystal Equivalent Series Resistance (ESR) Requirements

CRYSTAL FREQUENCY (MHz)	MAXIMUM ESR (Ω) (CL1 = CL2 = 12 pF)	MAXIMUM ESR (Ω) (CL1 = CL2 = 24 pF)
10	55	110
12	50	95
14	50	90
16	45	75
18	45	65
20	45	50

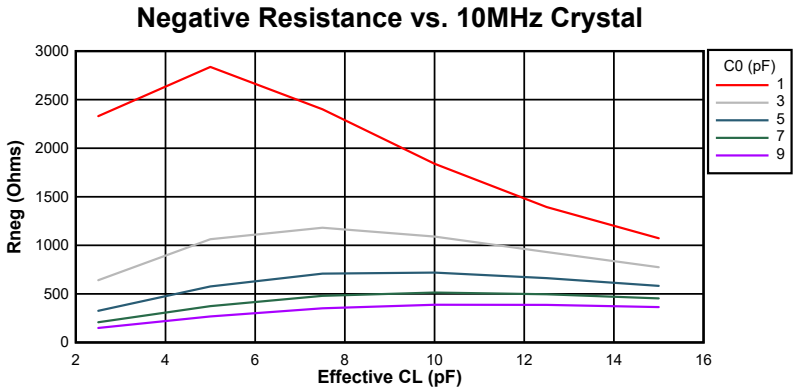

Figure 6-16. Negative Resistance Variation at 10 MHz

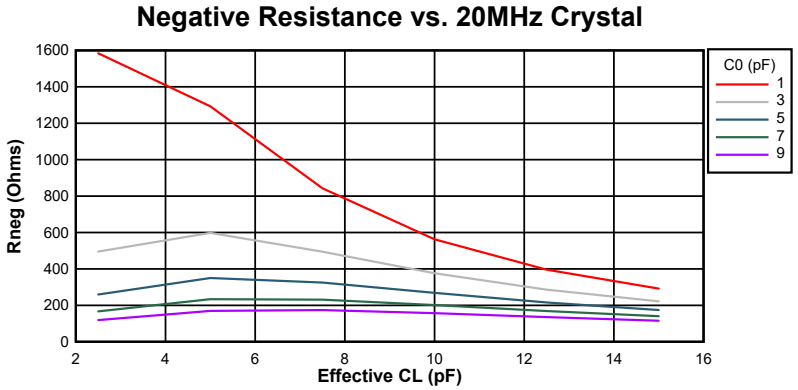

Figure 6-17. Negative Resistance Variation at 20 MHz

Copyright © 2022 Texas Instruments Incorporated

6.12.3.4.7.3 Crystal Oscillator Electrical Characteristics

over recommended operating conditions (unless otherwise noted)

PARAMETER		TEST CONDITIONS	MIN	TYP	MAX	UNIT
Start-up time[1]	f = 10 MHz	ESR MAX = 110 Ω CL1 = CL2 = 24 pF C0 = 7 pF		4		ms
	f = 20 MHz	ESR MAX = 50 Ω CL1 = CL2 = 24 pF C0 = 7 pF		2		ms
Crystal drive level (DL)					1	mW

(1) Start-up time is dependent on the crystal and tank circuit components. TI recommends that the crystal vendor characterize the application with the chosen crystal.

Copyright © 2022 Texas Instruments Incorporated

6.12.3.5 Internal Oscillators

To reduce production board costs and application development time, all F28003x devices contain two independent internal oscillators, referred to as INTOSC1 and INTOSC2. By default, INTOSC2 is set as the source for the system reference clock (OSCCLK) and INTOSC1 is set as the backup clock source.

Applications requiring tighter **SCI baud rate matching** can use the SCI baud tuning example (baud_tune_via_uart) available in C2000Ware.

6.12.3.5.1 INTOSC Characteristics

over recommended operating conditions (unless otherwise noted)

PARAMETER		TEST CONDITIONS	MIN	TYP	MAX	UNIT
f_{INTOSC}	Frequency, INTOSC1 and INTOSC2(1)	-40℃ to 125℃	9.82 (-1.8%)	10	10.1 (1.0%)	MHz
		-30℃ to 90℃	9.86 (-1.4%)	10		
		-10℃ to 85℃	9.9 (-1.0%)	10		
$f_{INTOSC-STABILITY}$	Frequency stability at room temperature	30°C, Nominal VDD		±0.1		%
$t_{INT0SC-ST}$	Start-up and settling time				20	µs

(1) INTOSC frequency may shift due to the thermal and mechanical stress of solder reflow. A post-reflow bake can restore the unit to its original datasheet performance.

Copyright © 2022 Texas Instruments Incorporated

6.12.4 Flash Parameters

Table 6-6 lists the minimum required Flash wait states with different clock sources and frequencies. Wait state is the value set in register FRDCNTL[RWAIT].

Table 6-6. Minimum Required Flash Wait States with Different Clock Sources and Frequencies

CPUCLK (MHz)	EXTERNAL OSCILLATOR OR CRYSTAL		INTOSC1 OR INTOSC2	
	NORMAL OPERATION	BANK OR PUMP SLEEP(1)	NORMAL OPERATION	BANK OR PUMP SLEEP(1)
116 < CPUCLK ≤ 120	5		5	6
100 < CPUCLK ≤ 116				5
97 < CPUCLK ≤ 100	4		4	5
80 < CPUCLK ≤ 97				4
77 < CPUCLK ≤ 80	3		3	4
60 < CPUCLK ≤ 77				3
58 < CPUCLK ≤ 60	2		2	3
40 < CPUCLK ≤ 58				2
38 < CPUCLK ≤ 40	1		1	2
20 < CPUCLK ≤ 38				1
19 < CPUCLK ≤ 20	0		0	1
CPUCLK ≤ 19				0

(1) Flash SLEEP operations require an extra wait state when using INTOSC as the clock source for the frequency ranges indicated. Any wait state FRDCNTL[RWAIT] change must be made before beginning a SLEEP mode operation. This setting impacts both flash banks.

The F28003x devices have an improved 128-bit prefetch buffer that provides high flash code execution efficiency across wait states. Figure 6-18 and Figure 6-19 illustrate typical efficiency across wait-state settings compared to previous-generation devices with a 64-bit prefetch buffer. Wait-state execution efficiency with a prefetch buffer will depend on how many branches are present in application software. Two examples of linear code and if-then-else code are provided.

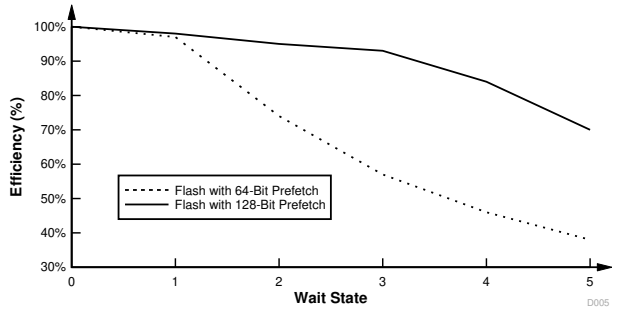

Figure 6-18. Application Code With Heavy 32-Bit Floating-Point Math Instructions

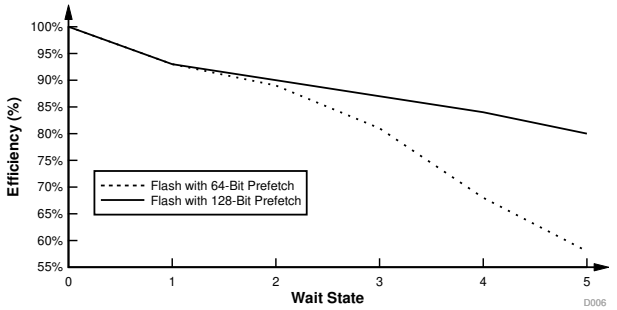

Figure 6-19. Application Code With 16-Bit If-Else Instructions

Copyright © 2022 Texas Instruments Incorporated

Section 6.12.4.1 lists the Flash parameters.

Note

The Main Array flash programming must be aligned to 64-bit address boundaries and each 64-bit word may only be programmed once per write/erase cycle.

Note

It is important to provide the correct sector mask for the bank erase command. If the mask is mistakenly chosen to erase an inaccessible sector (belongs to another security zone), the bank erase command will continue attempting to erase the sector endlessly and the FSM will never exit (since erase will not succeed). To avoid such a situation, user must take care to provide the correct mask. However, given that there is a chance of choosing an incorrect mask, TI suggests to initialize the max allowed erase pulses to zero after the max number of pulses are issued by the FSM for the bank erase operation. This will ensure that the FSM will end the bank erase command after trying to erase the inaccessible sector up to the max allowed erase pulses.

The Example_EraseBanks() function in the C2000Ware's flash API usage example depicts the implementation of this sequence (content of the while loop waiting for the FSM to complete the bank erase command). Users must use this code as-is irrespective of whether or not security is used by the application to also ensure that the FSM exits from bank erase operations in case of an erase-failure.

6.12.4.1 Flash Parameters

PARAMETER			MIN	TYP	MAX	UNIT
Program Time(1)		128 data bits + 16 ECC bits		150	300	µs
		8KB (Sector)		50	100	ms
Sector EraseTime(2) (3)	< 25 cycles	8KB (Sector)		15	56	ms
	1k cycles			26	133	ms
	2k cycles			31	226	ms
	20k cycles			123	1026	ms
Bank EraseTime(2) (3)	< 25 cycles	128KB (Bank)		21	78	ms
	1k cycles			35	183	ms
	2k cycles			42	310	ms
	20k cycles			169	1410	ms
N_{wec} Write/Erase Cycles per Sector					20000	cycles
N_{wec} Write/Erase Cycles for Entire Flash (Combined for all Sectors)					100000	cycles
$t_{retention}$ Data retention duration at T_J = 85°C			20			years

(1) Program time is at the maximum device frequency. Program time includes overhead of the flash state machine but does not include the time to transfer the following into RAM:
- Code that uses flash API to program the flash
- Flash API itself
- Flash data to be programmed

In other words, the time indicated in this table is applicable after all the required code/data is available in the device RAM, ready for programming. The transfer time will significantly vary depending on the speed of the JTAG debug probe used.
Program time calculation is based on programming 144 bits at a time at the specified operating frequency. Program time includes Program verify by the CPU. The program time does not degrade with write/erase (W/E) cycling, but the erase time does.
Erase time includes Erase verify by the CPU and does not involve any data transfer.

(2) Erase time includes Erase verify by the CPU.

(3) The on-chip flash memory is in an erased state when the device is shipped from TI. As such, erasing the flash memory is not required prior to programming, when programming the device for the first time. However, the erase operation is needed on all subsequent programming operations.

Copyright © 2022 Texas Instruments Incorporated

6.12.5 Emulation/JTAG

The JTAG (IEEE Standard 1149.1-1990 Standard Test Access Port and Boundary Scan Architecture) port has four dedicated pins: TMS, TDI, TDO, and TCK. The cJTAG (IEEE Standard 1149.7-2009 for Reduced-Pin and Enhanced-Functionality Test Access Port and Boundary-Scan Architecture) port is a compact JTAG interface requiring only two pins (TMS and TCK), which allows other device functionality to be muxed to the traditional GPIO35 (TDI) and GPIO37 (TDO) pins.

Typically, no buffers are needed on the JTAG signals when the distance between the MCU target and the JTAG header is smaller than 6 inches (15.24 cm), and no other devices are present on the JTAG chain. Otherwise, each signal should be buffered. Additionally, for most JTAG debug probe operations at 10 MHz, no series resistors are needed on the JTAG signals. However, if high emulation speeds are expected (35 MHz or so), 22-Ω resistors should be placed in series on each JTAG signal.

The PD (Power Detect) pin of the JTAG debug probe header should be connected to the board's 3.3-V supply. Header GND pins should be connected to board ground. TDIS (Cable Disconnect Sense) should also be connected to board ground. The JTAG clock should be looped from the header TCK output pin back to the RTCK input pin of the header (to sense clock continuity by the JTAG debug probe). This MCU does not support the EMU0 and EMU1 signals that are present on 14-pin and 20-pin emulation headers. These signals should always be pulled up at the emulation header through a pair of board pullup resistors ranging from 2.2 kΩ to 4.7 kΩ (depending on the drive strength of the debugger ports). Typically, a 2.2-kΩ value is used.

Header pin $\overline{\text{RESET}}$ is an open-drain output from the JTAG debug probe header that enables board components to be reset through JTAG debug probe commands (available only through the 20-pin header). Figure 6-20 shows how the 14-pin JTAG header connects to the MCU's JTAG port signals. Figure 6-21 shows how to connect to the 20-pin JTAG header. The 20-pin JTAG header pins EMU2, EMU3, and EMU4 are not used and should be grounded.

For more information about hardware breakpoints and watchpoints, see Hardware Breakpoints and Watchpoints in CCS for C2000 devices.

For more information about JTAG emulation, see the *XDS Target Connection Guide*.

Note

JTAG Test Data Input (TDI) is the default mux selection for the pin. The internal pullup is disabled by default. If this pin is used as JTAG TDI, the internal pullup should be enabled or an external pullup added on the board to avoid a floating input. In the cJTAG option, this pin can be used as GPIO.

JTAG Test Data Output (TDO) is the default mux selection for the pin. The internal pullup is disabled by default. The TDO function will be in a tri-state condition when there is no JTAG activity, leaving this pin floating. The internal pullup should be enabled or an external pullup added on the board to avoid a floating GPIO input. In the cJTAG option, this pin can be used as GPIO.

Copyright © 2022 Texas Instruments Incorporated

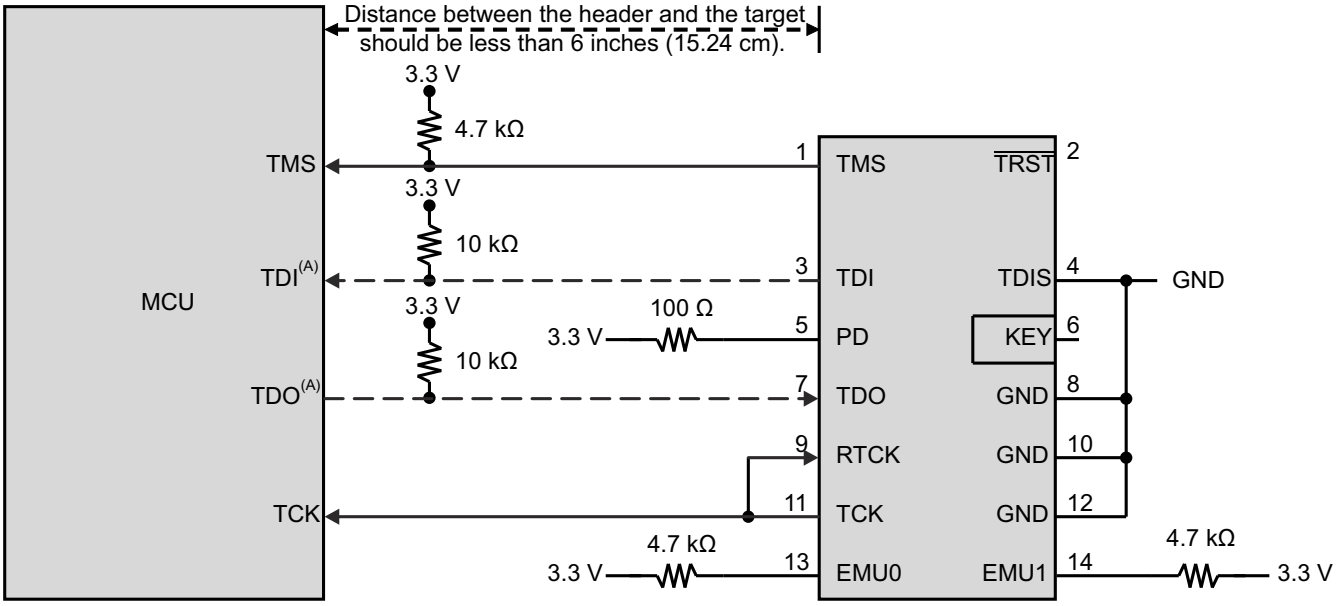

A. TDI and TDO connections are not required for cJTAG option and these pins can be used as GPIOs instead.

Figure 6-20. Connecting to the 14-Pin JTAG Header

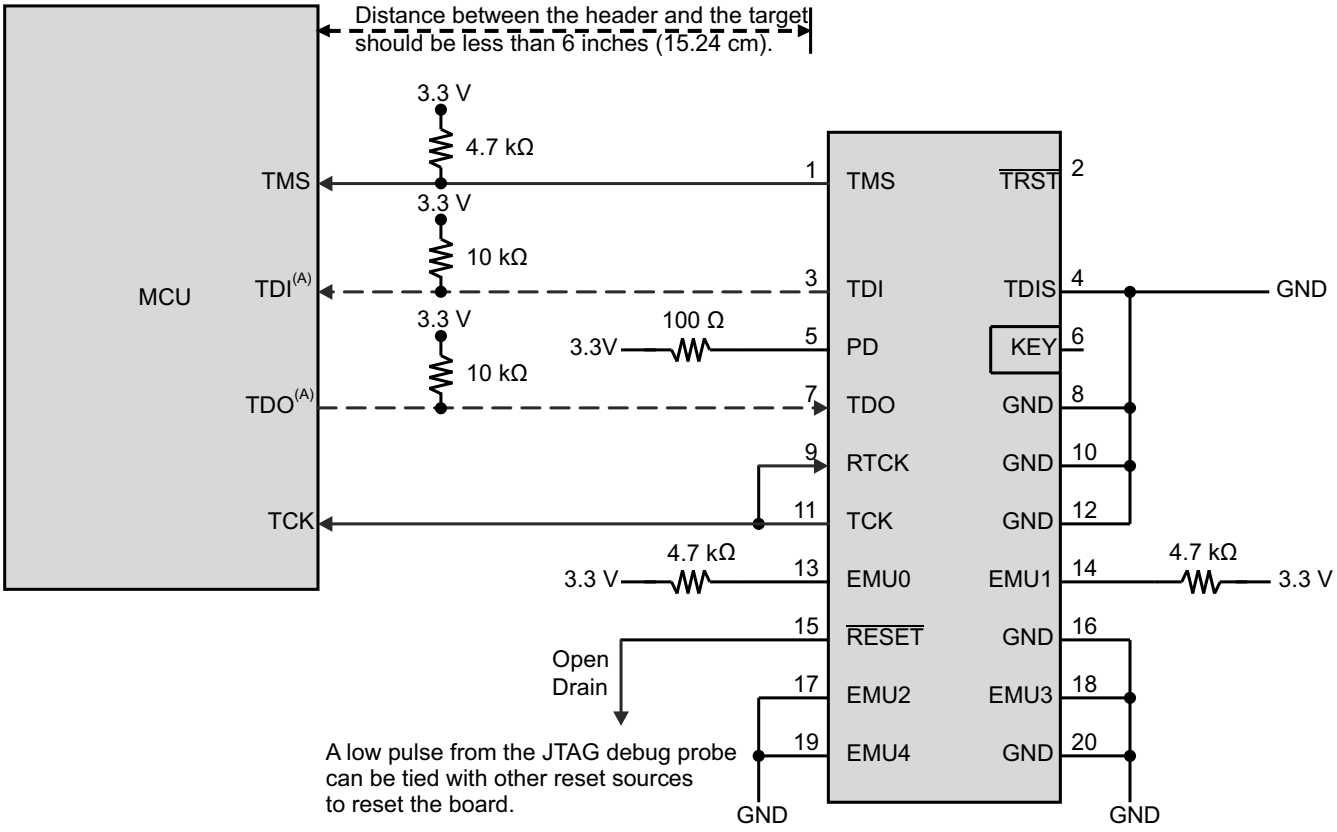

A. TDI and TDO connections are not required for cJTAG option and these pins can be used as GPIOs instead.

Figure 6-21. Connecting to the 20-Pin JTAG Header

6.12.5.1 JTAG Electrical Data and Timing

6.12.5.1.1 JTAG Timing Requirements

NO.			MIN	MAX	UNIT
1	$t_{c(TCK)}$	Cycle time, TCK	66.66		ns
1a	$t_{w(TCKH)}$	Pulse duration, TCK high (40% of t_c)	26.66		ns
1b	$t_{w(TCKL)}$	Pulse duration, TCK low (40% of t_c)	26.66		ns
3	$t_{su(TDI-TCKH)}$	Input setup time, TDI valid to TCK high	7		ns
	$t_{su(TMS-TCKH)}$	Input setup time, TMS valid to TCK high	7		
4	$t_{h(TCKH-TDI)}$	Input hold time, TDI valid from TCK high	7		ns
	$t_{h(TCKH-TMS)}$	Input hold time, TMS valid from TCK high	7		

6.12.5.1.2 JTAG Switching Characteristics

over recommended operating conditions (unless otherwise noted)

NO.	PARAMETER		MIN	MAX	UNIT
2	$t_{d(TCKL-TDO)}$	Delay time, TCK low to TDO valid	6	20	ns

6.12.5.1.3 JTAG Timing Diagram

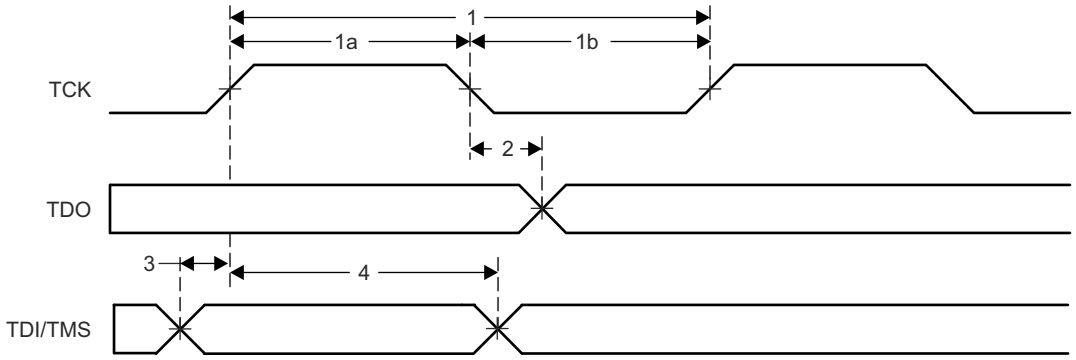

Figure 6-22. JTAG Timing

Copyright © 2022 Texas Instruments Incorporated

6.12.5.2 cJTAG Electrical Data and Timing

6.12.5.2.1 cJTAG Timing Requirements

NO.			MIN	MAX	UNIT
1	$t_{c(TCK)}$	Cycle time, TCK	100		ns
1a	$t_{w(TCKH)}$	Pulse duration, TCK high (40% of t_c)	40		ns
1b	$t_{w(TCKL)}$	Pulse duration, TCK low (40% of t_c)	40		ns
3	$t_{su(TMS-TCKH)}$	Input setup time, TMS valid to TCK high	7		ns
	$t_{su(TMS-TCKL)}$	Input setup time, TMS valid to TCK low	7		ns
4	$t_{h(TCKH-TMS)}$	Input hold time, TMS valid from TCK high	2		ns
	$t_{h(TCKL-TMS)}$	Input hold time, TMS valid from TCK low	2		ns

6.12.5.2.2 cJTAG Switching Characteristics

over recommended operating conditions (unless otherwise noted)

NO.	PARAMETER		MIN	MAX	UNIT
2	$t_{d(TCKL-TMS)}$	Delay time, TCK low to TMS valid	5	20	ns
5	$t_{dis(TCKH-TMS)}$	Delay time, TCK high to TMS disable		20	ns

6.12.5.2.3 cJTAG Timing Diagram

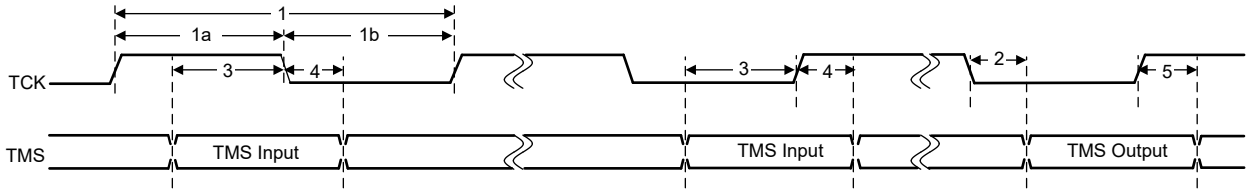

Figure 6-23. cJTAG Timing

6.12.6 GPIO Electrical Data and Timing

The peripheral signals are multiplexed with general-purpose input/output (GPIO) signals. On reset, GPIO pins are configured as inputs. For specific inputs, the user can also select the number of input qualification cycles to filter unwanted noise glitches.

The GPIO module contains an Output X-BAR which allows an assortment of internal signals to be routed to a GPIO in the GPIO mux positions denoted as OUTPUTXBARx. The GPIO module also contains an Input X-BAR which is used to route signals from any GPIO input to different IP blocks such as the ADCs, eCAPs, ePWMs, and external interrupts. For more details, see the X-BAR chapter in the *TMS320F28003x Real-Time Microcontrollers Technical Reference Manual*.

6.12.6.1 GPIO – Output Timing

6.12.6.1.1 General-Purpose Output Switching Characteristics

over recommended operating conditions (unless otherwise noted)

PARAMETER			MIN	MAX	UNIT
$t_{r(GPO)}$	Rise time, GPIO switching low to high	All GPIOs		8(1)	ns
$t_{f(GPO)}$	Fall time, GPIO switching high to low	All GPIOs		8(1)	ns
t_{fGPO}	Toggling frequency, GPIO pins			50	MHz

(1) Rise time and fall time vary with load. These values assume a 20-pF load.

6.12.6.1.2 General-Purpose Output Timing Diagram

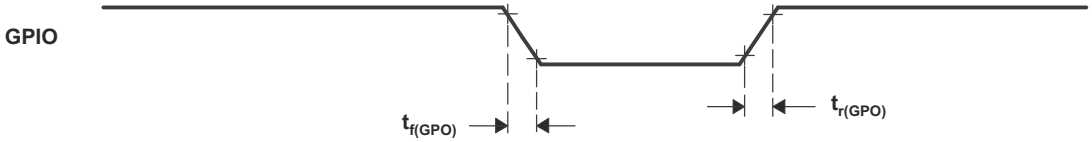

Figure 6-24. General-Purpose Output Timing

Copyright © 2022 Texas Instruments Incorporated

6.12.6.2 GPIO – Input Timing

6.12.6.2.1 General-Purpose Input Timing Requirements

			MIN	MAX	UNIT
$t_{w(SP)}$	Sampling period	QUALPRD = 0	$1t_{c(SYSCLK)}$		cycles
		QUALPRD ≠ 0	$2t_{c(SYSCLK)}$ * QUALPRD		cycles
$t_{w(IQSW)}$	Input qualifier sampling window		$t_{w(SP)}$ * (n(1) – 1)		cycles
$t_{w(GPI)}$ (2)	Pulse duration, GPIO low/high	Synchronous mode	$2t_{c(SYSCLK)}$		cycles
		With input qualifier	$t_{w(IQSW)} + t_{w(SP)} + 1t_{c(SYSCLK)}$		cycles

(1) "n" represents the number of qualification samples as defined by GPxQSELn register.
(2) For $t_{w(GPI)}$, pulse width is measured from V_{IL} to V_{IL} for an active low signal and V_{IH} to V_{IH} for an active high signal.

6.12.6.2.2 Sampling Mode

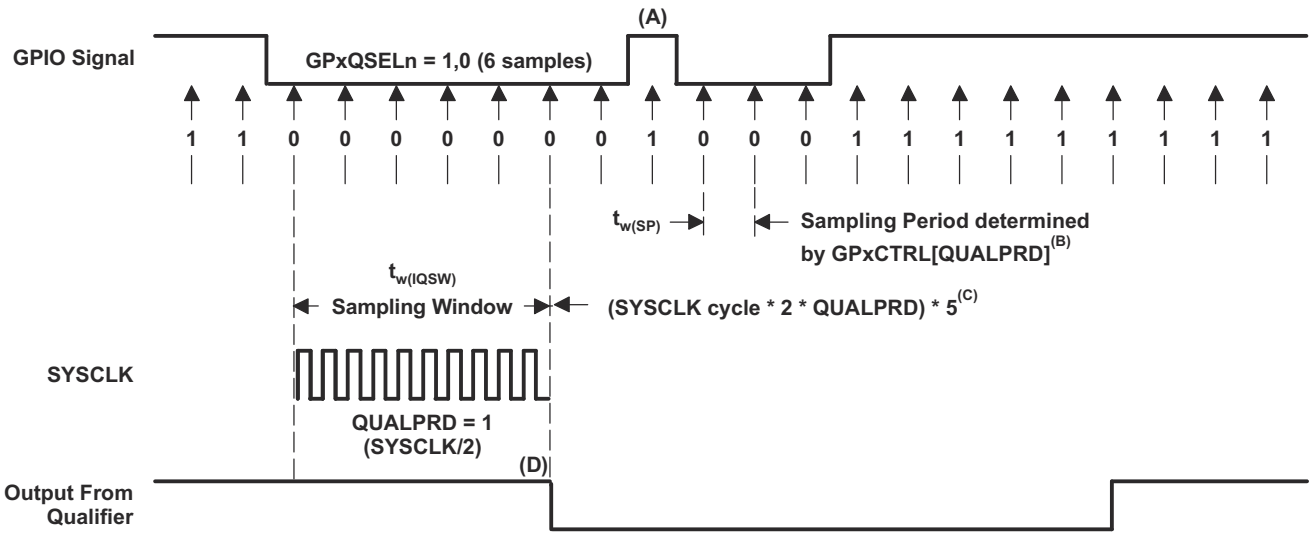

A. This glitch will be ignored by the input qualifier. The QUALPRD bit field specifies the qualification sampling period. It can vary from 00 to 0xFF. If QUALPRD = 00, then the sampling period is 1 SYSCLK cycle. For any other value "n", the qualification sampling period in 2n SYSCLK cycles (that is, at every 2n SYSCLK cycles, the GPIO pin will be sampled).
B. The qualification period selected through the GPxCTRL register applies to groups of eight GPIO pins.
C. The qualification block can take either three or six samples. The GPxQSELn Register selects which sample mode is used.
D. In the example shown, for the qualifier to detect the change, the input should be stable for 10 SYSCLK cycles or greater. In other words, the inputs should be stable for (5 × QUALPRD × 2) SYSCLK cycles. This would ensure 5 sampling periods for detection to occur. Because external signals are driven asynchronously, an 13-SYSCLK-wide pulse ensures reliable recognition.

Figure 6-25. Sampling Mode

Copyright © 2022 Texas Instruments Incorporated

6.12.6.3 Sampling Window Width for Input Signals

The following section summarizes the sampling window width for input signals for various input qualifier configurations.

Sampling frequency denotes how often a signal is sampled with respect to SYSCLK.

Sampling frequency = SYSCLK/(2 × QUALPRD), if QUALPRD ≠ 0

Sampling frequency = SYSCLK, if QUALPRD = 0

Sampling period = SYSCLK cycle × 2 × QUALPRD, if QUALPRD ≠ 0

In the previous equations, SYSCLK cycle indicates the time period of SYSCLK.

Sampling period = SYSCLK cycle, if QUALPRD = 0

In a given sampling window, either 3 or 6 samples of the input signal are taken to determine the validity of the signal. This is determined by the value written to GPxQSELn register.

Case 1:

Qualification using 3 samples

Sampling window width = (SYSCLK cycle × 2 × QUALPRD) × 2, if QUALPRD ≠ 0

Sampling window width = (SYSCLK cycle) × 2, if QUALPRD = 0

Case 2:

Qualification using 6 samples

Sampling window width = (SYSCLK cycle × 2 × QUALPRD) × 5, if QUALPRD ≠ 0

Sampling window width = (SYSCLK cycle) × 5, if QUALPRD = 0

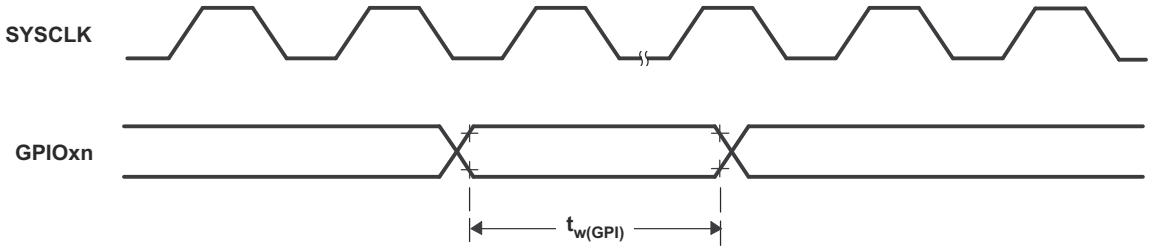

Figure 6-26. General-Purpose Input Timing

Copyright © 2022 Texas Instruments Incorporated

6.12.7 Interrupts

The C28x CPU has fourteen peripheral interrupt lines. Two of them (INT13 and INT14) are connected directly to CPU timers 1 and 2, respectively. The remaining twelve are connected to peripheral interrupt signals through the enhanced Peripheral Interrupt Expansion (ePIE) module. The ePIE multiplexes up to sixteen peripheral interrupts into each CPU interrupt line. It also expands the vector table to allow each interrupt to have its own ISR. This allows the CPU to support a large number of peripherals.

An interrupt path is divided into three stages—the peripheral, the ePIE, and the CPU. Each stage has its own enable and flag registers. This system allows the CPU to handle one interrupt while others are pending, implement and prioritize nested interrupts in software, and disable interrupts during certain critical tasks.

Figure 6-27 shows the interrupt architecture for this device.

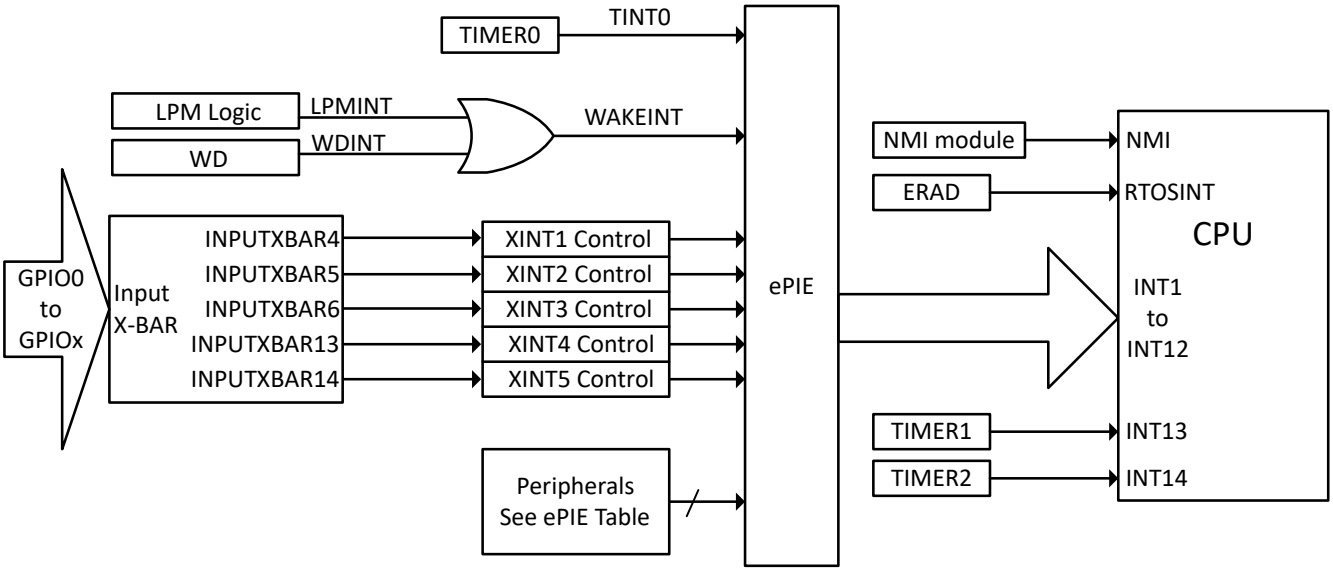

Figure 6-27. Device Interrupt Architecture

6.12.7.1 External Interrupt (XINT) Electrical Data and Timing

For an explanation of the input qualifier parameters, see the General-Purpose Input Timing Requirements table.

6.12.7.1.1 External Interrupt Timing Requirements

			MIN	MAX	UNIT
$t_{w(INT)}$	Pulse duration, INT input low/high	Synchronous	$2t_{c(SYSCLK)}$		cycles
		With qualifier	$t_{w(IQSW)} + t_{w(SP)} + 1t_{c(SYSCLK)}$		cycles

6.12.7.1.2 External Interrupt Switching Characteristics

over recommended operating conditions (unless otherwise noted)

PARAMETER		MIN	MAX	UNIT
$t_{d(INT)}$	Delay time, INT low/high to interrupt-vector fetch(1)	$t_{w(IQSW)} + 14t_{c(SYSCLK)}$	$t_{w(IQSW)} + t_{w(SP)} + 14t_{c(SYSCLK)}$	cycles

(1) This assumes that the ISR is in a single-cycle memory.

6.12.7.1.3 External Interrupt Timing

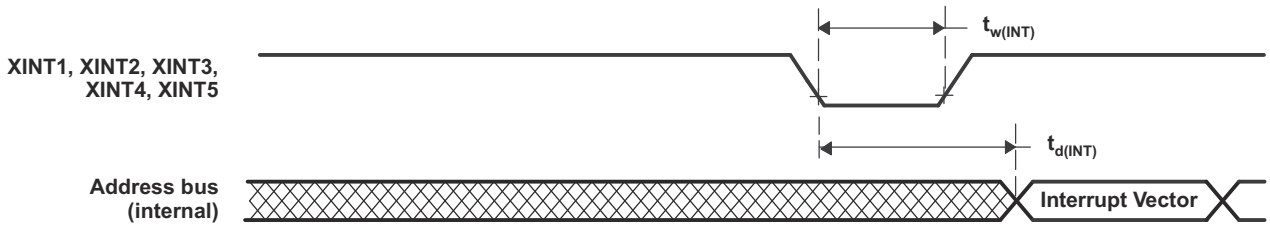

Figure 6-28. External Interrupt Timing

Copyright © 2022 Texas Instruments Incorporated

6.12.8 Low-Power Modes

This device has HALT, IDLE and STANDBY as clock-gating low-power modes.

Further details, as well as the entry and exit procedure, for all of the low-power modes can be found in the Low Power Modes section of the *TMS320F28003x Real-Time Microcontrollers Technical Reference Manual*.

6.12.8.1 Clock-Gating Low-Power Modes

IDLE and HALT modes on this device are similar to those on other C28x devices. Table 6-7 describes the effect on the system when any of the clock-gating low-power modes are entered.

Table 6-7. Effect of Clock-Gating Low-Power Modes on the Device

MODULES/ CLOCK DOMAIN	IDLE	STANDBY	HALT
SYSCLK	Active	Gated	Gated
CPUCLK	Gated	Gated	Gated
Clock to modules connected to PERx.SYSCLK	Active	Gated	Gated
WDCLK	Active	Active	Gated if CLKSRCCTL1.WDHALTI = 0
PLL	Powered	Powered	Software must power down PLL before entering HALT.
INTOSC1	Powered	Powered	Powered down if CLKSRCCTL1.WDHALTI = 0
INTOSC2	Powered	Powered	Powered down if CLKSRCCTL1.WDHALTI = 0
Flash(1)	Powered	Powered	Powered
XTAL(2)	Powered	Powered	Powered

(1) The Flash module is not powered down by hardware in any LPM. It may be powered down using software if required by the application. For more information, see the Flash and OTP Memory section of the System Control chapter in the *TMS320F28003x Real-Time Microcontrollers Technical Reference Manual*.

(2) The XTAL is not powered down by hardware in any LPM. It may be powered down by software setting the XTALCR.OSCOFF bit to 1. This can be done at any time during the application if the XTAL is not required.

Copyright © 2022 Texas Instruments Incorporated

6.12.8.2 Low-Power Mode Wake-up Timing

For an explanation of the input qualifier parameters, see the General-Purpose Input Timing Requirements table.

6.12.8.2.1 IDLE Mode Timing Requirements

			MIN	MAX	UNIT
$t_{w(WAKE)}$	Pulse duration, external wake-up signal	Without input qualifier	$2t_{c(SYSCLK)}$		cycles
		With input qualifier	$2t_{c(SYSCLK)} + t_{w(IQSW)}$		

6.12.8.2.2 IDLE Mode Switching Characteristics

over recommended operating conditions (unless otherwise noted)

PARAMETER			TEST CONDITIONS	MIN	MAX	UNIT
$t_{d(WAKE-IDLE)}$	Delay time, external wake signal to program execution resume(1)	From Flash (active state)	Without input qualifier		$40t_{c(SYSCLK)}$	cycles
			With input qualifier		$40t_{c(SYSCLK)} + t_{w(WAKE)}$	cycles
		From Flash (sleep state)	Without input qualifier		$9316t_{c(SYSCLK)}$ (2)	cycles
			With input qualifier		$9316t_{c(SYSCLK)}$ (2) $+ t_{w(WAKE)}$	cycles
		From RAM	Without input qualifier		$25t_{c(SYSCLK)}$	cycles
			With input qualifier		$25t_{c(SYSCLK)} + t_{w(WAKE)}$	cycles

(1) This is the time taken to begin execution of the instruction that immediately follows the IDLE instruction. Execution of an ISR (triggered by the wake-up signal) involves additional latency.
(2) This value is based on the flash power-up time, which is a function of the SYSCLK frequency, flash wait states (RWAIT), and FPAC1[PSLEEP].

6.12.8.2.3 IDLE Entry and Exit Timing Diagram

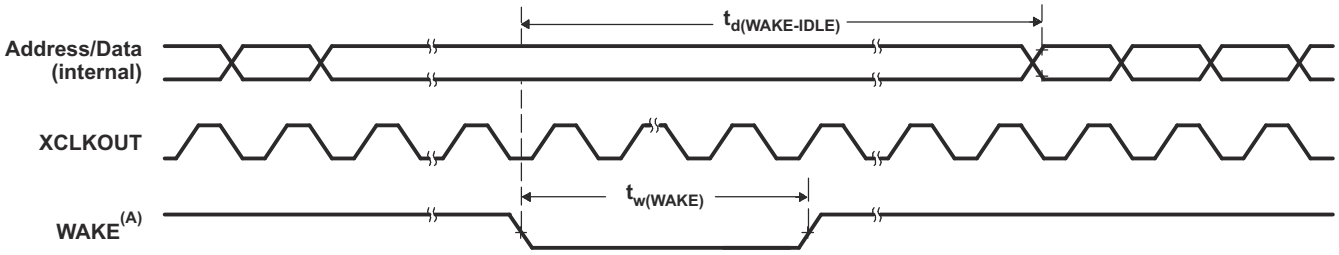

A. WAKE can be any enabled interrupt, $\overline{\text{WDINT}}$ or XRSn. After the IDLE instruction is executed, a delay of five OSCCLK cycles (minimum) is needed before the wake-up signal could be asserted.

Figure 6-29. IDLE Entry and Exit Timing Diagram

Copyright © 2022 Texas Instruments Incorporated

6.12.8.2.4 STANDBY Mode Timing Requirements

			MIN	MAX	UNIT
$t_{w(WAKE-INT)}$	Pulse duration, external wake-up signal	QUALSTDBY = 0 | $2t_{c(OSCCLK)}$	$3t_{c(OSCCLK)}$		cycles
		QUALSTDBY > 0 | (2 + QUALSTDBY)$t_{c(OSCCLK)}$ (1)	(2 + QUALSTDBY) * $t_{c(OSCCLK)}$		

(1) QUALSTDBY is a 6-bit field in the LPMCR register.

6.12.8.2.5 STANDBY Mode Switching Characteristics

over recommended operating conditions (unless otherwise noted)

PARAMETER		TEST CONDITIONS	MIN	MAX	UNIT
$t_{d(IDLE-XCOS)}$	Delay time, IDLE instruction executed to XCLKOUT stop			$16t_{c(INTOSC1)}$	cycles
$t_{d(WAKE-STBY)}$	Delay time, external wake signal to program execution resume(1)	Wakeup from flash (Flash module in active state)		$175t_{c(SYSCLK)} + t_{w(WAKE-INT)}$	cycles
$t_{d(WAKE-STBY)}$		Wakeup from flash (Flash module in sleep state)		$9316t_{c(SYSCLK)}$ (2) $+ t_{w(WAKE-INT)}$	cycles
$t_{d(WAKE-STBY)}$		Wakeup from RAM		$3t_{c(OSC)} + 15t_{c(SYSCLK)} + t_{w(WAKE-INT)}$	cycles

(1) This is the time taken to begin execution of the instruction that immediately follows the IDLE instruction. Execution of an ISR (triggered by the wake-up signal) involves additional latency.
(2) This value is based on the flash power-up time, which is a function of the SYSCLK frequency, flash wait states (RWAIT), and FPAC1[PSLEEP].

6.12.8.2.6 STANDBY Entry and Exit Timing Diagram

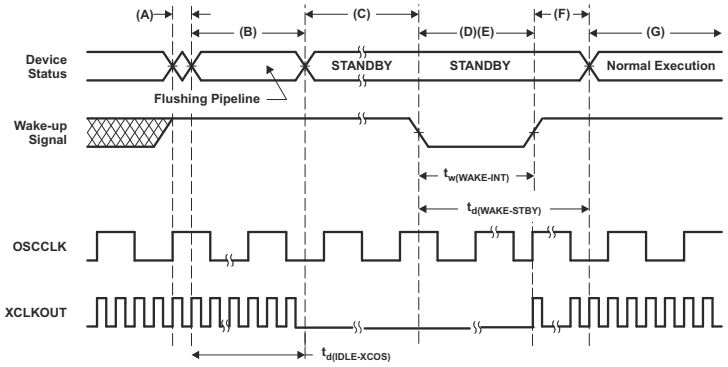

A. IDLE instruction is executed to put the device into STANDBY mode.
B. The LPM block responds to the STANDBY signal, SYSCLK is held for a maximum 16 INTOSC1 clock cycles before being turned off. This delay enables the CPU pipeline and any other pending operations to flush properly.
C. Clock to the peripherals are turned off. However, the PLL and watchdog are not shut down. The device is now in STANDBY mode. After the IDLE instruction is executed, a delay of five OSCCLK cycles (minimum) is needed before the wake-up signal could be asserted.
D. The external wake-up signal is driven active.
E. The wake-up signal fed to a GPIO pin to wake up the device must meet the minimum pulse width requirement. Furthermore, this signal must be free of glitches. If a noisy signal is fed to a GPIO pin, the wakeup behavior of the device will not be deterministic and the device may not exit low-power mode for subsequent wakeup pulses.
F. After a latency period, the STANDBY mode is exited.
G. Normal execution resumes. The device will respond to the interrupt (if enabled).

Figure 6-30. STANDBY Entry and Exit Timing Diagram

Copyright © 2022 Texas Instruments Incorporated

6.12.8.2.7 HALT Mode Timing Requirements

		MIN	MAX	UNIT
$t_{w(WAKE-GPIO)}$	Pulse duration, GPIO wake-up signal[1]	t_{oscst} + $2t_{c(OSCCLK)}$		cycles
$t_{w(WAKE-XRS)}$	Pulse duration, $\overline{XRS}$ wake-up signal[1]	t_{oscst} + $8t_{c(OSCCLK)}$		cycles

(1) For applications using X1/X2 for OSCCLK, the user must characterize their specific oscillator start-up time as it is dependent on circuit/layout external to the device. See *Crystal Oscillator (XTAL)* section for more information. For applications using INTOSC1 or INTOSC2 for OSCCLK, see the Internal Oscillators section for t_{oscst}. Oscillator start-up time does not apply to applications using a single-ended crystal on the X1 pin, as it is powered externally to the device.

6.12.8.2.8 HALT Mode Switching Characteristics

over recommended operating conditions (unless otherwise noted)

PARAMETER		MIN	MAX	UNIT
$t_{d(IDLE-XCOS)}$	Delay time, IDLE instruction executed to XCLKOUT stop		$16t_{c(INTOSC1)}$	cycles
$t_{d(WAKE-HALT)}$	Delay time, external wake signal end to CPU1 program execution resume			cycles
	Wakeup from Flash - Flash module in active state		$75t_{c(OSCCLK)}$	
	Wakeup from Flash - Flash module in sleep state		$9316t_{c(SYSCLK)}$+$75t_{c(OSCCLK)}$ [1]	
	Wakeup from RAM		$75t_{c(OSCCLK)}$	

(1) This value is based on the flash power-up time, which is a function of the SYSCLK frequency, flash wait states (RWAIT), and FPAC1[PSLEEP].

Copyright © 2022 Texas Instruments Incorporated

6.12.8.2.9 HALT Entry and Exit Timing Diagram

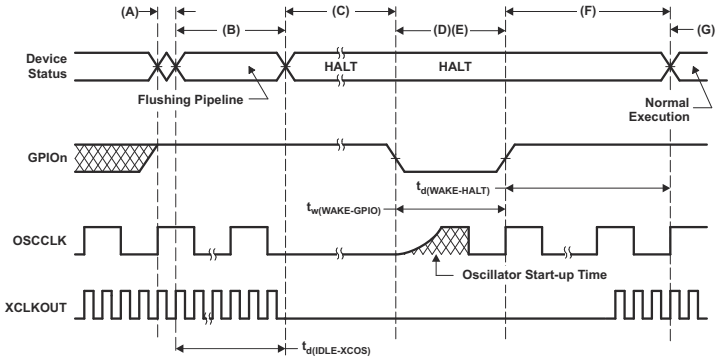

A. IDLE instruction is executed to put the device into HALT mode.
B. The LPM block responds to the HALT signal, SYSCLK is held for a maximum 16 INTOSC1 clock cycles before being turned off. This delay enables the CPU pipeline and any other pending operations to flush properly.
C. Clocks to the peripherals are turned off and the PLL is shut down. If a quartz crystal or ceramic resonator is used as the clock source, the internal oscillator is shut down as well. The device is now in HALT mode and consumes very little power. It is possible to keep the zero-pin internal oscillators (INTOSC1 and INTOSC2) and the watchdog alive in HALT MODE. This is done by writing 1 to CLKSRCCTL1.WDHALTI. After the IDLE instruction is executed, a delay of five OSCCLK cycles (minimum) is needed before the wake-up signal could be asserted.
D. When the GPIOn pin (used to bring the device out of HALT) is driven low, the oscillator is turned on and the oscillator wake-up sequence is initiated. The GPIO pin should be driven high only after the oscillator has stabilized. This enables the provision of a clean clock signal during the PLL lock sequence. Because the falling edge of the GPIO pin asynchronously begins the wake-up procedure, care should be taken to maintain a low noise environment before entering and during HALT mode.
E. The wake-up signal fed to a GPIO pin to wake up the device must meet the minimum pulse width requirement. Furthermore, this signal must be free of glitches. If a noisy signal is fed to a GPIO pin, the wake-up behavior of the device will not be deterministic and the device may not exit low-power mode for subsequent wake-up pulses.
F. When CLKIN to the core is enabled, the device will respond to the interrupt (if enabled), after some latency. The HALT mode is now exited.
G. Normal operation resumes.
H. The user must relock the PLL upon HALT wakeup to ensure a stable PLL lock.

Figure 6-31. HALT Entry and Exit Timing Diagram

Copyright © 2022 Texas Instruments Incorporated

6.13 Analog Peripherals

The analog subsystem module is described in this section.

The analog modules on this device include the ADC, temperature sensor, CMPSS, and buffered DAC.

The analog subsystem has the following features:

- Flexible voltage references
  - The ADCs are referenced to VREFHIx and VSSA pins
    - VREFHIx pin voltage can be driven in externally or can be generated by an internal bandgap voltage reference
    - The internal voltage reference range can be selected to be 0V to 3.3V or 0V to 2.5V
  - The buffered DACs are referenced to VREFHIx and VSSA
    - Alternately, these DACs can be referenced to the VDAC pin and VSSA
  - The comparator DACs are referenced to VDDA and VSSA
    - Alternately, these DACs can be referenced to the VDAC pin and VSSA
- Flexible pin usage
  - Buffered DAC outputs, comparator subsystem inputs, and digital inputs (AIOs)/outputs (AGPIOs) are multiplexed with ADC inputs
  - Internal connection to V_{REFLO} on all ADCs for offset self-calibration

Figure 6-32 shows the Analog Subsystem Block Diagram for the 100-pin PZ LQFP.

Figure 6-33 shows the Analog Subsystem Block Diagram for the 80-pin PN LQFP.

Figure 6-34 shows the Analog Subsystem Block Diagram for the 64-pin PM LQFP.

Figure 6-35 shows the Analog Subsystem Block Diagram for the 48-pin PT LQFP.

Figure 6-36 shows the analog group connections. Section 6.13.1 lists the analog pins and internal connections. Section 6.13.2 lists descriptions of analog signals.

Copyright © 2022 Texas Instruments Incorporated

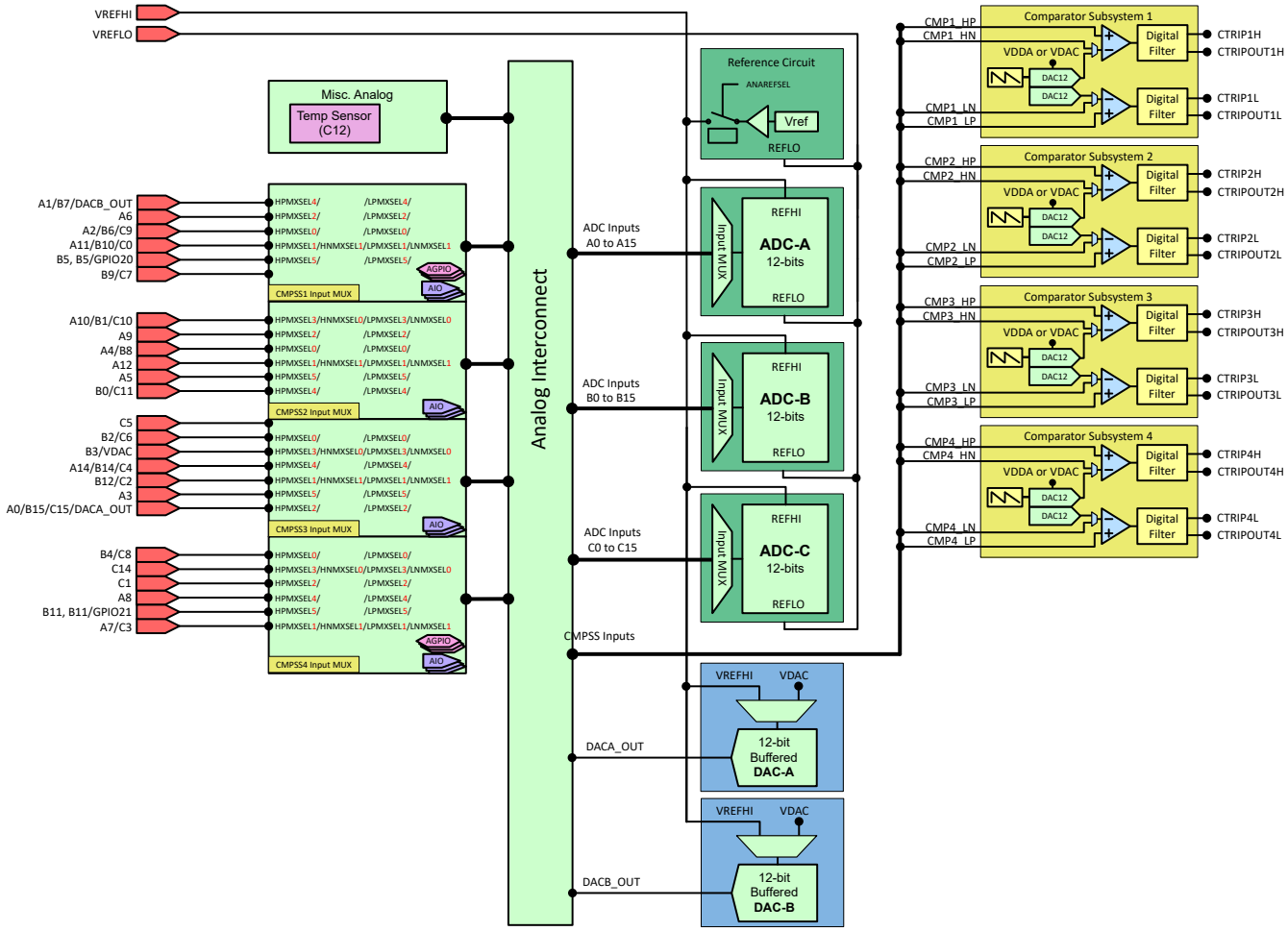

Figure 6-32. Analog Subsystem Block Diagram (100-Pin PZ LQFP)

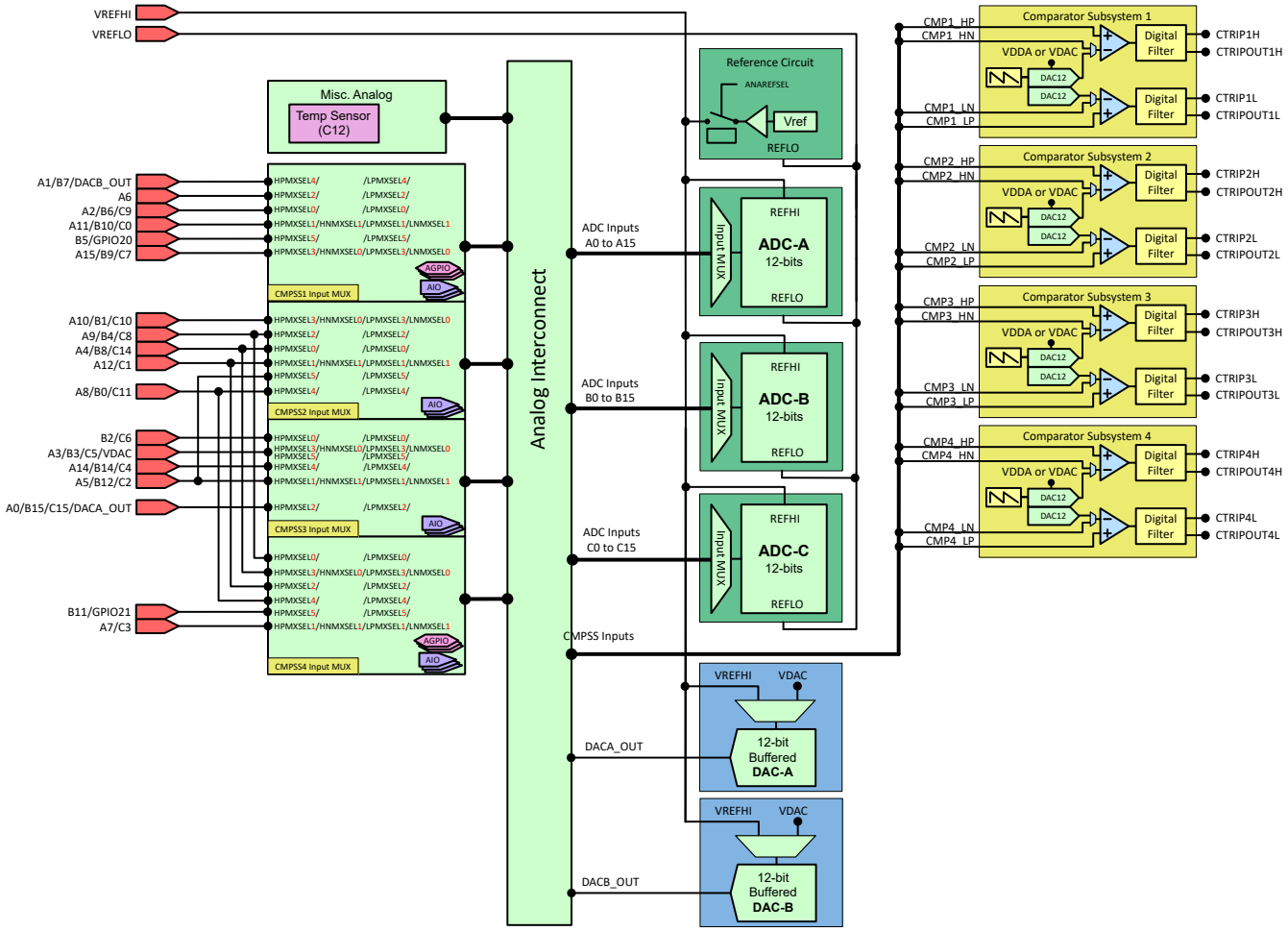

Figure 6-33. Analog Subsystem Block Diagram (80-Pin PN LQFP)

Copyright © 2022 Texas Instruments Incorporated

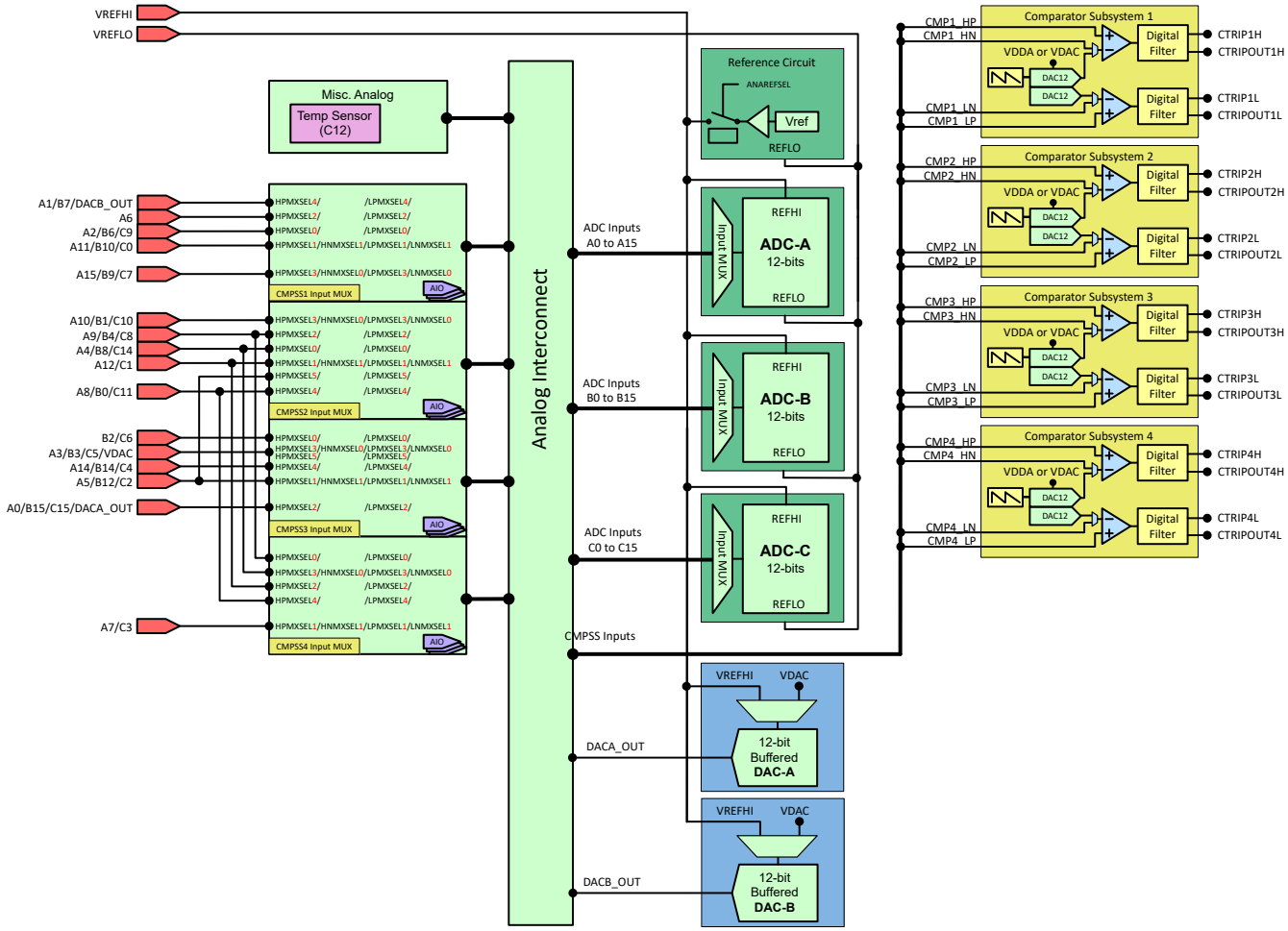

Figure 6-34. Analog Subsystem Block Diagram (64-Pin PM LQFP)

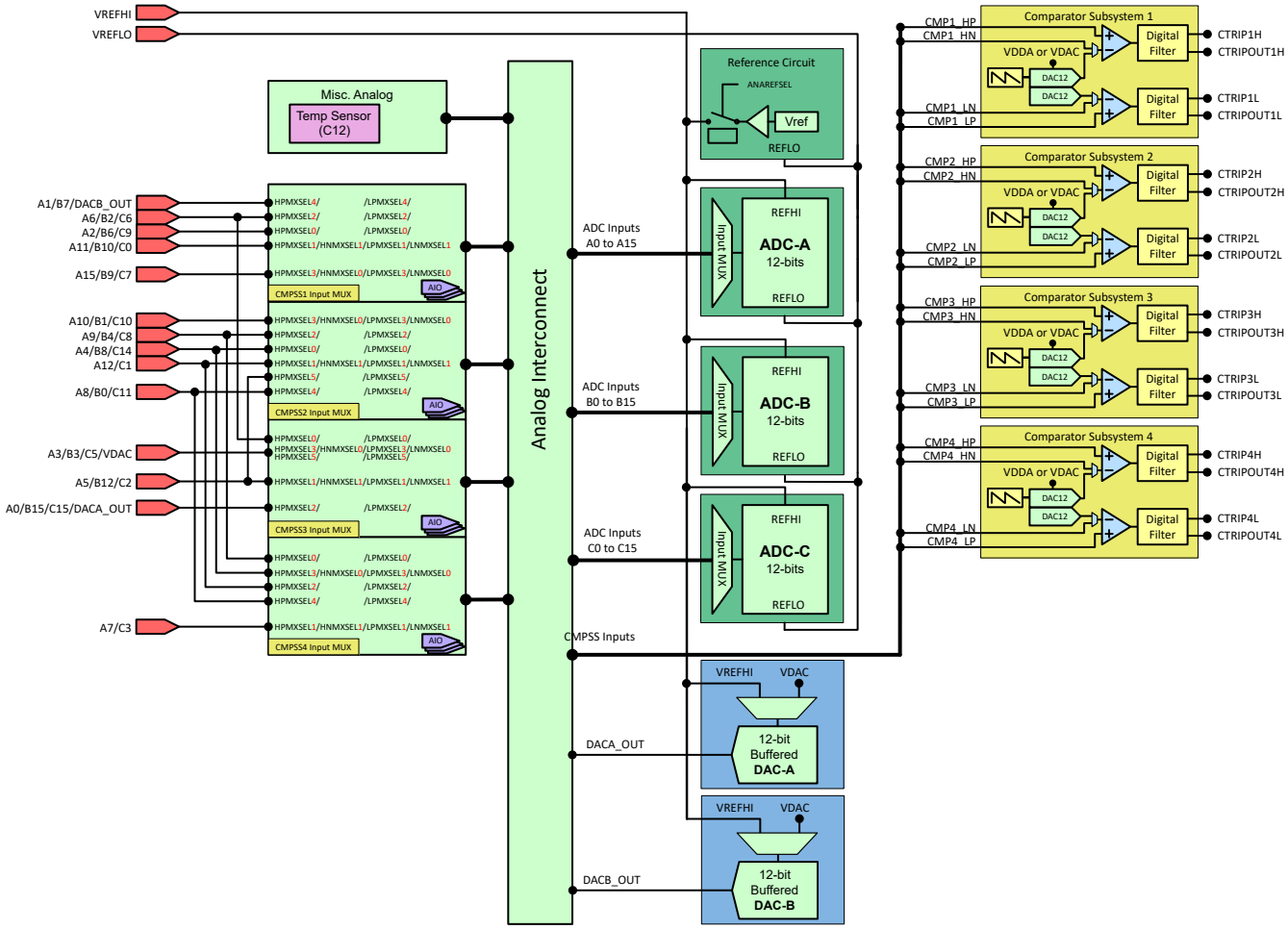

Figure 6-35. Analog Subsystem Block Diagram (48-Pin PT LQFP)

Copyright © 2022 Texas Instruments Incorporated

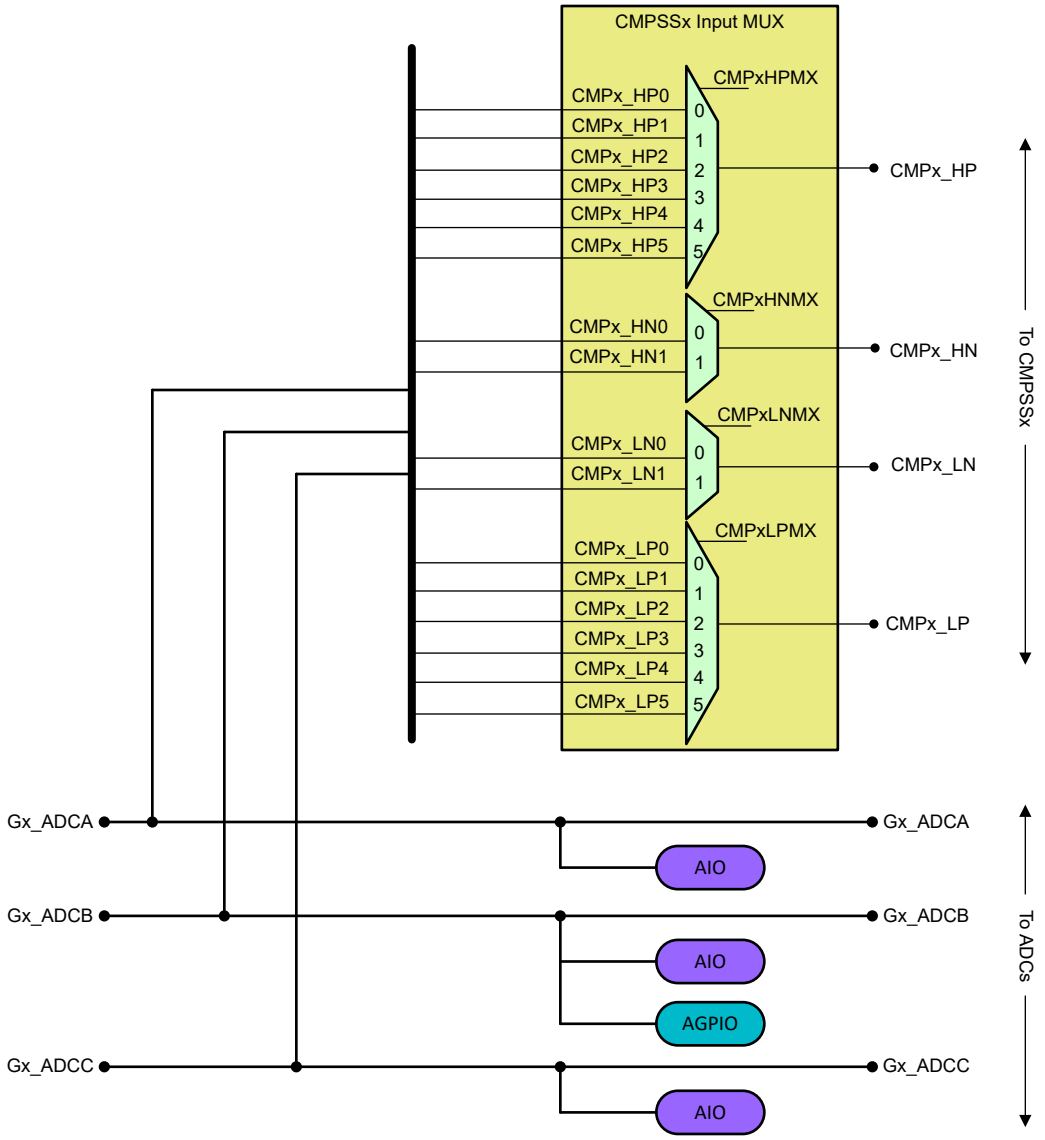

A. AIOs support digital input mode only.

Figure 6-36. Analog Group Connections

6.13.1 Analog Pins and Internal Connections

Table 6-8. Analog Pins and Internal Connections

Pin Name	Package Pin				ADC			Comparator Subsystem (MUX)				AIO Input
	100 PZ	80 PN	64 PM	48 PT	A	B	C	High Positive	High Negative	Low Positive	Low Negative	
VREFHI	24, 25	20	16	12								
VREFLO	26, 27	21	17	13	A13	B13	C13					
Analog Group 1								**CMP1**				
A6	14	10	6	4[1]	A6	-	-	CMP1 (HPMXSEL=2)		CMP1 (LPMXSEL=2)		AIO228
A2/B6/C9	17	13	9	6	A2	B6	C9	CMP1 (HPMXSEL=0)		CMP1 (LPMXSEL=0)		AIO224
A15	-	14	10	7	A15	-	-	CMP1 (HPMXSEL=3)	CMP1 (HNMXSEL=0)	CMP1 (LPMXSEL=3)	CMP1 (LNMXSEL=0)	AIO233
B9/C7	18				-	B9	C7					
A11/B10/C0	20	16	12	8	A11	B10	C0	CMP1 (HPMXSEL=1)	CMP1 (HNMXSEL=1)	CMP1 (LPMXSEL=1)	CMP1 (LNMXSEL=1)	AIO237
A1/B7/DACB_OUT	22	18	14	10	A1	B7	-	CMP1 (HPMXSEL=4)		CMP1 (LPMXSEL=4)		AIO232
Analog Group 2								**CMP2**				
A10/B1/C10	40	29	25	21	A10	B1	C10	CMP2 (HPMXSEL=3)	CMP2 (HNMXSEL=0)	CMP2 (LPMXSEL=3)	CMP2 (LNMXSEL=0)	AIO230
Analog Group 3								**CMP3**				
B2/C6	15	11	7	4[1]	-	B2	C6	CMP3 (HPMXSEL=0)		CMP3 (LPMXSEL=0)		AIO226
B3/VDAC[2]	16	12	8	5	-	B3	-	CMP3 (HPMXSEL=3)	CMP3 (HNMXSEL=0)	CMP3 (LPMXSEL=3)	CMP3 (LNMXSEL=0)	AIO242
C5	28				-	-	C5					
A3	-				A3	-	-	CMP3 (HPMXSEL=5)		CMP3 (LPMXSEL=5)		
	18	-	-	-		-	-					AIO229
A14/B14/C4	19	15	11	-	A14	B14	C4	CMP3 (HPMXSEL=4)		CMP3 (LPMXSEL=4)		AIO239
A0/B15/C15/ DACA_OUT	23	19	15	11	A0	B15	C15	CMP3 (HPMXSEL=2)		CMP3 (LPMXSEL=2)		AIO231
Analog Group 4								**CMP4**				
A7/C3	31	23	19	15	A7	-	C3	CMP4 (HPMXSEL=1)	CMP4 (HNMXSEL=1)	CMP4 (LPMXSEL=1)	CMP4 (LNMXSEL=1)	AIO245
Combined Analog Group 2/3								**CMP2/3**				
A5	35	-	-	-	A5	-	-	CMP2 (HPMXSEL=5)		CMP2 (LPMXSEL=5)		AIO249
	-	17	13	9		-	-					
B12/C2	21				-	B12	C2	CMP3 (HPMXSEL=1)	CMP3 (HNMXSEL=1)	CMP3 (LPMXSEL=1)	CMP3 (LNMXSEL=1)	AIO244
Combined Analog Group 2/4								**CMP2/4**				
A12	28	22	18	14	A12	-	-	CMP2 (HPMXSEL=1)	CMP2 (HNMXSEL=1)	CMP2 (LPMXSEL=1)	CMP2 (LNMXSEL=1)	AIO238
C1	29				-	-	C1	CMP4 (HPMXSEL=2)		CMP4 (LPMXSEL=2)		AIO248
A8	37	-	-	-	A8	-	-	CMP4 (HPMXSEL=4)		CMP4 (LPMXSEL=4)		AIO240
	-	24	20	16		-	-					AIO241
B0/C11	-				-	B0	C11	CMP2 (HPMXSEL=4)		CMP2 (LPMXSEL=4)		
	41	-	-	-	-							AIO253

Copyright © 2022 Texas Instruments Incorporated

Table 6-8. Analog Pins and Internal Connections (continued)

Pin Name	Package Pin				ADC			Comparator Subsystem (MUX)				AIO Input
	100 PZ	80 PN	64 PM	48 PT	A	B	C	High Positive	High Negative	Low Positive	Low Negative	
A4/B8	36	27	23	19	A4	B8	-	CMP2 (HPMXSEL=0)		CMP2 (LPMXSEL=0)		AIO225
C14	-				-	-	C14	CMP4 (HPMXSEL=3)	CMP4 (HNMXSEL=0)	CMP4 (LPMXSEL=3)	CMP4 (LNMXSEL=0)	
	42	-	-	-	-	-						AIO247
A9	38	28	24	20	A9	-	-	CMP2 (HPMXSEL=2)		CMP2 (LPMXSEL=2)		AIO227
B4/C8	39				-	B4	C8	CMP4 (HPMXSEL=0)		CMP4 (LPMXSEL=0)		AIO236
Other Analog												
B5	32	-	-	-	-	B5	-	CMP1 (HPMXSEL=5)		CMP1 (LPMXSEL=5)		AIO252
B5/GPIO20[3]	48	33	-	-	-		-					GPIO20
B11	30	-	-	-	-	B11	-	CMP4 (HPMXSEL=5)		CMP4 (LPMXSEL=5)		AIO251
B11/GPIO21[3]	49	34	-	-	-		-					GPIO21
TempSensor[4]	-	-	-	-	-	-	C12					

(1) A6 and C6 is double bonded as pin # 4.
(2) Optional external reference voltage for on-chip COMPDACs/GPDACs. There is an internal capacitance to VSSA on this pin whether used for ADC input or COMPDAC/GPDAC reference. If used as a VDAC reference, place at least a 1-µF capacitor on this pin.
(3) The GPIOs on these analog pins support full digital input and output functionality and are referred to as AGPIOs. By default, the AGPIOs are unconnected; that is, the analog and digital functions are both disabled. For configuration details, see the *Digital Inputs and Outputs on ADC Pins (AGPIOs)* section.
(4) Internal connection only; does not come to a device pin.

Copyright © 2022 Texas Instruments Incorporated

6.13.2 Analog Signal Descriptions

Table 6-9. Analog Signal Descriptions

Signal Name	Description
AIOx	Digital input on ADC pin
GPIOx	Digital input/output pin with ADC functionality
Ax	ADC A Input
Bx	ADC B Input
Cx	ADC C Input
CMPx_DACH	Comparator subsystem high DAC output
CMPx_DACL	Comparator subsystem low DAC output
CMPx_HNy	Comparator subsystem high comparator negative input
CMPx_HPy	Comparator subsystem high comparator positive input
CMPx_LNy	Comparator subsystem low comparator negative input
CMPx_LPy	Comparator subsystem low comparator positive input
DACx_OUT	Buffered DAC Output
TempSensor	Internal temperature sensor
VDAC	Optional external reference voltage for on-chip COMPDACs. This pin has a higher capacitance compared to the other analog pins. *See the Per-Channel Parasitic Capacitance* table for details. This capacitance is present whether the pin is being used for ADC input or COMPDAC/GPDAC reference and cannot be disabled. If this pin is being used as a reference for the on-chip COMPDAC/GPDACs, place at least a 1-µF capacitor on this pin.

Copyright © 2022 Texas Instruments Incorporated

6.13.3 Analog-to-Digital Converter (ADC)

The ADC module described here is a successive approximation (SAR) style ADC with resolution of 12 bits. This section refers to the analog circuits of the converter as the “core,” and includes the channel-select MUX, the sample-and-hold (S/H) circuit, the successive approximation circuits, voltage reference circuits, and other analog support circuits. The digital circuits of the converter are referred to as the “wrapper” and include logic for programmable conversions, result registers, interfaces to analog circuits, interfaces to the peripheral buses, post-processing circuits, and interfaces to other on-chip modules.

Each ADC module consists of a single sample-and-hold (S/H) circuit. The ADC module is designed to be duplicated multiple times on the same chip, allowing simultaneous sampling or independent operation of multiple ADCs. The ADC wrapper is start-of-conversion (SOC)-based (see the SOC Principle of Operation section of the Analog-to-Digital Converter (ADC) chapter in the *TMS320F28003x Real-Time Microcontrollers Technical Reference Manual*).

Each ADC has the following features:

- Resolution of 12 bits
- Ratiometric external reference set by VREFHI/VREFLO
- Selectable internal reference of 2.5 V or 3.3 V
- Single-ended signaling
- Input multiplexer with up to 16 channels
- 16 configurable SOCs
- 16 individually addressable result registers
- Multiple trigger sources
  - S/W: software immediate start
  - All ePWMs: ADCSOC A or B
  - GPIO XINT2
  - CPU Timers 0/1/2
  - ADCINT1/2
- Four flexible PIE interrupts
- Burst-mode triggering option
- Four post-processing blocks, each with:
  - Saturating offset calibration
  - Error from setpoint calculation
  - High, low, and zero-crossing compare, with interrupt and ePWM trip capability
  - Trigger-to-sample delay capture

Note

Not every channel may be pinned out from all ADCs. See the Pin Configuration and Functions section to determine which channels are available.

Copyright © 2022 Texas Instruments Incorporated

The block diagram for the ADC core and ADC wrapper are shown in Figure 6-37.

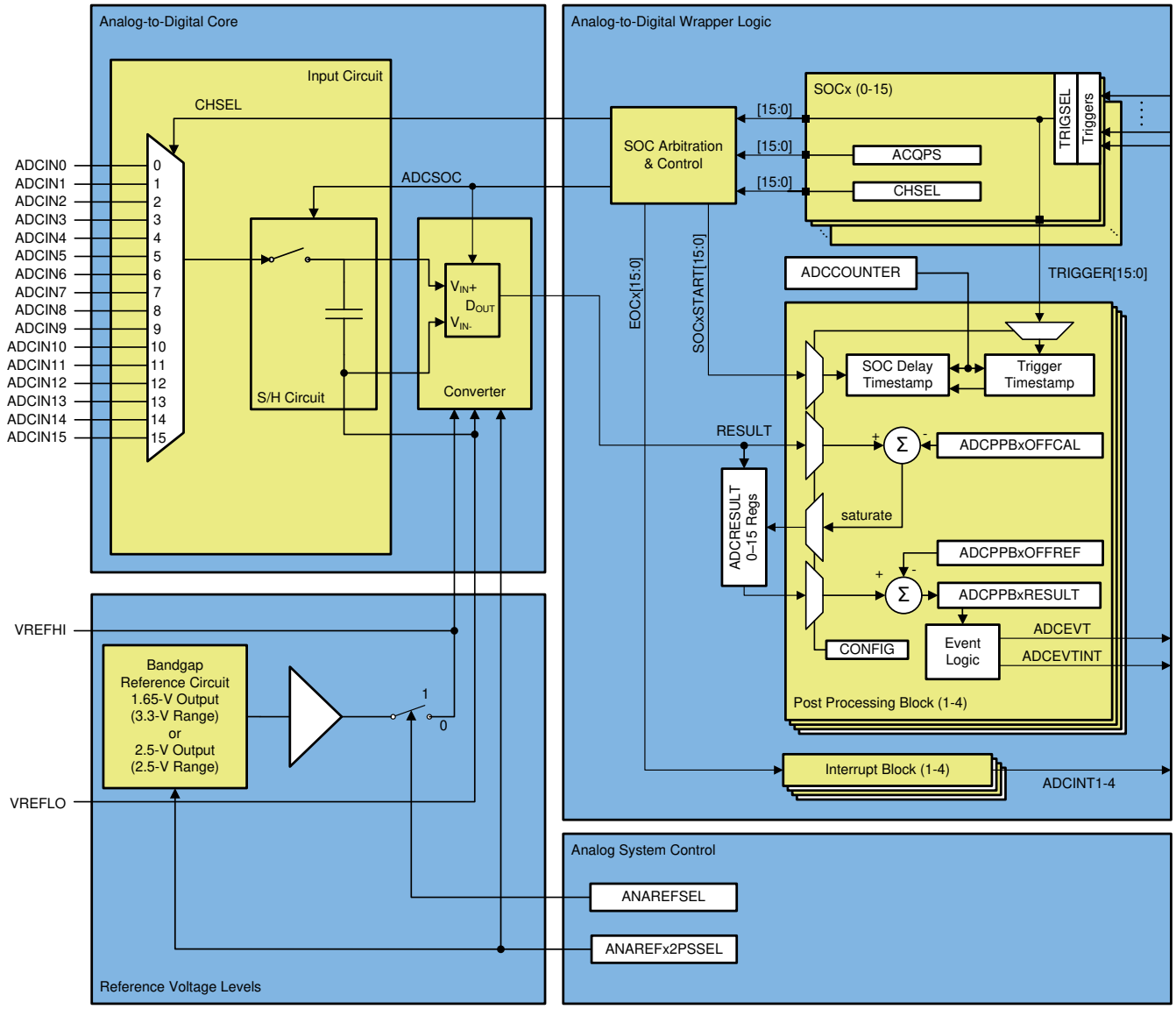

Figure 6-37. ADC Module Block Diagram

Copyright © 2022 Texas Instruments Incorporated

6.13.3.1 ADC Configurability

Some ADC configurations are individually controlled by the SOCs, while others are globally controlled per ADC module. Table 6-10 summarizes the basic ADC options and their level of configurability.

Table 6-10. ADC Options and Configuration Levels

OPTIONS	CONFIGURABILITY
Clock	Per module(1)
Resolution	Not configurable (12-bit resolution only)
Signal mode	Not configurable (single-ended signal mode only)
Reference voltage source	Either external or internal for all modules
Trigger source	Per SOC(1)
Converted channel	Per SOC
Acquisition window duration	Per SOC(1)
EOC location	Per module
Burst mode	Per module(1)

(1) Writing these values differently to different ADC modules could cause the ADCs to operate asynchronously. For guidance on when the ADCs are operating synchronously or asynchronously, see the Ensuring Synchronous Operation section of the Analog-to-Digital Converter (ADC) chapter in the *TMS320F28003x Real-Time Microcontrollers Technical Reference Manual*.

6.13.3.1.1 Signal Mode

The ADC supports single-ended signaling. The input voltage to the converter is sampled through a single pin (ADCINx), referenced to VREFLO.

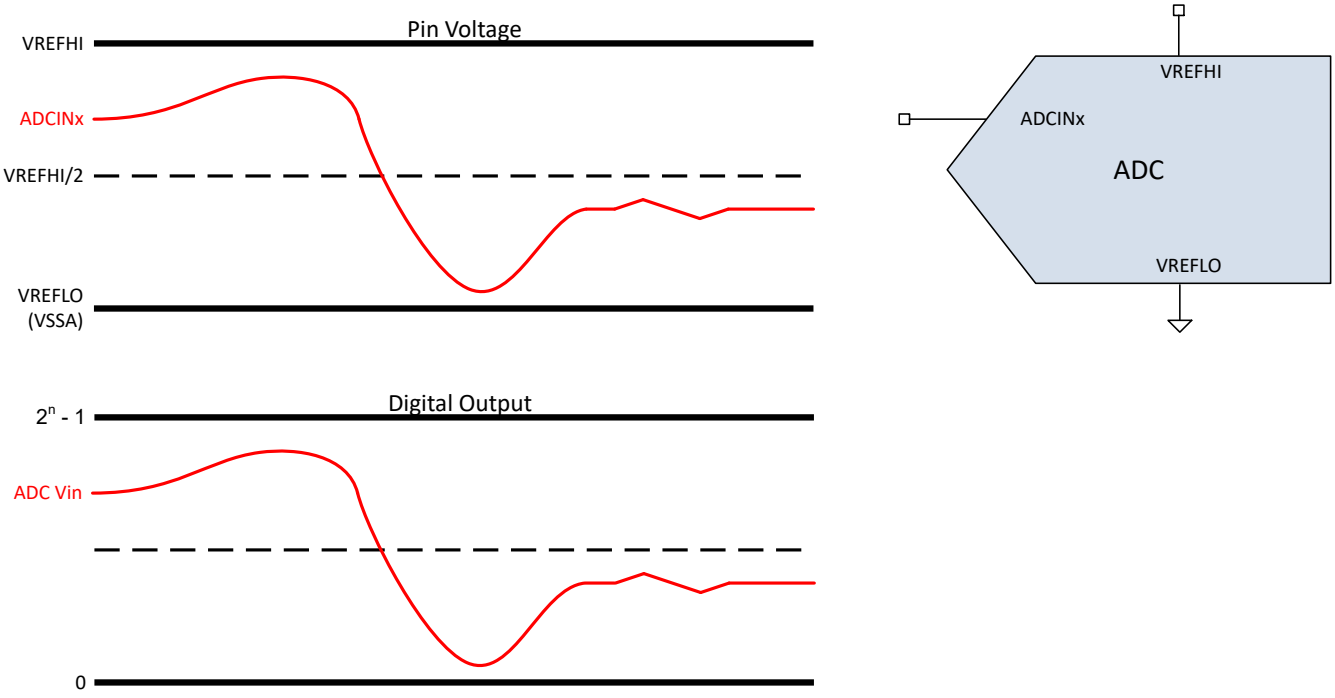

Figure 6-38. Single-ended Signaling Mode

6.13.3.2 ADC Electrical Data and Timing

Note

The ADC inputs should be kept below VDDA + 0.3 V during operation. If an ADC input exceeds this level, the V_{REF} internal to the device may be disturbed, which can impact results for other ADC inputs using the same V_{REF}.

Note

The VREFHI pin must be kept below VDDA + 0.3 V to ensure proper functional operation. If the VREFHI pin exceeds this level, a blocking circuit may activate, and the internal value of VREFHI may float to 0 V internally, giving improper ADC conversion.

6.13.3.2.1 ADC Operating Conditions

over operating free-air temperature range (unless otherwise noted)

PARAMETER	TEST CONDITIONS	MIN	TYP	MAX	UNIT
ADCCLK (derived from PERx.SYSCLK)		5		60	MHz
Sample rate	120-MHz SYSCLK			4	MSPS
	120-MHz SYSCLK (AGPIO Pin)			3.75	MSPS
Sample window duration (set by ACQPS and PERx.SYSCLK)(1)	With 50 Ω or less R_s	75			ns
	With 50 Ω or less R_s (AGPIO Pin)	90			ns
VREFHI	External Reference	2.4	2.5 or 3.0	VDDA	V
VREFHI(2)	Internal Reference = 3.3V Range		1.65		V
	Internal Reference = 2.5V Range		2.5		V
VREFLO		VSSA		VSSA	V
VREFHI - VREFLO		2.4		VDDA	V
Conversion range	Internal Reference = 3.3 V Range	0		3.3	V
	Internal Reference = 2.5 V Range	0		2.5	V
	External Reference	VREFLO		VREFHI	V

(1) The sample window must also be at least as long as 1 ADCCLK cycle for correct ADC operation.
(2) In internal reference mode, the reference voltage is driven out of the VREFHI pin by the device. The user should not drive a voltage into the pin in this mode.

Copyright © 2022 Texas Instruments Incorporated

6.13.3.2.2 ADC Characteristics

over operating free-air temperature range (unless otherwise noted)

PARAMETER	TEST CONDITIONS	MIN	TYP	MAX	UNIT
General					
ADCCLK Conversion Cycles	120-MHz SYSCLK	10.1		11	ADCCLKs
Power Up Time	External Reference mode			500	µs
	Internal Reference mode			5000	µs
	Internal Reference mode, when switching between 2.5-V range and 3.3-V range.			5000	µs
VREFHI input current(1)			130		µA
Internal Reference Capacitor Value(2)		2.2			µF
External Reference Capacitor Value(2)		2.2			µF
DC Characteristics					
Gain Error	Internal reference	–45		45	LSB
	External reference	–5	±3	5	
Offset Error		–5	±2	5	LSB
Channel-to-Channel Gain Error(4)			2		LSB
Channel-to-Channel Offset Error(4)			2		LSB
ADC-to-ADC Gain Error(5)	Identical VREFHI and VREFLO for all ADCs		4		LSB
ADC-to-ADC Offset Error(5)	Identical VREFHI and VREFLO for all ADCs		2		LSB
DNL Error		>–1	±0.5	1	LSB
INL Error		–2	±1.0	2	LSB
ADC-to-ADC Isolation	VREFHI = 2.5 V, synchronous ADCs	–1		1	LSBs
AC Characteristics					
SNR(3)	External VREFHI/Internal VREFHI = 2.5 V, fin = 100 kHz, SYSCLK from X1		70.5		dB
	Internal VREFHI = 1.65 V (0 to 3.3 V range), fin = 100 kHz, SYSCLK from X1		68.2		dB
	External/Internal VREFHI, fin = 100 kHz, SYSCLK from INTOSC		60.1		
THD(3)	External VREFHI/Internal VREFHI = 2.5 V, fin = 100 kHz, SYSCLK from X1		–85.0		dB
	Internal VREFHI = 1.65 V (0 to 3.3 V range), fin = 100 kHz, SYSCLK from X1		–82.3		dB
SFDR(3)	External/Internal VREFHI , fin = 100 kHz		79.2		dB
SINAD(3)	External VREFHI/Internal VREFHI = 2.5V, fin = 100 kHz, SYSCLK from X1		70.4		dB
	Internal VREFHI = 1.65 V (0 to 3.3 V range), fin = 100 kHz, SYSCLK from X1		68.0		dB
	External/Internal VREFHI, fin = 100 kHz, SYSCLK from INTOSC		60.0		
ENOB(3)	External VREFHI/Internal VREFHI = 2.5 V, fin = 100 kHz, SYSCLK from X1, single and synchronous ADCs		11.4		bits
	Internal VREFHI = 1.65 V (0 to 3.3 V range), fin = 100 kHz, SYSCLK from X1, single and synchronous ADCs		11.0		
	Any VREF mode, fin = 100 kHz, SYSCLK from X1, asynchronous ADCs		Not Supported		

Copyright © 2022 Texas Instruments Incorporated

6.13.3.2.2 ADC Characteristics (continued)

over operating free-air temperature range (unless otherwise noted)

PARAMETER	TEST CONDITIONS	MIN	TYP	MAX	UNIT
PSRR	VDD = 1.2-V DC + 100mV DC up to Sine at 1 kHz		60		dB
	VDD = 1.2-V DC + 100 mV DC up to Sine at 300 kHz		57		
	VDDA = 3.3-V DC + 200 mV DC up to Sine at 1 kHz		60		
	VDDA = 3.3-V DC + 200 mV Sine at 900 kHz		57		

(1) Load current on VREFHI increases when ADC input is greater than VDDA. This causes inaccurate conversions.
(2) A ceramic capacitor with package size of 0805 or smaller is preferred. Up to ±20% tolerance is acceptable.
(3) IO activity is minimized on pins adjacent to ADC input and VREFHI pins as part of best practices to reduce capacitive coupling and crosstalk.
(4) Variation across all channels belonging to the same ADC module.
(5) Worst case variation compared to other ADC modules.

6.13.3.2.3 ADC Input Model

The ADC input characteristics are given by Table 6-11 and Figure 6-39.

Table 6-11. Input Model Parameters

	DESCRIPTION	REFERENCE MODE	VALUE
C_p	Parasitic input capacitance	All	See Table 6-12 to Table 6-15
R_{on}	Sampling switch resistance	External Reference, 2.5-V Internal Reference	500 Ω
		3.3-V Internal Reference	860 Ω
C_h	Sampling capacitor	External Reference, 2.5-V Internal Reference	12.5 pF
		3.3-V Internal Reference	7.5 pF
R_s	Nominal source impedance	All	50 Ω

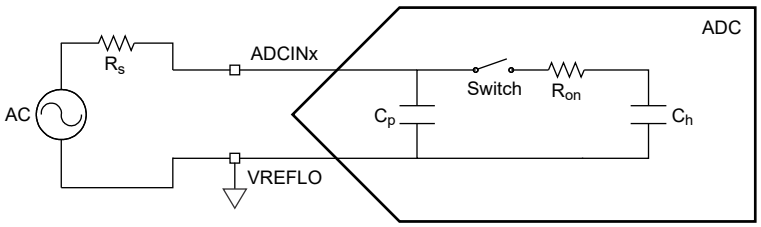

Figure 6-39. Input Model

This input model should be used with actual signal source impedance to determine the acquisition window duration. For more information, see the Choosing an Acquisition Window Duration section of the Analog-to-Digital Converter (ADC) chapter in the *TMS320F28003x Real-Time Microcontrollers Technical Reference Manual*.

Table 6-12. Per-Channel Parasitic Capacitance for 100-Pin PZ LQFP

ADC CHANNEL	C_p (pF)	
	COMPARATOR DISABLED	COMPARATOR ENABLED
A0/B15/C15/DACA_OUT	9.1	11.6
A1/B7/DACB_OUT	7.4	9.9
A2/B6/C9	4.1	6.6
A3	3.3	5.8
A4/B8	3.8	6.3

Copyright © 2022 Texas Instruments Incorporated

Table 6-12. Per-Channel Parasitic Capacitance for 100-Pin PZ LQFP (continued)

ADC CHANNEL	C_p (pF)	
	COMPARATOR DISABLED	COMPARATOR ENABLED
A5	3.5	6
A6	3.2	5.7
A7/C3	3.8	6.3
A8	4.1	6.6
A9	3.1	5.6
A10/B1/C10	4.7	7.2
A11/B11/C0	4	6.5
A12	3.4	5.9
A14/B14/C4	3.8	6.3
B0/C11	4.1	6.6
B2/C6	3.9	6.4
B3/VDAC	75	77.5
B4/C8	3.8	6.3
B5	3.5	6
B9/C7	3.3	5.8
B11	3	5.5
B12/C2	3.6	6.1
C1	3	5.5
C5	3.6	6.1
C14	4.2	6.7
AGPIO_B5	3.2	5.7
AGPIO_B11	3.1	5.6

Table 6-13. Per-Channel Parasitic Capacitance for 80-Pin PN LQFP

ADC CHANNEL	C_p (pF)	
	COMPARATOR DISABLED	COMPARATOR ENABLED
A0/B15/C15/DACA_OUT	9.1	11.6
A1/B7/DACB_OUT	7.4	9.9
A2/B6/C9	4.1	6.6
A3/B3/C5/VDAC	81.9	89.4
A4/B8/C14	8	13
A5/B12/C2	7.1	12.1
A6	3.2	5.7
A7/C3	3.8	6.3
A8/B0/C11	8.2	13.2
A9/B4/C8	6.9	11.9
A10/B1/C10	4.7	7.2
A11/B11/C0	4	6.5
A12/C1	6.4	11.4
A14/B14/C4	3.8	6.3
A15/B9/C7	7.1	12.1
B2/C6	3.9	6.4
AGPIO_B5	3.2	5.7

Copyright © 2022 Texas Instruments Incorporated

Table 6-13. Per-Channel Parasitic Capacitance for 80-Pin PN LQFP (continued)

ADC CHANNEL	C_p (pF)	
	COMPARATOR DISABLED	COMPARATOR ENABLED
AGPIO_B11	3.1	5.6

Table 6-14. Per-Channel Parasitic Capacitance for 64-Pin PM LQFP

ADC CHANNEL	C_p (pF)	
	COMPARATOR DISABLED	COMPARATOR ENABLED
A0/B15/C15/DACA_OUT	9.1	11.6
A1/B7/DACB_OUT	7.4	9.9
A2/B6/C9	4.1	6.6
A3/B3/C5/VDAC	81.9	89.4
A4/B8/C14	8	13
A5/B12/C2	7.1	12.1
A6	3.2	5.7
A7/C3	3.8	6.3
A8/B0/C11	8.2	13.2
A9/B4/C8	6.9	11.9
A10/B1/C10	4.7	7.2
A11/B11/C0	4	6.5
A12/C1	6.4	11.4
A14/B14/C4	3.8	6.3
A15/B9/C7	7.1	12.1
B2/C6	3.9	6.4

Table 6-15. Per-Channel Parasitic Capacitance for 48-Pin PT LQFP

ADC CHANNEL	C_p (pF)	
	COMPARATOR DISABLED	COMPARATOR ENABLED
A0/B15/C15/DACA_OUT	9.1	11.6
A1/B7/DACB_OUT	7.4	9.9
A2/B6/C9	4.1	6.6
A3/B3/C5/VDAC	81.9	89.4
A4/B8/C14	8	13
A5/B12/C2	7.1	12.1
A6/B2/C6	7.1	12.1
A7/C3	3.8	6.3
A8/B0/C11	8.2	13.2
A9/B4/C8	6.9	11.9
A10/B1/C10	4.7	7.2
A11/B11/C0	4	6.5
A12/C1	6.4	11.4
A15/B9/C7	7.1	12.1

Copyright © 2022 Texas Instruments Incorporated

6.13.3.2.4 ADC Timing Diagrams

Figure 6-40 shows the ADC conversion timings for two SOCs given the following assumptions:

- SOC0 and SOC1 are configured to use the same trigger.
- No other SOCs are converting or pending when the trigger occurs.
- The round-robin pointer is in a state that causes SOC0 to convert first.
- ADCINTSEL is configured to set an ADCINT flag upon end of conversion for SOC0 (whether this flag propagates through to the CPU to cause an interrupt is determined by the configurations in the PIE module).

Table 6-16 lists the descriptions of the ADC timing parameters. Table 6-17 lists the ADC timings.

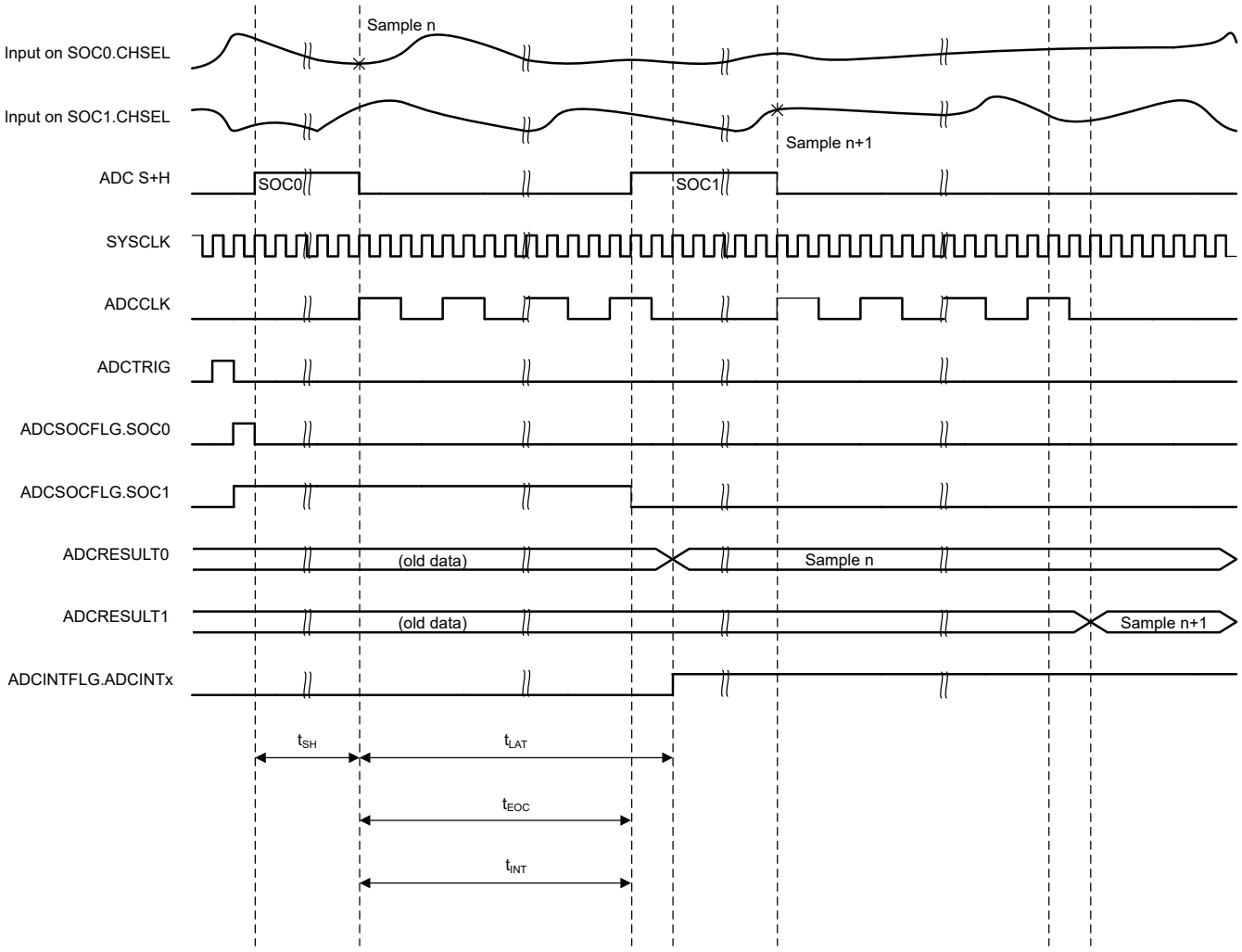

Figure 6-40. ADC Timings

Table 6-16. ADC Timing Parameters

PARAMETER	DESCRIPTION
t_{SH}	The duration of the S+H window. At the end of this window, the value on the S+H capacitor becomes the voltage to be converted into a digital value. The duration is given by (ACQPS + 1) SYSCLK cycles. ACQPS can be configured individually for each SOC, so t_{SH} will not necessarily be the same for different SOCs. **Note:** The value on the S+H capacitor will be captured approximately 5 ns before the end of the S+H window regardless of device clock settings.
t_{LAT}	The time from the end of the S+H window until the ADC results latch in the ADCRESULTx register. If the ADCRESULTx register is read before this time, the previous conversion results will be returned.
t_{EOC}	The time from the end of the S+H window until the S+H window for the next ADC conversion can begin. The subsequent sample can start before the conversion results are latched.
t_{INT}	The time from the end of the S+H window until an ADCINT flag is set (if configured). If the INTPULSEPOS bit in the ADCCTL1 register is set, t_{INT} will coincide with the conversion results being latched into the result register. If the INTPULSEPOS bit is 0, t_{INT} will coincide with the end of the S+H window. If t_{INT} triggers a read of the ADC result register (directly through DMA or indirectly by triggering an ISR that reads the result), care must be taken to ensure the read occurs after the results latch (otherwise, the previous results will be read). If the INTPULSEPOS bit is 0, and the OFFSET field in the ADCINTCYCLE register is not 0, then there will be a delay of OFFSET SYSCLK cycles before the ADCINT flag is set. This delay can be used to enter the ISR or trigger the DMA at exactly the time the sample is ready.

Table 6-17. ADC Timings

ADCCLK PRESCALE		SYSCLK CYCLES				ADCCLK CYCLES
ADCCTL2 [PRESCALE]	RATIO ADCCLK:SYSCLK	t_{EOC}	t_{LAT} (1)	$t_{INT(EARLY)}$ (2)	$t_{INT(LATE)}$	t_{EOC}
0	1	11	13	1	11	11
2	2	21	23	1	21	10.5
4	3	31	34	1	31	10.3
6	4	41	44	1	41	10.3
8	5	51	55	1	51	10.2
10	6	61	65	1	61	10.2
12	7	71	76	1	71	10.1
14	8	81	86	1	81	10.1

(1) Refer to the "ADC: DMA Read of Stale Result" advisory in the *TMS320F28003x Real-Time MCUs Silicon Errata*.
(2) By default, t_{INT} occurs one SYSCLK cycle after the S+H window if INTPULSEPOS is 0. This can be changed by writing to the OFFSET field in the ADCINTCYCLE register.

Copyright © 2022 Texas Instruments Incorporated

6.13.4 Temperature Sensor

6.13.4.1 Temperature Sensor Electrical Data and Timing

The temperature sensor can be used to measure the device junction temperature. The temperature sensor is sampled through an internal connection to the ADC and translated into a temperature through TI-provided software. When sampling the temperature sensor, the ADC must meet the acquisition time in the Temperature Sensor Characteristics table.

6.13.4.1.1 Temperature Sensor Characteristics

over recommended operating conditions (unless otherwise noted)

PARAMETER		TEST CONDITIONS	MIN	TYP	MAX	UNIT
T_{acc}	Temperature Accuracy	External reference		±15		°C
$t_{startup}$	Start-up time (TSNSCTL[ENABLE] to sampling temperature sensor)			500		µs
t_{acq}	ADC acquisition time		450			ns

Copyright © 2022 Texas Instruments Incorporated

6.13.5 Comparator Subsystem (CMPSS)

The Comparator Subsystem (CMPSS) consists of analog comparators and supporting circuits that are useful for power applications such as peak current mode control, switched-mode power, power factor correction, voltage trip monitoring, and so forth.

The comparator subsystem is built around a number of modules. Each subsystem contains two comparators, two reference 12-bit DACs, and two digital filters. The subsystem also includes one ramp generator. Comparators are denoted "H" or "L" within each module where “H” and “L” represent high and low, respectively. Each comparator generates a digital output which indicates whether the voltage on the positive input is greater than the voltage on the negative input. The positive input of the comparator is driven from an external pin (see the *Analog Subsystem* chapter of the *TMS320F28003x Real-Time Microcontrollers Technical Reference Manual* for mux options available to the CMPSS. The negative input can be driven by an external pin or by the programmable reference 12-bit DAC. Each comparator output passes through a programmable digital filter that can remove spurious trip signals. An unfiltered output is also available if filtering is not required. A ramp generator circuit is optionally available to control the reference 12-bit DAC value for the high comparator in the subsystem.

Each CMPSS includes:

- Two analog comparators
- Two programmable reference 12-bit DACs
- One ramp generator
- Ability to synchronize submodules with EPWMSYNCPER
- Ability to extend clear signal with EPWMBLANK
- Ability to synchronize output with SYSCLK
- Ability to latch output
- Ability to invert output
- Option to use hysteresis on the input
- Option for negative input of comparator to be driven by an external signal or by the reference DAC
- Option to choose between VDDA or VDAC to be the DAC reference voltage

Copyright © 2022 Texas Instruments Incorporated

6.13.5.1 CMPSS Connectivity Diagram

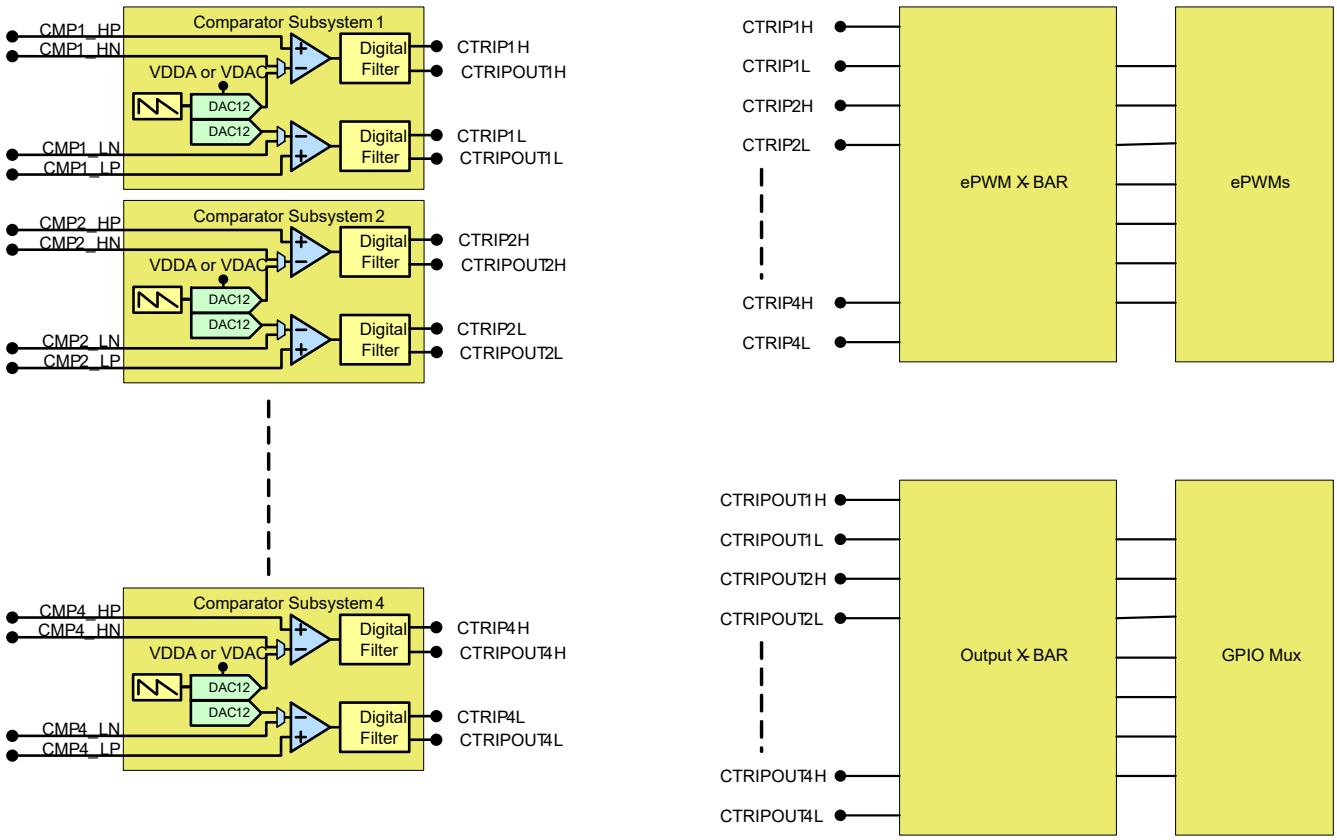

Figure 6-41. CMPSS Connectivity

6.13.5.2 Block Diagram

The block diagram for the CMPSS is shown in Figure 6-42.

- CTRIPx(x= "H" or "L") signals are connected to the ePWM X-BAR for ePWM trip response. See the *Enhanced Pulse Width Modulator (ePWM)* chapter of the *TMS320F28003x Real-Time Microcontrollers Technical Reference Manual* for more details on the ePWM X-BAR mux configuration.
- CTRIPxOUTx(x= "H" or "L") signals are connected to the Output X-BAR for external signaling. See the *General-Purpose Input/Output (GPIO)* chapter of the *TMS320F28003x Real-Time Microcontrollers Technical Reference Manual* for more details on the Output X-BAR mux configuration.

Copyright © 2022 Texas Instruments Incorporated

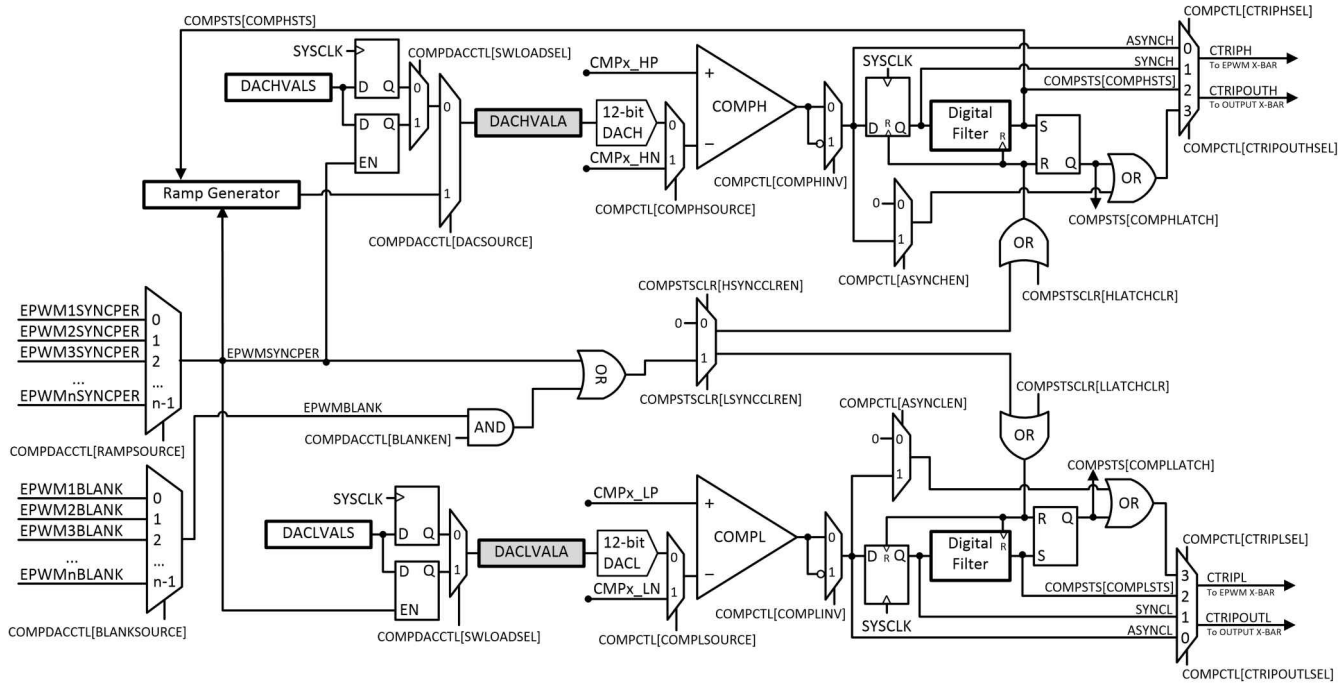

Figure 6-42. CMPSS Module Block Diagram

Copyright © 2022 Texas Instruments Incorporated

6.13.5.3 CMPSS Electrical Data and Timing

6.13.5.3.1 Comparator Electrical Characteristics

over recommended operating conditions (unless otherwise noted)

PARAMETER		TEST CONDITIONS	MIN	TYP	MAX	UNIT
TPU	Power-up time				500	µs
Comparator input (CMPINxx) range			0		VDDA	V
Input referred offset error		Low common mode, inverting input set to 50mV	–20		20	mV
Hysteresis(1)		1x	4	12	20	LSB
		2x	17	24	33	
		3x	25	36	50	
		4x	30	48	67	
Response time (delay from CMPINx input pin change to GPIO output pin through either ePWM X-BAR or Output X-BAR)		Step response		21	60	ns
		Ramp response (1.65V/µs)		26		
		Ramp response (8.25mV/µs)		30		ns
PSRR	Power Supply Rejection Ratio	Up to 250 kHz		46		dB
CMRR	Common Mode Rejection Ratio		40			dB

(1) The CMPSS DAC is used as the reference to determine how much hysteresis to apply. Therefore, hysteresis will scale with the CMPSS DAC reference voltage. Hysteresis is available for all comparator input source configurations.

CMPSS Comparator Input Referred Offset and Hysteresis

Note

The CMPSS inputs must be kept below VDDA + 0.3 V to ensure proper functional operation. If a CMPSS input exceeds this level, an internal blocking circuit isolates the internal comparator from the external pin until the external pin voltage returns below VDDA + 0.3 V. During this time, the internal comparator input is floating and can decay below VDDA within approximately 0.5 µs. After this time, the comparator could begin to output an incorrect result depending on the value of the other comparator input.

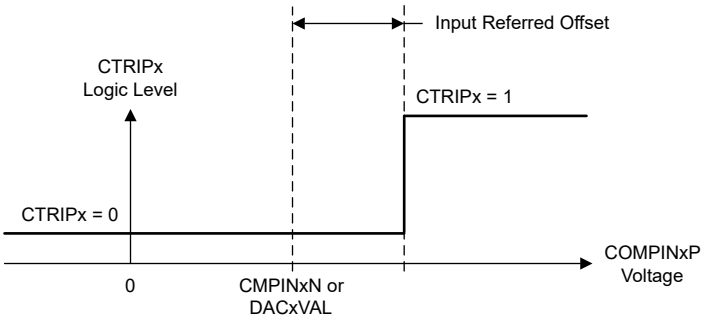

Figure 6-43. CMPSS Comparator Input Referred Offset

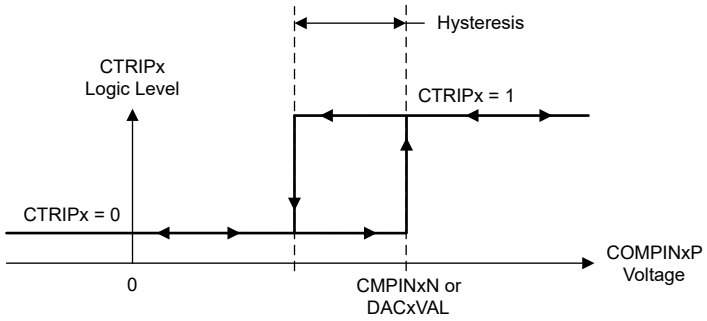

Figure 6-44. CMPSS Comparator Hysteresis

6.13.5.3.2 CMPSS DAC Static Electrical Characteristics

over recommended operating conditions (unless otherwise noted)

PARAMETER	TEST CONDITIONS	MIN	TYP	MAX	UNIT
CMPSS DAC output range	Internal reference	0		VDDA	V
	External reference	0		VDAC(4)	
Static offset error(1)		–25		25	mV
Static gain error(1)		–2		2	% of FSR
Static DNL	Endpoint corrected	>–1		4	LSB
Static INL	Endpoint corrected	–16		16	LSB
Settling time	Settling to 1LSB after full-scale output change			1	µs
Resolution			12		bits
CMPSS DAC output disturbance(2)	Error induced by comparator trip or CMPSS DAC code change within the same CMPSS module	–100		100	LSB
CMPSS DAC disturbance time(2)				200	ns
VDAC reference voltage	When VDAC is reference	2.4	2.5 or 3.0	VDDA	V
VDAC load(3)	When VDAC is reference	6	8	10	kΩ

(1) Includes comparator input referred errors.
(2) Disturbance error may be present on the CMPSS DAC output for a certain amount of time after a comparator trip.
(3) Per active CMPSS module.
(4) The maximum output voltage is VDDA when VDAC > VDDA.

Copyright © 2022 Texas Instruments Incorporated

6.13.5.3.3 CMPSS Illustrative Graphs

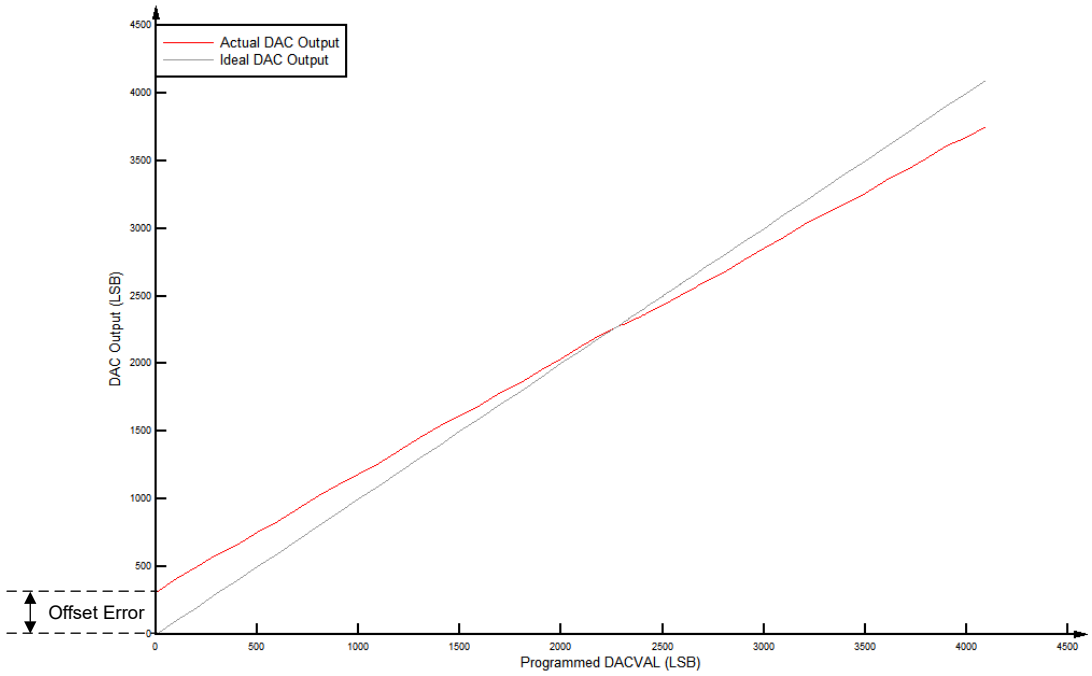

Figure 6-45. CMPSS DAC Static Offset

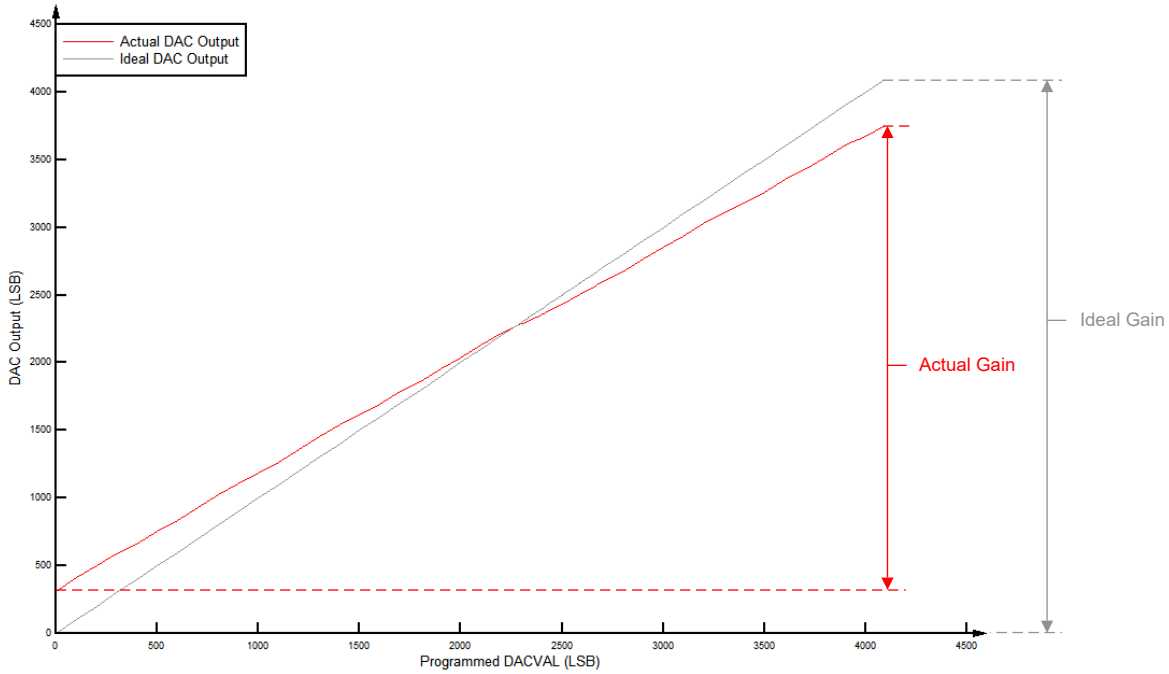

Figure 6-46. CMPSS DAC Static Gain

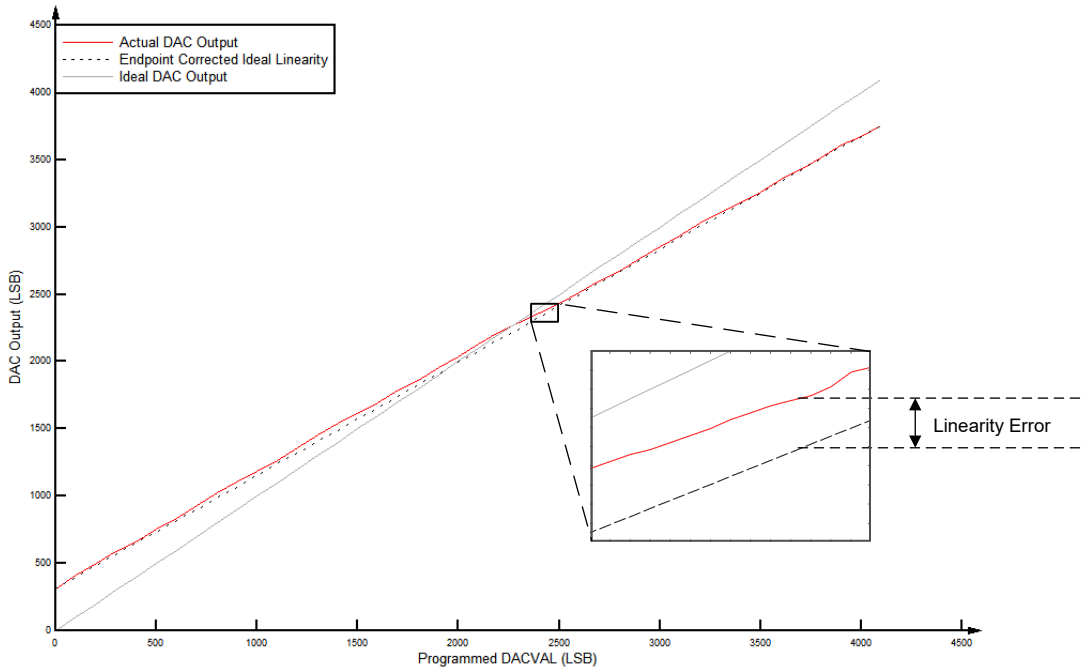

Figure 6-47. CMPSS DAC Static Linearity

Copyright © 2022 Texas Instruments Incorporated

6.13.6 Buffered Digital-to-Analog Converter (DAC)

The buffered DAC module consists of an internal 12-bit DAC and an analog output buffer that can drive an external load. For driving even higher loads than typical, a trade-off can be made between load size and output voltage swing. For the load conditions of the buffered DAC, see the Buffered DAC Electrical Data and Timing section. The buffered DAC is a general-purpose DAC that can be used to generate a DC voltage or AC waveforms such as sine waves, square waves, triangle waves and so forth. Software writes to the DAC value register can take effect immediately or can be synchronized with EPWMSYNCO events.

Each buffered DAC has the following features:

- 12-bit resolution
- Selectable reference voltage source
- x1 and x2 gain modes when using internal VREFHI
- Ability to synchronize with EPWMSYNCPER

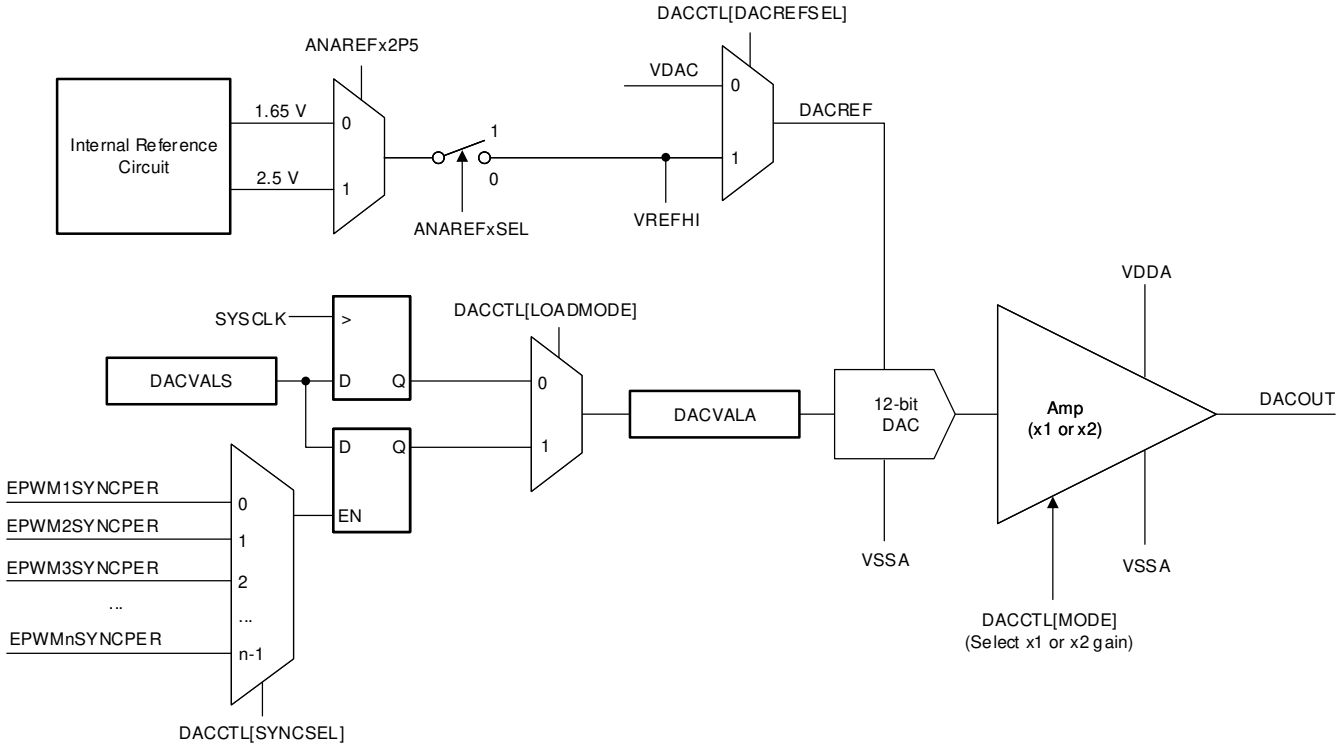

Figure 6-48. DAC Module Block Diagram

6.13.6.1 Buffered DAC Electrical Data and Timing

6.13.6.1.1 Buffered DAC Operating Conditions

over recommended operating conditions (unless otherwise noted)(1)

PARAMETER		TEST CONDITIONS	MIN	TYP	MAX	UNIT
R_L	Resistive Load(2)		5			kΩ
C_L	Capacitive Load				100	pF
V_{OUT}	Valid Output Voltage Range(3)	R_L = 5 kΩ	0.3		VDDA – 0.3	V
		R_L = 1 kΩ	0.6		VDDA – 0.6	V
Reference Voltage(4)		VDAC or VREFHI	2.4	2.5 or 3.0	VDDA	V

(1) Typical values are measured with VREFHI = 3.3 V and VREFLO = 0 V, unless otherwise noted. Minimum and maximum values are tested or characterized with VREFHI = 2.5 V and VREFLO = 0 V.
(2) DAC can drive a minimum resistive load of 1 kΩ, but the output range will be limited.
(3) This is the linear output range of the DAC. The DAC can generate voltages outside this range, but the output voltage will not be linear due to the buffer.
(4) For best PSRR performance, VDAC or VREFHI should be less than VDDA.

6.13.6.1.2 Buffered DAC Electrical Characteristics

over recommended operating conditions (unless otherwise noted)(1)

PARAMETER		TEST CONDITIONS	MIN	TYP	MAX	UNIT
General						
Resolution				12		bits
Load Regulation			–1		1	mV/V
Glitch Energy				1.5		V-ns
Voltage Output Settling Time Full-Scale		Settling to 2 LSBs after 0.3V-to-3V transition			2	µs
Voltage Output Settling Time 1/4th Full-Scale		Settling to 2 LSBs after 0.3V-to-0.75V transition			1.6	µs
Voltage Output Slew Rate		Slew rate from 0.3V-to-3V transition	2.8		4.5	V/µs
Load Transient Settling Time		5-kΩ Load			328	ns
		1-kΩ Load			557	ns
Reference Input Resistance(2)		VDAC or VREFHI	160	200	240	kΩ
TPU	Power Up Time	External Reference mode			500	µs
		Internal Reference mode			5000	µs
DC Characteristics						
Offset	Offset Error	Midpoint	–10		10	mV
Gain	Gain Error(3)		–2.5		2.5	% of FSR
DNL	Differential Non Linearity(4)	Endpoint corrected	–1	±0.4	1	LSB
INL	Integral Non Linearity	Endpoint corrected	–5	±2	5	LSB
AC Characteristics						
Output Noise		Integrated noise from 100 Hz to 100 kHz		600		µVrms
		Noise density at 10 kHz		800		nVrms/√Hz
SNR	Signal to Noise Ratio	1 kHz, 200 KSPS		64		dB
THD	Total Harmonic Distortion	1 kHz, 200 KSPS		–64.2		dB
SFDR	Spurious Free Dynamic Range	1 kHz, 200 KSPS		66		dB
SINAD	Signal to Noise and Distortion Ratio	1 kHz, 200 KSPS		61.7		dB

Copyright © 2022 Texas Instruments Incorporated

6.13.6.1.2 Buffered DAC Electrical Characteristics (continued)

over recommended operating conditions (unless otherwise noted)(1)

PARAMETER		TEST CONDITIONS	MIN	TYP	MAX	UNIT
PSRR	Power Supply Rejection Ratio(5)	DC		70		dB
		100 kHz		30		dB

(1) Typical values are measured with VREFHI = 3.3 V and VREFLO = 0 V, unless otherwise noted. Minimum and maximum values are tested or characterized with VREFHI = 2.5 V and VREFLO = 0 V.
(2) Per active Buffered DAC module.
(3) Gain error is calculated for linear output range.
(4) The DAC output is monotonic.
(5) VREFHI = 3.2 V, VDDA = 3.3 V DC + 100 mV Sine.

Copyright © 2022 Texas Instruments Incorporated

6.14 Control Peripherals

6.14.1 Enhanced Pulse Width Modulator (ePWM)

The ePWM peripheral is a key element in controlling many of the power electronic systems found in both commercial and industrial equipment. The ePWM type-4 module is able to generate complex pulse width waveforms with minimal CPU overhead by building the peripheral up from smaller modules with separate resources that can operate together to form a system. Some of the highlights of the ePWM type-4 module include complex waveform generation, dead-band generation, a flexible synchronization scheme, advanced trip-zone functionality, and global register reload capabilities.

The ePWM and eCAP synchronization scheme on the device provides flexibility in partitioning the ePWM and eCAP modules and allows localized synchronization within the modules.

Figure 6-49 shows the ePWM module. Figure 6-50 shows the ePWM trip input connectivity.

Copyright © 2022 Texas Instruments Incorporated

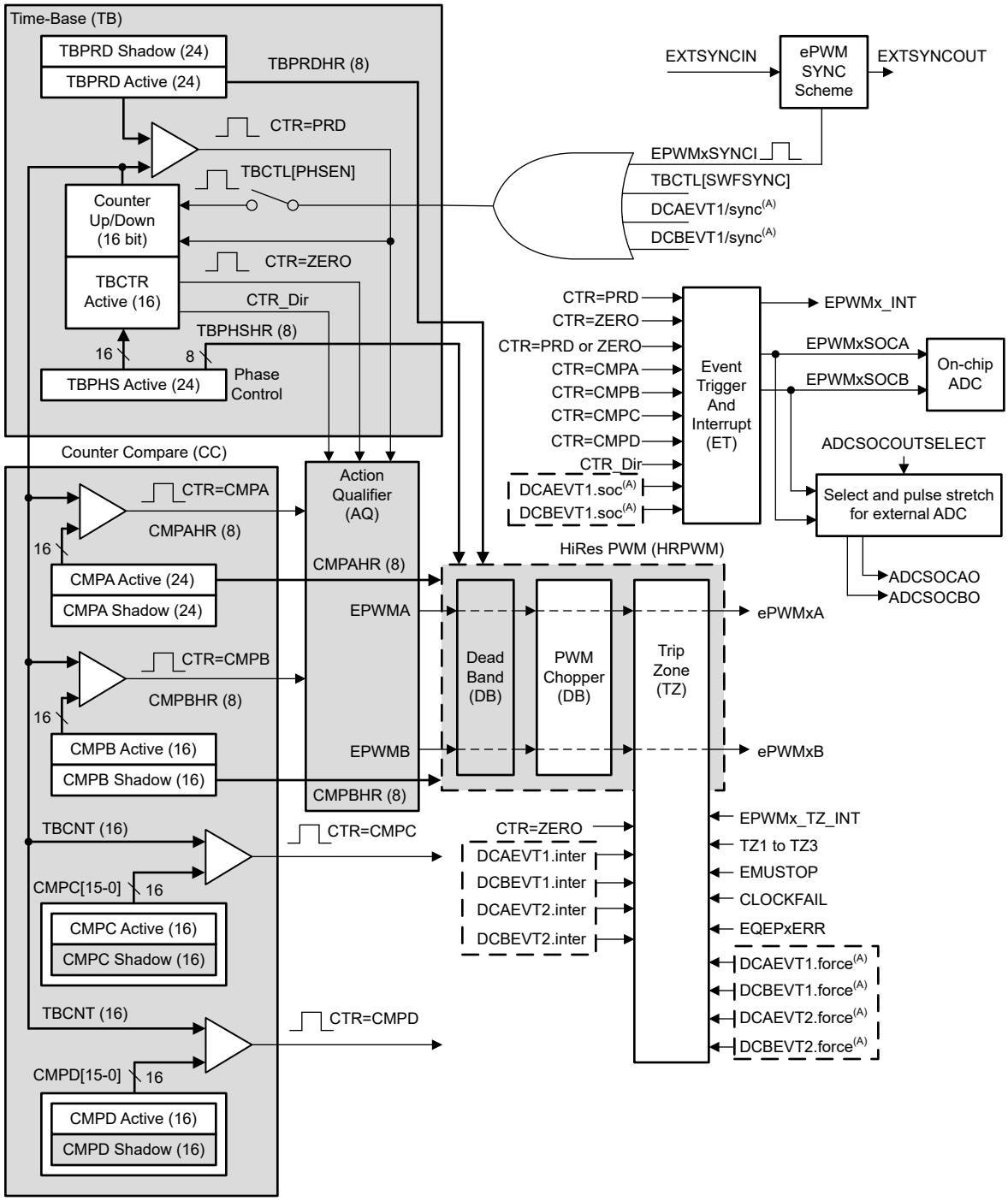

A. These events are generated by the ePWM digital compare (DC) submodule based on the levels of the TRIPIN inputs.

Figure 6-49. ePWM Submodules and Critical Internal Signal Interconnects

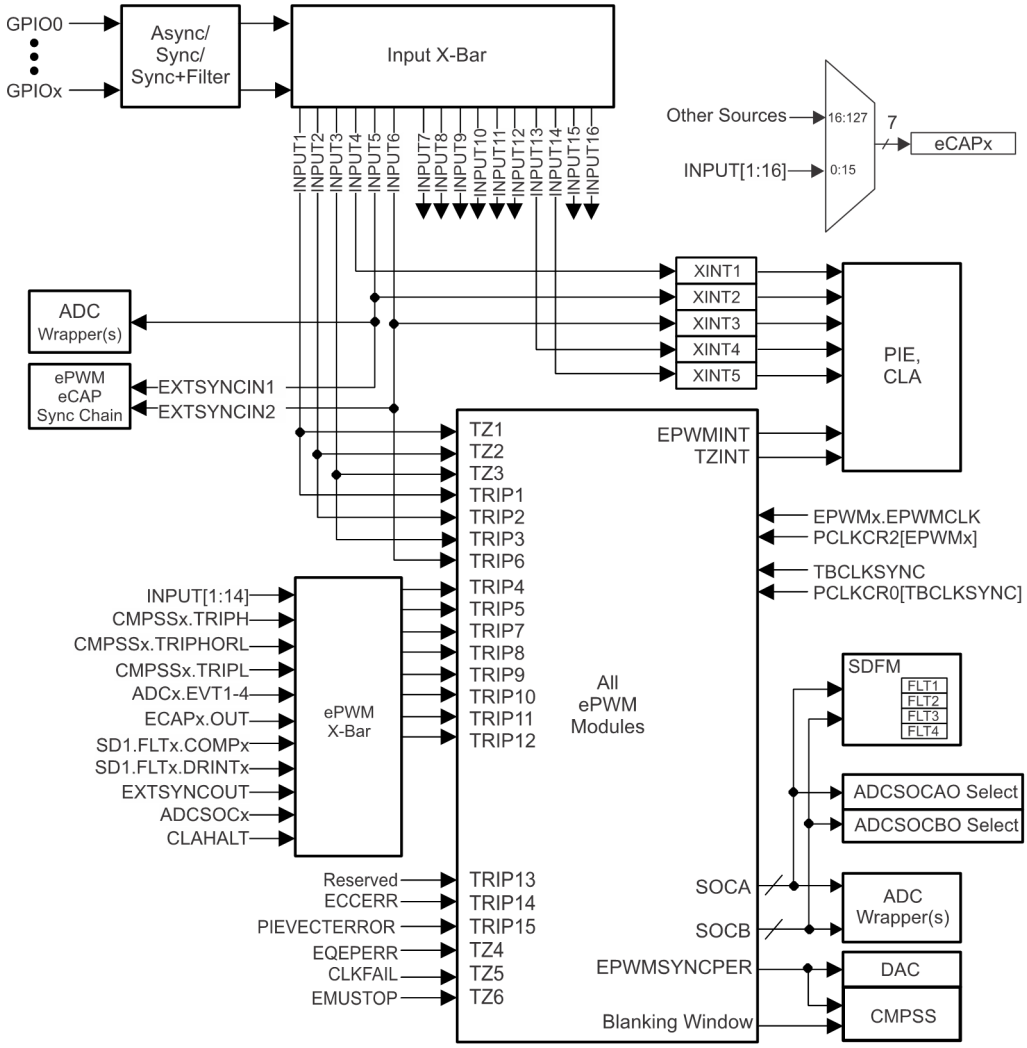

Figure 6-50. ePWM Trip Input Connectivity

Copyright © 2022 Texas Instruments Incorporated

6.14.1.1 ePWM Electrical Data and Timing

For an explanation of the input qualifier parameters, see the General-Purpose Input Timing Requirements table.

6.14.1.1.1 ePWM Timing Requirements

			MIN	MAX	UNIT
$t_{w(SYNCIN)}$	Sync input pulse width	Asynchronous	$2t_{c(EPWMCLK)}$		cycles
		Synchronous	$2t_{c(EPWMCLK)}$		
		With input qualifier	$1t_{c(EPWMCLK)} + t_{w(IQSW)}$		

6.14.1.1.2 ePWM Switching Characteristics

over recommended operating conditions (unless otherwise noted)

PARAMETER[1]		MIN	MAX	UNIT
$t_{w(PWM)}$	Pulse duration, PWMx output high/low	20		ns
$t_{w(SYNCOUT)}$	Sync output pulse width	$8t_{c(SYSCLK)}$		cycles
$t_{d(TZ-PWM)}$	Delay time, trip input active to PWM forced high Delay time, trip input active to PWM forced low Delay time, trip input active to PWM Hi-Z		25	ns

(1) 20-pF load on pin.

6.14.1.1.3 Trip-Zone Input Timing

For an explanation of the input qualifier parameters, see the General-Purpose Input Timing Requirements table.

6.14.1.1.3.1 Trip-Zone Input Timing Requirements

			MIN	MAX	UNIT
$t_{w(TZ)}$	Pulse duration, $\overline{TZ}x$ input low	Asynchronous	$1t_{c(EPWMCLK)}$		cycles
		Synchronous	$2t_{c(EPWMCLK)}$		cycles
		With input qualifier	$1t_{c(EPWMCLK)} + t_{w(IQSW)}$		cycles

6.14.1.1.3.2 PWM Hi-Z Characteristics Timing Diagram

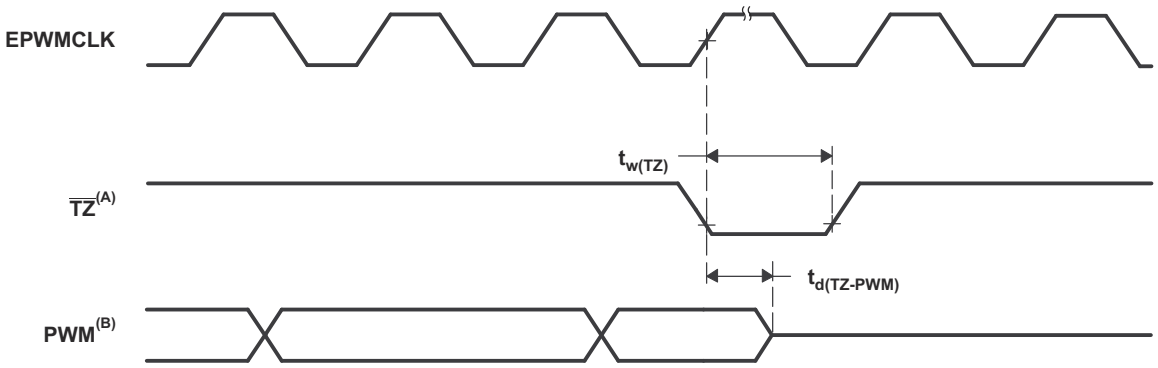

A. $\overline{TZ}$: $\overline{TZ1}$, $\overline{TZ2}$, $\overline{TZ3}$, TRIP1–TRIP12

B. PWM refers to all the PWM pins in the device. The state of the PWM pins after $\overline{TZ}$ is taken high depends on the PWM recovery software.

Figure 6-51. PWM Hi-Z Characteristics

Copyright © 2022 Texas Instruments Incorporated

6.14.2 High-Resolution Pulse Width Modulator (HRPWM)

The HRPWM combines multiple delay lines in a single module and a simplified calibration system by using a dedicated calibration delay line. For each ePWM module, there are two HR outputs:

- HR Duty and Deadband control on Channel A
- HR Duty and Deadband control on Channel B

The HRPWM module offers PWM resolution (time granularity) that is significantly better than what can be achieved using conventionally derived digital PWM methods. The key points for the HRPWM module are:

- Significantly extends the time resolution capabilities of conventionally derived digital PWM
- This capability can be used in both single edge (duty cycle and phase-shift control) as well as dual edge control for frequency/period modulation.
- Finer time granularity control or edge positioning is controlled through extensions to the Compare A, B, phase, period and deadband registers of the ePWM module.

6.14.2.1 HRPWM Electrical Data and Timing

6.14.2.1.1 High-Resolution PWM Characteristics

PARAMETER	MIN	TYP	MAX	UNIT
Micro Edge Positioning (MEP) step size(1)		150	310	ps

(1) The MEP step size will be largest at high temperature and minimum voltage on V_{DD}. MEP step size will increase with higher temperature and lower voltage and decrease with lower temperature and higher voltage.
Applications that use the HRPWM feature should use MEP Scale Factor Optimizer (SFO) estimation software functions. See the TI software libraries for details of using SFO functions in end applications. SFO functions help to estimate the number of MEP steps per SYSCLK period dynamically while the HRPWM is in operation.

6.14.3 External ADC Start-of-Conversion Electrical Data and Timing

6.14.3.1 External ADC Start-of-Conversion Switching Characteristics

over recommended operating conditions (unless otherwise noted)

PARAMETER		MIN	MAX	UNIT
$t_{w(ADCSOCL)}$	Pulse duration, $\overline{ADCSOCxO}$ low	$32t_{c(SYSCLK)}$		cycles

6.14.3.2 $\overline{ADCSOCAO}$ or $\overline{ADCSOCBO}$ Timing Diagram

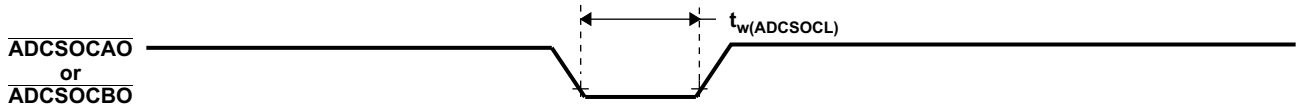

Figure 6-52. $\overline{ADCSOCAO}$ or $\overline{ADCSOCBO}$ Timing

Copyright © 2022 Texas Instruments Incorporated

6.14.4 Enhanced Capture (eCAP)

The eCAP module can be used in systems where accurate timing of external events is important. eCAP/HRCAP on this device is Type-2.

Applications for eCAP include:

- Speed measurements of rotating machinery (for example, toothed sprockets sensed through Hall sensors)
- Elapsed time measurements between position sensor pulses
- Period and duty cycle measurements of pulse train signals
- Decoding current or voltage amplitude derived from duty cycle encoded current/voltage sensors

The eCAP module includes the following features:

- 4-event time-stamp registers (each 32 bits)
- Edge-polarity selection for up to four sequenced time-stamp capture events
- Interrupt on either of the four events
- Single shot capture of up to four event timestamps
- Continuous mode capture of timestamps in a four-deep circular buffer
- Absolute time-stamp capture
- Difference (Delta) mode time-stamp capture
- All of the above resources dedicated to a single input pin
- When not used in capture mode, the eCAP module can be configured as a single-channel PWM output (APWM).

The capture functionality of the Type-1 eCAP is enhanced from the Type-0 eCAP with the following added features:

- Event filter reset bit
  - Writing a 1 to ECCTL2[CTRFILTRESET] will clear the event filter, the modulo counter, and any pending interrupts flags. Resetting the bit is useful for initialization and debug.
- Modulo counter status bits
  - The modulo counter (ECCTL2 [MODCTRSTS]) indicates which capture register will be loaded next. In the Type-0 eCAP, it was not possible to know current state of modulo counter.
- DMA trigger source
  - eCAPxDMA is added as a DMA trigger. CEVT[1–4] can be configured as the source for eCAPxDMA.
- Input multiplexer
  - ECCTL0 [INPUTSEL] selects one of 128 input signals.
- EALLOW protection
  - EALLOW protection is added to critical registers. To maintain software compatibility with the Type-0 eCAP, configure DEV_CFG_REGS.ECAPTYPE to make these registers unprotected.

The capture functionality of the Type-2 eCAP is enhanced from the Type-1 eCAP with the following added features:

- ECAPxSYNCINSEL register
  - The ECAPSxYNCINSEL register is added for each eCAP to select an external SYNCIN. Every eCAP can have a separate SYNCIN signal.

The eCAP inputs connect to any GPIO input through the Input X-BAR. The APWM outputs connect to GPIO pins through the Output X-BAR to OUTPUTx positions in the GPIO mux. See the *GPIO Input X-BAR* section and the *GPIO Output X-BAR, CLB X-BAR, CLB Output X-BAR, and ePWM X-BAR* section.

The eCAP module is clocked by PERx.SYSCLK.

The clock enable bits (ECAP1–ECAP3) in the PCLKCR3 register turn off the eCAP module individually (for low-power operation). Upon reset, ECAP1ENCLK is set to low, indicating that the peripheral clock is off.

Copyright © 2022 Texas Instruments Incorporated

6.14.4.1 eCAP and HRCAP Block Diagram

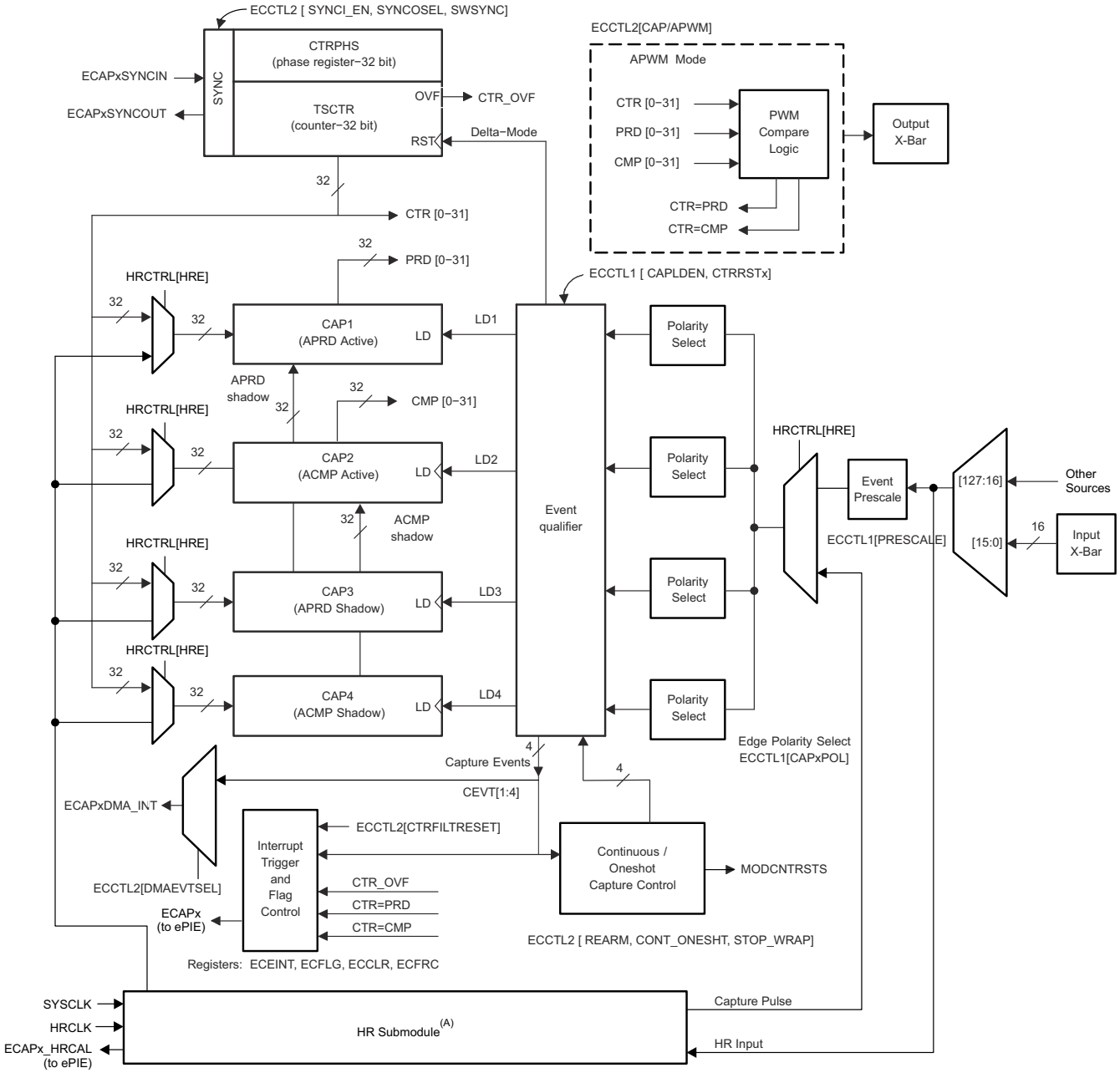

A. The HRCAP submodule is not available on all eCAP modules; in this case, the high-resolution muxes and hardware are not implemented.

Figure 6-53. eCAP and HRCAP Block Diagram

Copyright © 2022 Texas Instruments Incorporated

6.14.4.2 eCAP Synchronization

The eCAP modules can be synchronized with each other by selecting a common SYNCIN source. SYNCIN source for eCAP can be either software sync-in or external sync-in. The external sync-in signal can come from EPWM, eCAP, or X-Bar. The SYNC signal is defined by the selection in the ECAPxSYNCINSEL[SEL] bit for ECAPx as shown in Figure 6-54.

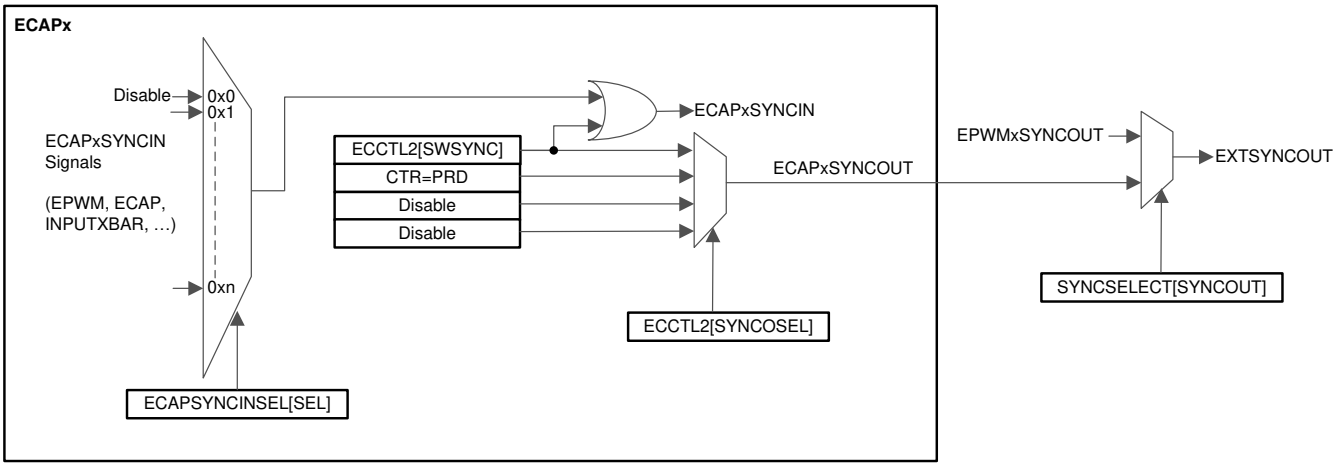

Figure 6-54. eCAP Synchronization Scheme

6.14.4.3 eCAP Electrical Data and Timing

6.14.4.3.1 eCAP Timing Requirements

			MIN	NOM	MAX	UNIT
$t_{w(CAP)}$	Capture input pulse width	Asynchronous	$2t_{c(SYSCLK)}$			ns
		Synchronous	$2t_{c(SYSCLK)}$			
		With input qualifier	$1t_{c(SYSCLK)} + t_{w_(IQSW)}$			

6.14.4.3.2 eCAP Switching Characteristics

over recommended operating conditions (unless otherwise noted)

PARAMETER		MIN	TYP	MAX	UNIT
$t_{w(APWM)}$	Pulse duration, APWMx output high/low	20			ns

Copyright © 2022 Texas Instruments Incorporated

6.14.5 High-Resolution Capture (HRCAP)

The eCAP3 module can be configured as high-resolution capture (HRCAP) submodules. The HRCAP submodule measures the difference, in time, between pulses asynchronously to the system clock. This submodule is new to the eCAP Type 1 module, and features many enhancements over the Type 0 HRCAP module.

Applications for the HRCAP include:

- Capacitive touch applications
- High-resolution period and duty-cycle measurements of pulse train cycles
- Instantaneous speed measurements
- Instantaneous frequency measurements
- Voltage measurements across an isolation boundary
- Distance/sonar measurement and scanning
- Flow measurements

The HRCAP submodule includes the following features:

- Pulse-width capture in either non-high-resolution or high-resolution modes
- Absolute mode pulse-width capture
- Continuous or "one-shot" capture
- Capture on either falling or rising edge
- Continuous mode capture of pulse widths in 4-deep buffer
- Hardware calibration logic for precision high-resolution capture
- All of the resources in this list are available on any pin using the Input X-BAR.

The HRCAP submodule includes one high-resolution capture channel in addition to a calibration block. The calibration block allows the HRCAP submodule to be continually recalibrated, at a set interval, with no “down time”. Because the HRCAP submodule now uses the same hardware as its respective eCAP, if the HRCAP is used, the corresponding eCAP will be unavailable.

Each high-resolution-capable channel has the following independent key resources.

- All hardware of the respective eCAP
- High-resolution calibration logic
- Dedicated calibration interrupt

6.14.5.1 eCAP and HRCAP Block Diagram

For the HRCAP Block Diagram, see the eCAP and HRCAP Block Diagram in the *Enhanced Capture (eCAP)* section.

Copyright © 2022 Texas Instruments Incorporated

6.14.5.2 HRCAP Electrical Data and Timing

6.14.5.2.1 HRCAP Switching Characteristics

over recommended operating conditions (unless otherwise noted)

PARAMETER	TEST CONDITIONS	MIN	TYP	MAX	UNIT
Input pulse width		110			ns
Accuracy(1) (2) (3) (4)	Measurement length ≤ 5 µs		±390	540	ps
	Measurement length > 5 µs		±450	1450	ps
Standard deviation			See HRCAP Standard Deviation Characteristics figure		
Resolution			300		ps

(1) Value obtained using an oscillator of 100 PPM, oscillator accuracy directly affects the HRCAP accuracy.
(2) Measurement is completed using rising-rising or falling-falling edges
(3) Opposite polarity edges will have an additional inaccuracy due to the difference between V_{IH} and V_{IL}. This effect is dependent on the signal's slew rate.
(4) Accuracy only applies to time-converted measurements.

6.14.5.2.2 HRCAP Figure and Graph

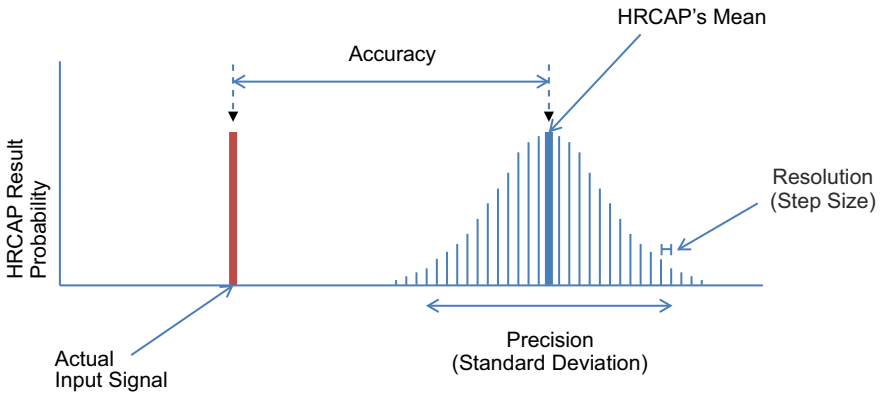

A. The HRCAP has some variation in performance, this results in a probability distribution which is described using the following terms:
- Accuracy: The time difference between the input signal and the mean of the HRCAP's distribution.
- Precision: The width of the HRCAP's distribution, this is given as a standard deviation.
- Resolution: The minimum measurable increment.

Figure 6-55. HRCAP Accuracy Precision and Resolution

Copyright © 2022 Texas Instruments Incorporated

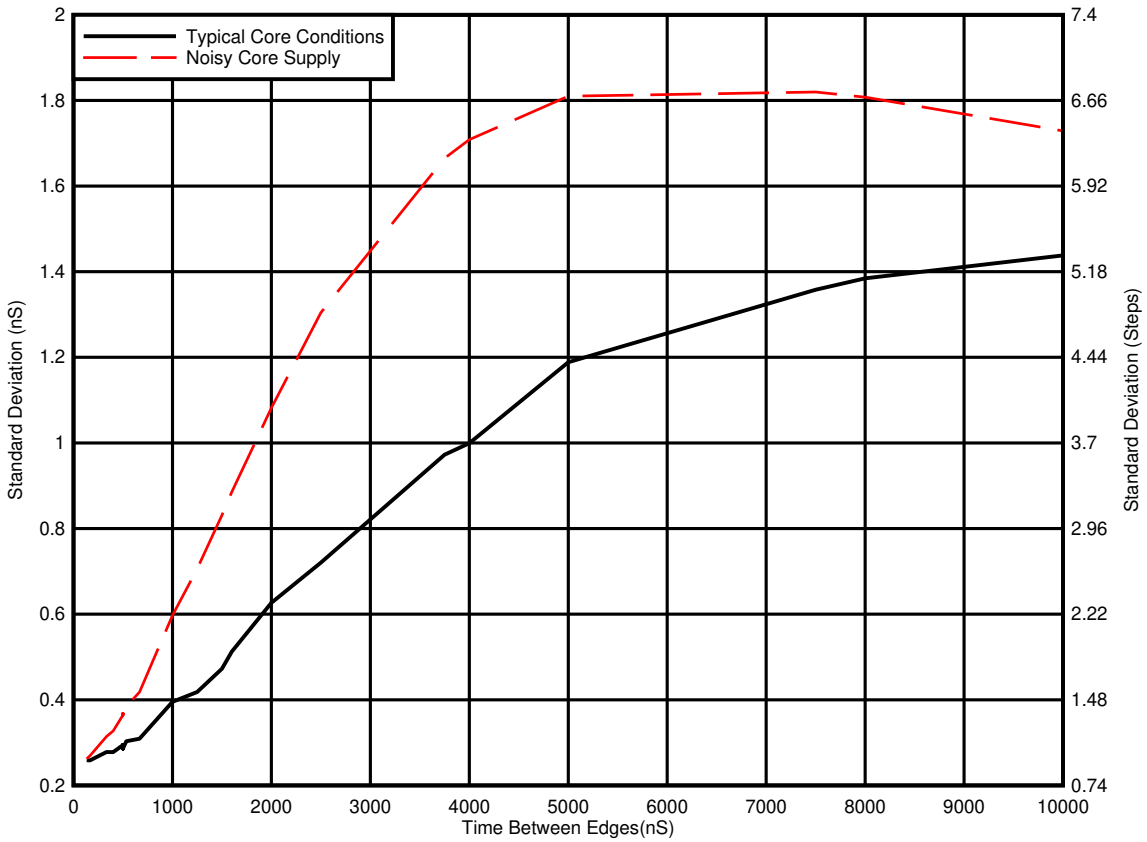

A. Typical core conditions: All peripheral clocks are enabled.
B. Noisy core supply: All core clocks are enabled and disabled with a regular period during the measurement.
C. Fluctuations in current and voltage on the 1.2-V rail cause the standard deviation of the HRCAP to rise. Care should be taken to ensure that the 1.2-V supply is clean, and that noisy internal events, such as enabling and disabling clock trees, have been minimized while using the HRCAP.

Figure 6-56. HRCAP Standard Deviation Characteristics

Copyright © 2022 Texas Instruments Incorporated

6.14.6 Enhanced Quadrature Encoder Pulse (eQEP)

The eQEP module on this device is Type-2. The eQEP interfaces directly with linear or rotary incremental encoders to obtain position, direction, and speed information from rotating machines used in high-performance motion and position control systems.

The eQEP peripheral contains the following major functional units (see Figure 6-57):

- Programmable input qualification for each pin (part of the GPIO MUX)
- Quadrature decoder unit (QDU)
- Position counter and control unit for position measurement (PCCU)
- Quadrature edge-capture unit for low-speed measurement (QCAP)
- Unit time base for speed/frequency measurement (UTIME)
- Watchdog timer for detecting stalls (QWDOG)
- Quadrature Mode Adapter (QMA)

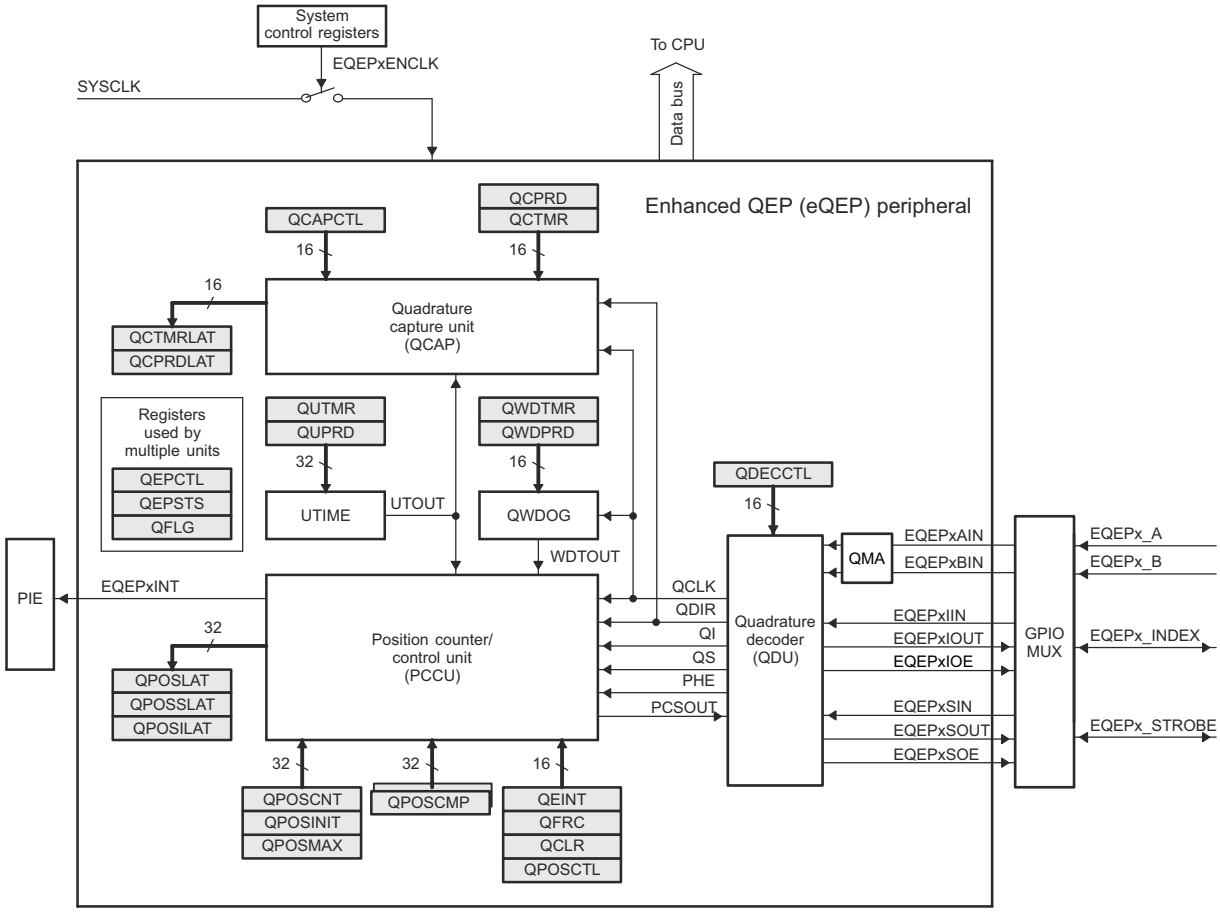

Figure 6-57. eQEP Block Diagram

6.14.6.1 eQEP Electrical Data and Timing

For an explanation of the input qualifier parameters, see the General-Purpose Input Timing Requirements table.

6.14.6.1.1 eQEP Timing Requirements

			MIN	MAX	UNIT
$t_{w(QEPP)}$	QEP input period	Synchronous(1)	$2t_{c(SYSCLK)}$		cycles
		Synchronous with input qualifier	$2[1t_{c(SYSCLK)} + t_{w(IQSW)}]$		
$t_{w(INDEXH)}$	QEP Index Input High time	Synchronous(1)	$2t_{c(SYSCLK)}$		cycles
		Synchronous with input qualifier	$2t_{c(SYSCLK)} + t_{w(IQSW)}$		
$t_{w(INDEXL)}$	QEP Index Input Low time	Synchronous(1)	$2t_{c(SYSCLK)}$		cycles
		Synchronous with input qualifier	$2t_{c(SYSCLK)} + t_{w(IQSW)}$		
$t_{w(STROBH)}$	QEP Strobe High time	Synchronous(1)	$2t_{c(SYSCLK)}$		cycles
		Synchronous with input qualifier	$2t_{c(SYSCLK)} + t_{w(IQSW)}$		
$t_{w(STROBL)}$	QEP Strobe Input Low time	Synchronous(1)	$2t_{c(SYSCLK)}$		cycles
		Synchronous with input qualifier	$2t_{c(SYSCLK)} + t_{w(IQSW)}$		

(1) The GPIO GPxQSELn Asynchronous mode should not be used for eQEP module input pins.

6.14.6.1.2 eQEP Switching Characteristics

over recommended operating conditions (unless otherwise noted)

PARAMETER		MIN	MAX	UNIT
$t_{d(CNTR)xin}$	Delay time, external clock to counter increment		$5t_{c(SYSCLK)}$	cycles
$t_{d(PCS-OUT)QEP}$	Delay time, QEP input edge to position compare sync output		$7t_{c(SYSCLK)}$	cycles

Copyright © 2022 Texas Instruments Incorporated

6.14.7 Sigma-Delta Filter Module (SDFM)

SDFM features include:

- Eight external pins per SDFM module
  - Four sigma-delta data input pins per SDFM module (SD-Dx, where x = 1 to 4)
  - Four sigma-delta clock input pins per SDFM module (SD-Cx, where x = 1 to 4)
- Different configurable modulator clock modes supported:
  - Mode 0: Modulator clock rate equals the modulator data rate.
- Four independent, configurable secondary filter (comparator) units per SDFM module:
  - Four different filter type selection (Sinc1/Sinc2/SincFast/Sinc3) options available
  - Ability to detect over-value condition, under-value condition, and Threshold-crossing conditions
    1. Two independent Higher Threshold comparators (used to detect over-value condition)
    2. Two independent Lower Threshold comparators (used to detect under-value condition)
    3. One independent Threshold-Crossing comparator (used to measure duty cycle/frequency with eCAP)
  - OSR value for comparator filter unit (COSR) programmable from 1 to 32
- Four independent configurable primary filter (data filter) units per SDFM module:
  - Four different filter type selection (Sinc1/Sinc2/SincFast/Sinc3) options available
  - OSR value for data filter unit (DOSR) programmable from 1 to 256
  - Ability to enable or disable (or both) individual filter module
  - Ability to synchronize all four independent filters of an SDFM module by using the Master Filter Enable (MFE) bit or by using PWM signals
- Data filter output can be represented in either 16 bits or 32 bits.
- Data filter unit has a programmable mode FIFO to reduce interrupt overhead. The FIFO has the following features:
  - The primary filter (data filter) has a 16-deep x 32-bit FIFO.
  - The FIFO can interrupt the CPU after programmable number of data-ready events.
  - FIFO Wait-for-Sync feature: Ability to ignore data-ready events until the PWM synchronization signal (SDSYNC) is received. Once the SDSYNC event is received, the FIFO is populated on every data-ready event.
  - Data filter output can be represented in either 16 bits or 32 bits.
- PWMx.SOCA/SOCB can be configured to serve as SDSYNC source on a per-data-filter-channel basis.
- PWMs can be used to generate a modulator clock for sigma-delta modulators.
- Configurable Input Qualification available for both SD-Cx and SD-Dx
- Ability to use one filter channel clock (SD-C1) to provide clock to other filter clock channels.
- Configurable digital filter available on comparator filter events to blankout comparator events caused by spurious noise

Figure 6-58 shows the SDFM module block diagram.

Copyright © 2022 Texas Instruments Incorporated

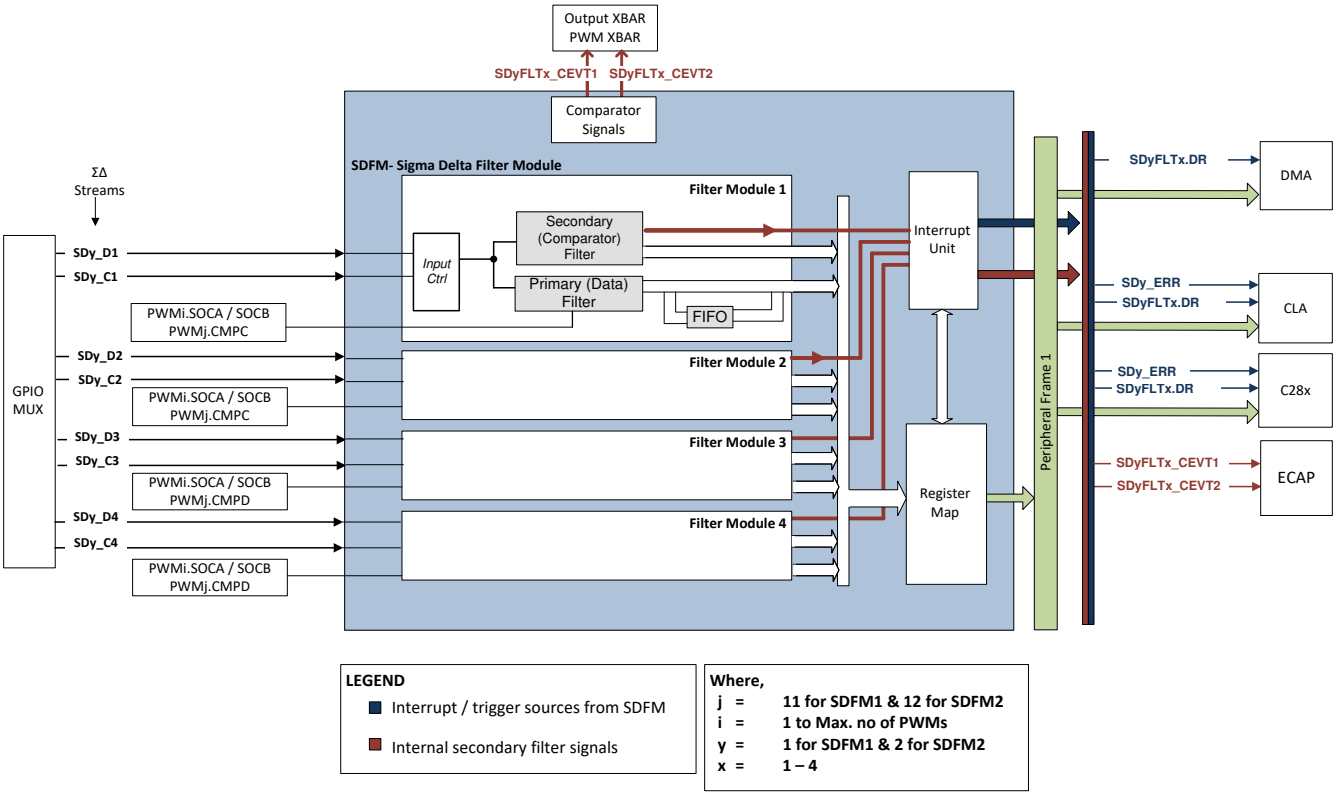

Figure 6-58. Sigma Delta Filter Module (SDFM) Block Diagram

6.14.7.1 SDFM Electrical Data and Timing

WARNING

Special precautions should be taken on both SD-Cx and SD-Dx signals to ensure a clean and noise-free signal that meets SDFM timing requirements. Precautions such as series termination resistors for ringing noise due to any impedance mismatch of clock driver and spacing of traces from other noisy signals are recommended.

Note

The SDFM SD-Cx and SD-Dx signals, when synchronized to PLLRAWCLK, provide protection against SDFM module corruption due to occasional random noise glitches that may result in a false comparator trip and filter output. However, the signals do not provide protection against persistent violations of the above timing requirements. Timing violations will result in data corruption proportional to the number of bits which violate the requirements.

6.14.7.1.1 SDFM Timing Requirements When Using Asynchronous GPIO (ASYNC) Option

		MIN	MAX	UNIT
Mode 0				
$t_{c(SDC)M0}$	Cycle time, SDx_Cy	4 * $t_{c(PLLRAWCLK)}$	256 * SYSCLK period	ns
$t_{w(SDDHL)M0}$	Pulse duration, SDx_Dy (high / Low)	2 * $t_{c(PLLRAWCLK)}$		ns
$t_{su(SDDV-SDCH)M0}$	Setup time, SDx_Dy valid before SDx_Cy goes high	1 * $t_{c(PLLRAWCLK)}$ + 3		ns
$t_{h(SDCH-SDD)M0}$	Hold time, SDx_Dy wait after SDx_Cy goes high	1 * $t_{c(PLLRAWCLK)}$ + 3		ns

Copyright © 2022 Texas Instruments Incorporated

6.15 Communications Peripherals

6.15.1 Controller Area Network (CAN)

Note

The CAN module uses the IP known as *DCAN*. This document uses the names *CAN* and *DCAN* interchangeably to reference this peripheral.

The CAN module implements the following features:

- Complies with ISO11898-1 (Bosch® CAN protocol specification 2.0 A and B)
- Bit rates up to 1 Mbps
- Multiple clock sources
- 32 message objects (mailboxes), each with the following properties:
  - Configurable as receive or transmit
  - Configurable with standard (11-bit) or extended (29-bit) identifier
  - Supports programmable identifier receive mask
  - Supports data and remote frames
  - Holds 0 to 8 bytes of data
  - Parity-checked configuration and data RAM
- Individual identifier mask for each message object
- Programmable FIFO mode for message objects
- Programmable loopback modes for self-test operation
- Suspend mode for debug support
- Software module reset
- Automatic bus on after bus-off state by a programmable 32-bit timer
- Two interrupt lines
- DMA support

Note

For a CAN bit clock of 100 MHz, the smallest bit rate possible is 3.90625 kbps.

Note

The accuracy of the on-chip zero-pin oscillator is in the INTOSC Characteristics table. Depending on parameters such as the CAN bit timing settings, bit rate, bus length, and propagation delay, the accuracy of this oscillator may not meet the requirements of the CAN protocol. In this situation, an external clock source must be used.

Figure 6-59 shows the CAN block diagram.

Copyright © 2022 Texas Instruments Incorporated

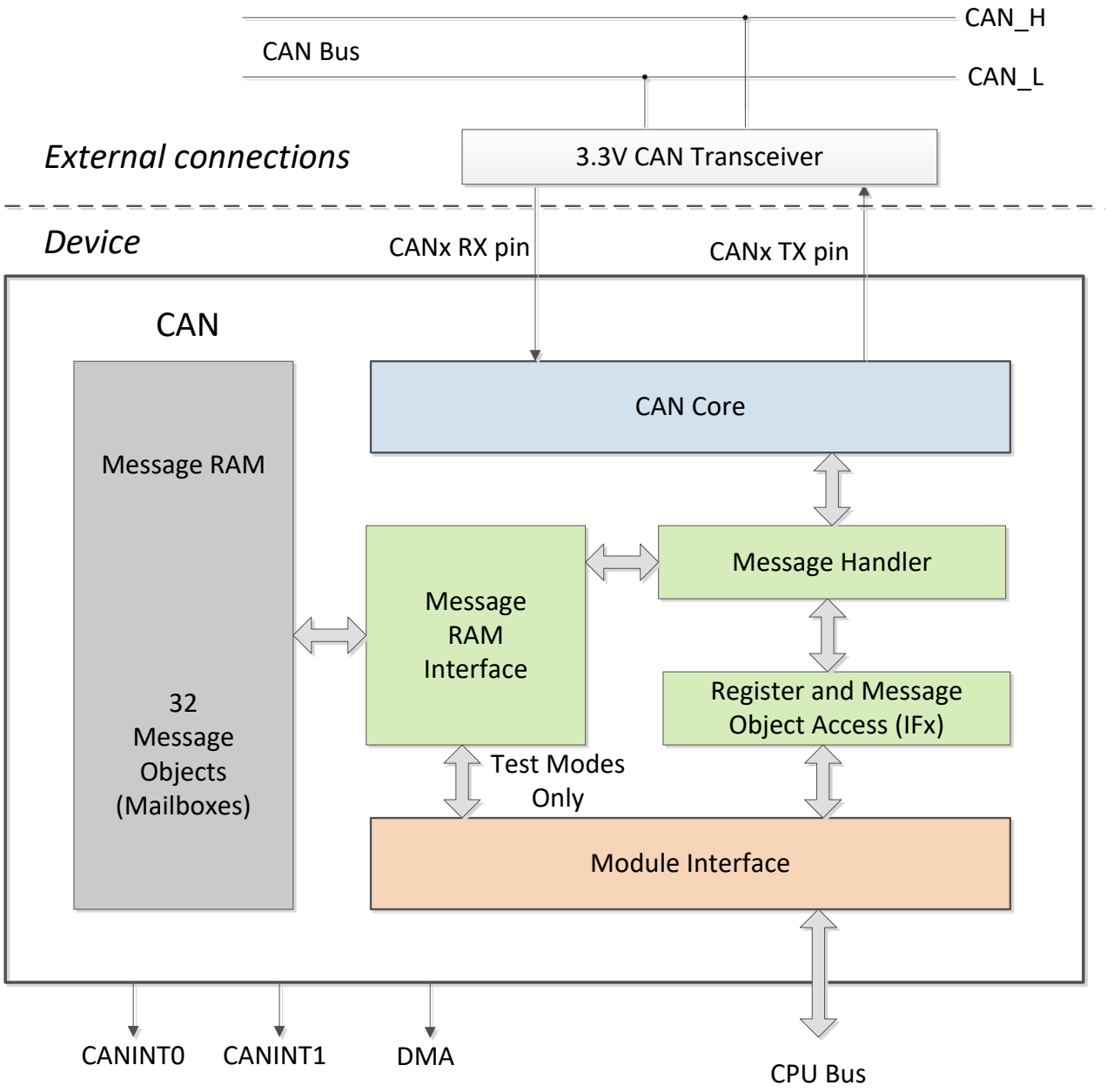

Figure 6-59. CAN Block Diagram

Copyright © 2022 Texas Instruments Incorporated

6.15.2 Modular Controller Area Network (MCAN)

The Controller Area Network (CAN) is a serial communications protocol that efficiently supports distributed real-time control with a high level of reliability. CAN has high immunity to electrical interference and the ability to detect various type of errors. In CAN, many short messages are broadcast to the entire network, which provides data consistency in every node of the system.

The MCAN module supports both classic CAN and CAN FD (CAN with flexible data-rate) protocols. The CAN FD feature allows higher throughput and increased payload per data frame. Classic CAN and CAN FD devices may coexist on the same network without any conflict provided that partial network transceivers, which can detect and ignore CAN FD without generating bus errors, are used by the classic CAN devices. The MCAN module is compliant to ISO 11898-1:2015.

Note

The availabilty of the CAN FD feature is dependent on the device's part number. Refer to the device data sheet for more information.

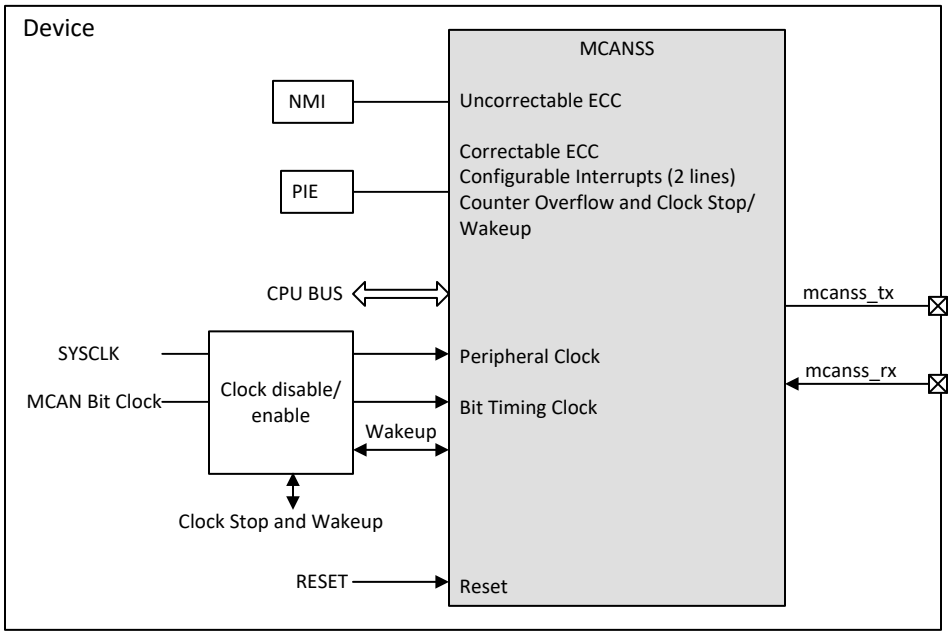

Figure 6-60. MCAN Module Overview

The MCAN module implements the following features:

- Conforms with CAN Protocol 2.0 A, B and ISO 11898-1:2015
- Full CAN FD support (up to 64 data bytes)
- AUTOSAR and SAE J1939 support
- Up to 32 dedicated transmit buffers
- Configurable transmit FIFO, up to 32 elements
- Configurable transmit queue, up to 32 elements
- Configurable transmit Event FIFO, up to 32 elements
- Up to 64 dedicated receive buffers
- Two configurable receive FIFOs, up to 64 elements each
- Up to 128 filter elements
- Loop-back mode for self-test
- Maskable interrupt (two configurable interrupt lines, correctable ECC, counter overflow and clock stop/ wakeup)
- Non-maskable interrupt (uncorrectable ECC)

Copyright © 2022 Texas Instruments Incorporated

- Two clock domains (CAN clock/host clock)
- ECC check for Message RAM
- Clock stop and wakeup support
- Timestamp counter

Non-supported features:

- Host bus firewall
- Clock calibration
- Debug over CAN

Copyright © 2022 Texas Instruments Incorporated

6.15.3 Inter-Integrated Circuit (I2C)

The I2C module has the following features:

- Compliance with the NXP Semiconductors I^2C-bus specification (version 2.1):
  - Support for 8-bit format transfers
  - 7-bit and 10-bit addressing modes
  - General call
  - START byte mode
  - Support for multiple master-transmitters and slave-receivers
  - Support for multiple slave-transmitters and master-receivers
  - Combined master transmit/receive and receive/transmit mode
  - Data transfer rate from 10 kbps up to 400 kbps (Fast-mode)
- Supports voltage thresholds compatible to:
  - SMBus 2.0 and below
  - PMBus 1.2 and below
- One 16-byte receive FIFO and one 16-byte transmit FIFO
- Supports two ePIE interrupts
  - I2Cx interrupt – Any of the below conditions can be configured to generate an I2Cx interrupt:
    - Transmit Ready
    - Receive Ready
    - Register-Access Ready
    - No-Acknowledgment
    - Arbitration-Lost
    - Stop Condition Detected
    - Addressed-as-Slave
  - I2Cx_FIFO interrupts:
    - Transmit FIFO interrupt
    - Receive FIFO interrupt
- Module enable and disable capability
- Free data format mode

Figure 6-61 shows how the I2C peripheral module interfaces within the device.

Copyright © 2022 Texas Instruments Incorporated

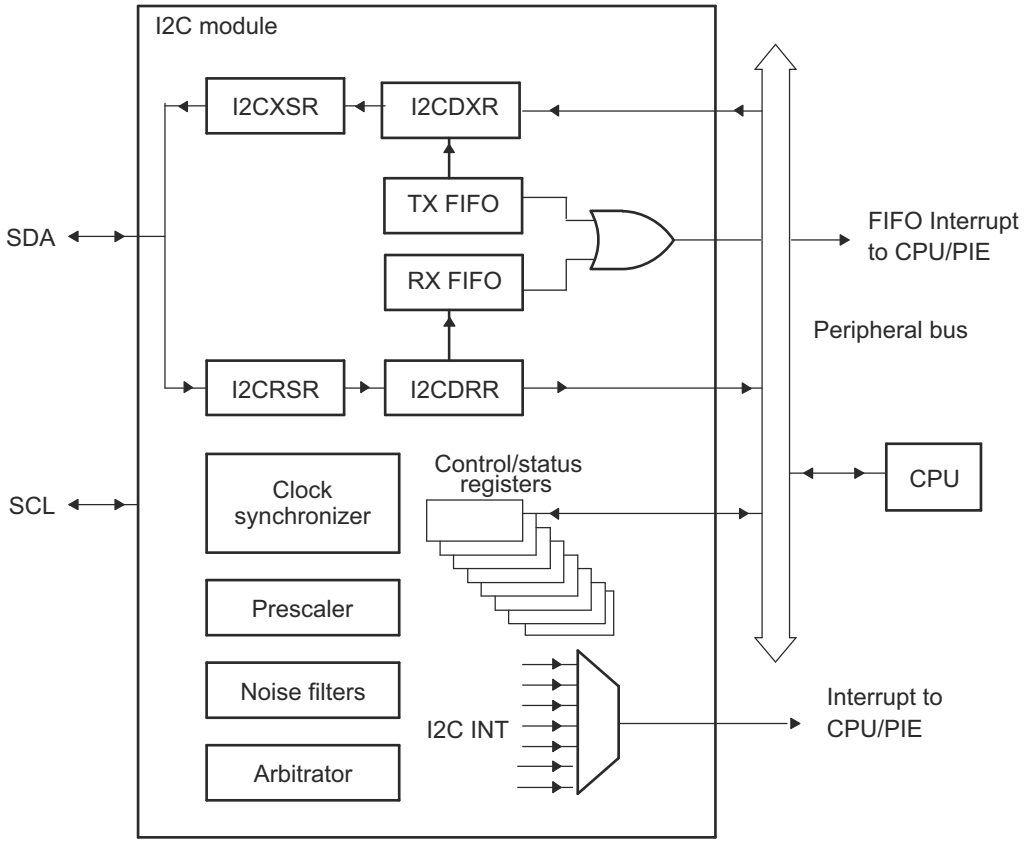

Figure 6-61. I2C Peripheral Module Interfaces

Copyright © 2022 Texas Instruments Incorporated

6.15.3.1 I2C Electrical Data and Timing

Note

To meet all of the I2C protocol timing specifications, the I2C module clock must be configured in the range from 7 MHz to 12 MHz.

6.15.3.1.1 I2C Timing Requirements

NO.			MIN	MAX	UNIT
Standard mode					
T0	f_{mod}	I2C module frequency	7	12	MHz
T1	$t_{h(SDA-SCL)START}$	Hold time, START condition, SCL fall delay after SDA fall	4.0		µs
T2	$t_{su(SCL-SDA)START}$	Setup time, Repeated START, SCL rise before SDA fall delay	4.0		µs
T3	$t_{h(SCL-DAT)}$	Hold time, data after SCL fall	0		µs
T4	$t_{su(DAT-SCL)}$	Setup time, data before SCL rise	250		ns
T5	$t_{r(SDA)}$	Rise time, SDA		1000	ns
T6	$t_{r(SCL)}$	Rise time, SCL		1000	ns
T7	$t_{f(SDA)}$	Fall time, SDA		300	ns
T8	$t_{f(SCL)}$	Fall time, SCL		300	ns
T9	$t_{su(SCL-SDA)STOP}$	Setup time, STOP condition, SCL rise before SDA rise delay	4.0		µs
T10	$t_{w(SP)}$	Pulse duration of spikes that will be suppressed by filter	0	50	ns
T11	C_b	capacitance load on each bus line		400	pF
Fast mode					
T0	f_{mod}	I2C module frequency	7	12	MHz
T1	$t_{h(SDA-SCL)START}$	Hold time, START condition, SCL fall delay after SDA fall	0.6		µs
T2	$t_{su(SCL-SDA)START}$	Setup time, Repeated START, SCL rise before SDA fall delay	0.6		µs
T3	$t_{h(SCL-DAT)}$	Hold time, data after SCL fall	0		µs
T4	$t_{su(DAT-SCL)}$	Setup time, data before SCL rise	100		ns
T5	$t_{r(SDA)}$	Rise time, SDA	20	300	ns
T6	$t_{r(SCL)}$	Rise time, SCL	20	300	ns
T7	$t_{f(SDA)}$	Fall time, SDA	11.4	300	ns
T8	$t_{f(SCL)}$	Fall time, SCL	11.4	300	ns
T9	$t_{su(SCL-SDA)STOP}$	Setup time, STOP condition, SCL rise before SDA rise delay	0.6		µs
T10	$t_{w(SP)}$	Pulse duration of spikes that will be suppressed by filter	0	50	ns
T11	C_b	capacitance load on each bus line		400	pF

6.15.3.1.2 I2C Switching Characteristics

over recommended operating conditions (unless otherwise noted)

NO.	PARAMETER		TEST CONDITIONS	MIN	MAX	UNIT
Standard mode						
S1	f_{SCL}	SCL clock frequency		0	100	kHz
S2	T_{SCL}	SCL clock period		10		µs
S3	$t_{w(SCLL)}$	Pulse duration, SCL clock low		4.7		µs

Copyright © 2022 Texas Instruments Incorporated

6.15.3.1.2 I2C Switching Characteristics (continued)

over recommended operating conditions (unless otherwise noted)

NO.	PARAMETER		TEST CONDITIONS	MIN	MAX	UNIT
S4	$t_{w(SCLH)}$	Pulse duration, SCL clock high		4.0		µs
S5	t_{BUF}	Bus free time between STOP and START conditions		4.7		µs
S6	$t_{v(SCL-DAT)}$	Valid time, data after SCL fall			3.45	µs
S7	$t_{v(SCL-ACK)}$	Valid time, Acknowledge after SCL fall			3.45	µs
S8	I_I	Input current on pins	0.1 V_{bus} < V_i < 0.9 V_{bus}	–10	10	µA
Fast mode						
S1	f_{SCL}	SCL clock frequency		0	400	kHz
S2	T_{SCL}	SCL clock period		2.5		µs
S3	$t_{w(SCLL)}$	Pulse duration, SCL clock low		1.3		µs
S4	$t_{w(SCLH)}$	Pulse duration, SCL clock high		0.6		µs
S5	t_{BUF}	Bus free time between STOP and START conditions		1.3		µs
S6	$t_{v(SCL-DAT)}$	Valid time, data after SCL fall			0.9	µs
S7	$t_{v(SCL-ACK)}$	Valid time, Acknowledge after SCL fall			0.9	µs
S8	I_I	Input current on pins	0.1 V_{bus} < V_i < 0.9 V_{bus}	–10	10	µA

6.15.3.1.3 I2C Timing Diagram

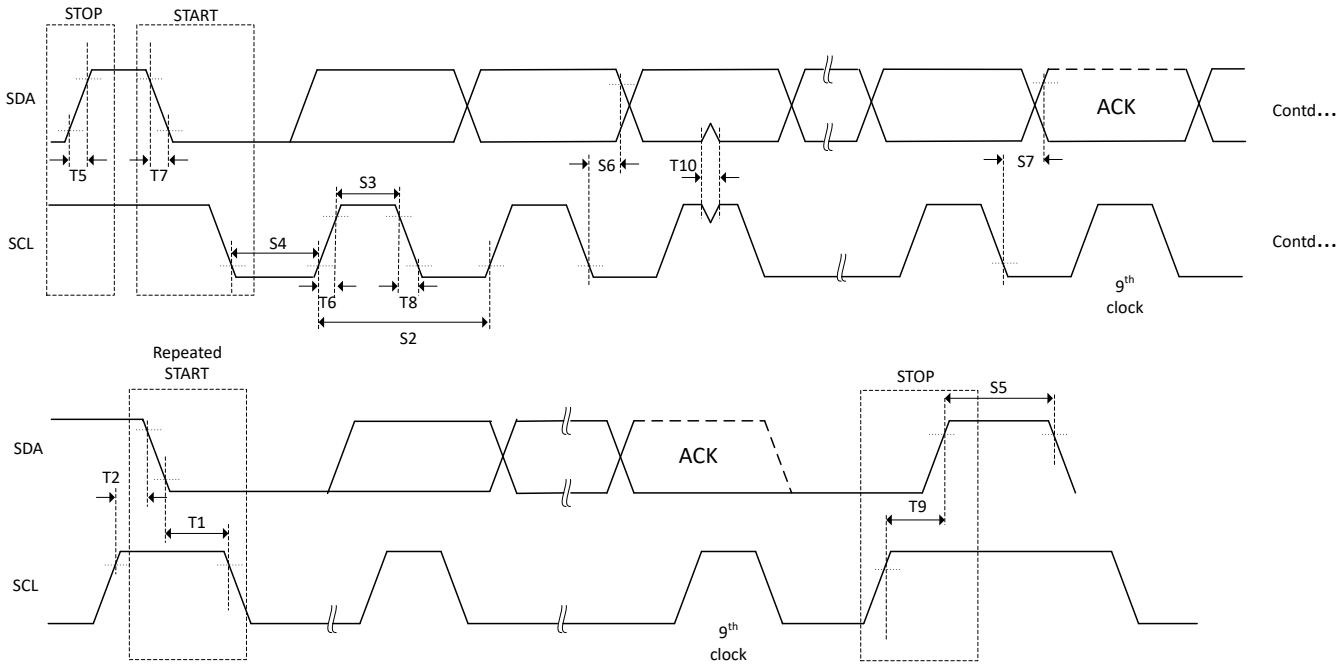

Figure 6-62. I2C Timing Diagram

Copyright © 2022 Texas Instruments Incorporated

6.15.4 Power Management Bus (PMBus) Interface

The PMBus module has the following features:

- Compliance with the SMI Forum PMBus Specification (Part I v1.0 and Part II v1.1)
- Supports voltage thresholds compatible to:
  - PMBus 1.2 and below
  - SMBus 2.0 and below
- Support for master and slave modes
- Support for I2C mode
- Support for two speeds:
  - Standard Mode: Up to 100 kHz
  - Fast Mode: 400 kHz
- Packet error checking
- CONTROL and ALERT signals
- Clock high and low time-outs
- Four-byte transmit and receive buffers
- One maskable interrupt, which can be generated by several conditions:
  - Receive data ready
  - Transmit buffer empty
  - Slave address received
  - End of message
  - ALERT input asserted
  - Clock low time-out
  - Clock high time-out
  - Bus free

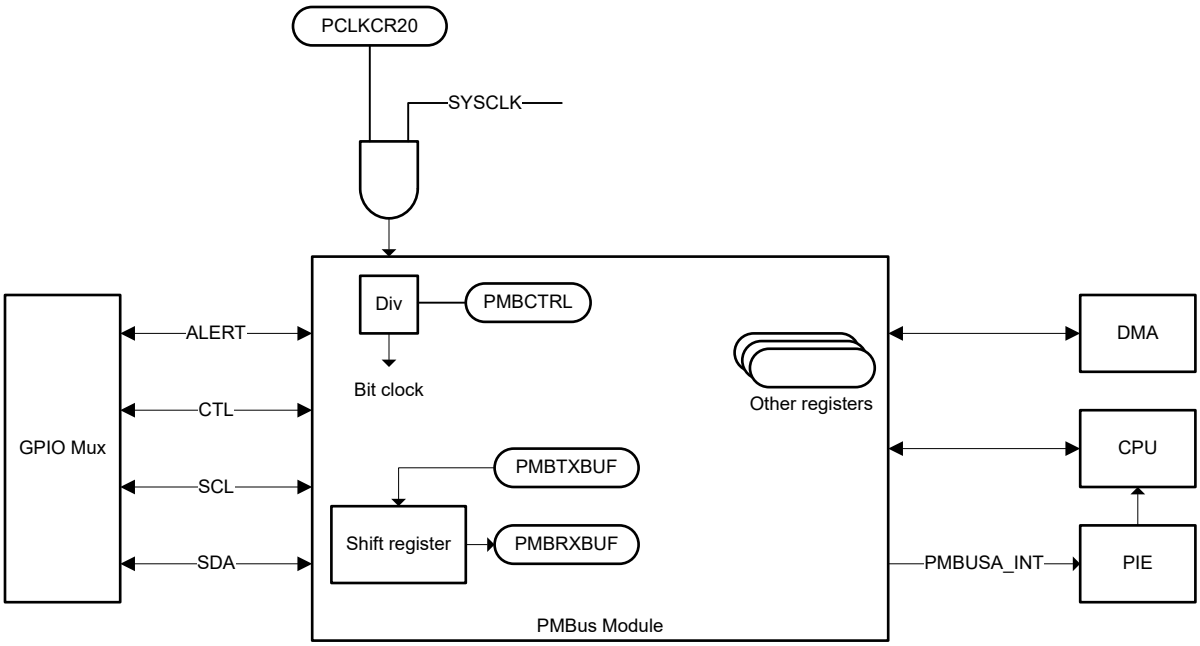

Figure 6-63. PMBus Block Diagram

6.15.4.1 PMBus Electrical Data and Timing

6.15.4.1.1 PMBus Electrical Characteristics

over recommended operating conditions (unless otherwise noted)

PARAMETER		TEST CONDITIONS	MIN	TYP	MAX	UNIT
V_{IL}	Valid low-level input voltage				0.8	V
V_{IH}	Valid high-level input voltage		2.1		VDDIO	V
V_{OL}	Low-level output voltage	At I_{pullup} = 4 mA			0.4	V
I_{OL}	Low-level output current	V_{OL} ≤ 0.4 V	4			mA
t_{SP}	Pulse width of spikes that must be suppressed by the input filter		0		50	ns
I_i	Input leakage current on each pin	0.1 Vbus < Vi < 0.9 Vbus	–10		10	µA
C_i	Capacitance on each pin				10	pF

6.15.4.1.2 PMBus Fast Mode Switching Characteristics

over recommended operating conditions (unless otherwise noted)

PARAMETER		TEST CONDITIONS	MIN	TYP	MAX	UNIT
f_{SCL}	SCL clock frequency		10		400	kHz
t_{BUF}	Bus free time between STOP and START conditions		1.3			µs
$t_{HD;STA}$	START condition hold time -- SDA fall to SCL fall delay		0.6			µs
$t_{SU;STA}$	Repeated START setup time -- SCL rise to SDA fall delay		0.6			µs
$t_{SU;STO}$	STOP condition setup time -- SCL rise to SDA rise delay		0.6			µs
$t_{HD;DAT}$	Data hold time after SCL fall		300			ns
$t_{SU;DAT}$	Data setup time before SCL rise		100			ns
$t_{Timeout}$	Clock low time-out		25		35	ms
t_{LOW}	Low period of the SCL clock		1.3			µs
t_{HIGH}	High period of the SCL clock		0.6		50	µs
$t_{LOW;SEXT}$	Cumulative clock low extend time (slave device)	From START to STOP			25	ms
$t_{LOW;MEXT}$	Cumulative clock low extend time (master device)	Within each byte			10	ms
t_r	Rise time of SDA and SCL	5% to 95%	20		300	ns
t_f	Fall time of SDA and SCL	95% to 5%	20		300	ns

Copyright © 2022 Texas Instruments Incorporated

6.15.4.1.3 PMBus Standard Mode Switching Characteristics

over recommended operating conditions (unless otherwise noted)

PARAMETER		TEST CONDITIONS	MIN	TYP	MAX	UNIT
f_{SCL}	SCL clock frequency		10		100	kHz
t_{BUF}	Bus free time between STOP and START conditions		4.7			µs
$t_{HD;STA}$	START condition hold time -- SDA fall to SCL fall delay		4			µs
$t_{SU;STA}$	Repeated START setup time -- SCL rise to SDA fall delay		4.7			µs
$t_{SU;STO}$	STOP condition setup time -- SCL rise to SDA rise delay		4			µs
$t_{HD;DAT}$	Data hold time after SCL fall		300			ns
$t_{SU;DAT}$	Data setup time before SCL rise		250			ns
$t_{Timeout}$	Clock low time-out		25		35	ms
t_{LOW}	Low period of the SCL clock		4.7			µs
t_{HIGH}	High period of the SCL clock		4		50	µs
$t_{LOW;SEXT}$	Cumulative clock low extend time (slave device)	From START to STOP			25	ms
$t_{LOW;MEXT}$	Cumulative clock low extend time (master device)	Within each byte			10	ms
t_r	Rise time of SDA and SCL				1000	ns
t_f	Fall time of SDA and SCL				300	ns

Copyright © 2022 Texas Instruments Incorporated

6.15.5 Serial Communications Interface (SCI)

The SCI is a 2-wire asynchronous serial port, commonly known as a UART. The SCI module supports digital communications between the CPU and other asynchronous peripherals that use the standard non-return-to-zero (NRZ) format

The SCI receiver and transmitter each have a 16-level-deep FIFO for reducing servicing overhead, and each has its own separate enable and interrupt bits. Both can be operated independently for half-duplex communication, or simultaneously for full-duplex communication. To specify data integrity, the SCI checks received data for break detection, parity, overrun, and framing errors. The bit rate is programmable to different speeds through a 16-bit baud-select register.

Features of the SCI module include:

- Two external pins:
  - SCITXD: SCI transmit-output pin
  - SCIRXD: SCI receive-input pin
  - Baud rate programmable to 64K different rates
- Data-word format
  - 1 start bit
  - Data-word length programmable from 1 to 8 bits
  - Optional even/odd/no parity bit
  - 1 or 2 stop bits
- Four error-detection flags: parity, overrun, framing, and break detection
- Two wake-up multiprocessor modes: idle-line and address bit
- Half- or full-duplex operation
- Double-buffered receive and transmit functions
- Transmitter and receiver operations can be accomplished through interrupt-driven or polled algorithms with status flags.
  - Transmitter: TXRDY flag (transmitter-buffer register is ready to receive another character) and TX EMPTY flag (transmitter-shift register is empty)
  - Receiver: RXRDY flag (receiver-buffer register is ready to receive another character), BRKDT flag (break condition occurred), and RX ERROR flag (monitoring four interrupt conditions)
- Separate enable bits for transmitter and receiver interrupts (except BRKDT)
- NRZ format
- Auto baud-detect hardware logic
- 16-level transmit and receive FIFO

Note

All registers in this module are 8-bit registers. When a register is accessed, the register data is in the lower byte (bits 7–0), and the upper byte (bits 15–8) is read as zeros. Writing to the upper byte has no effect.

Figure 6-64 shows the SCI block diagram.

Copyright © 2022 Texas Instruments Incorporated

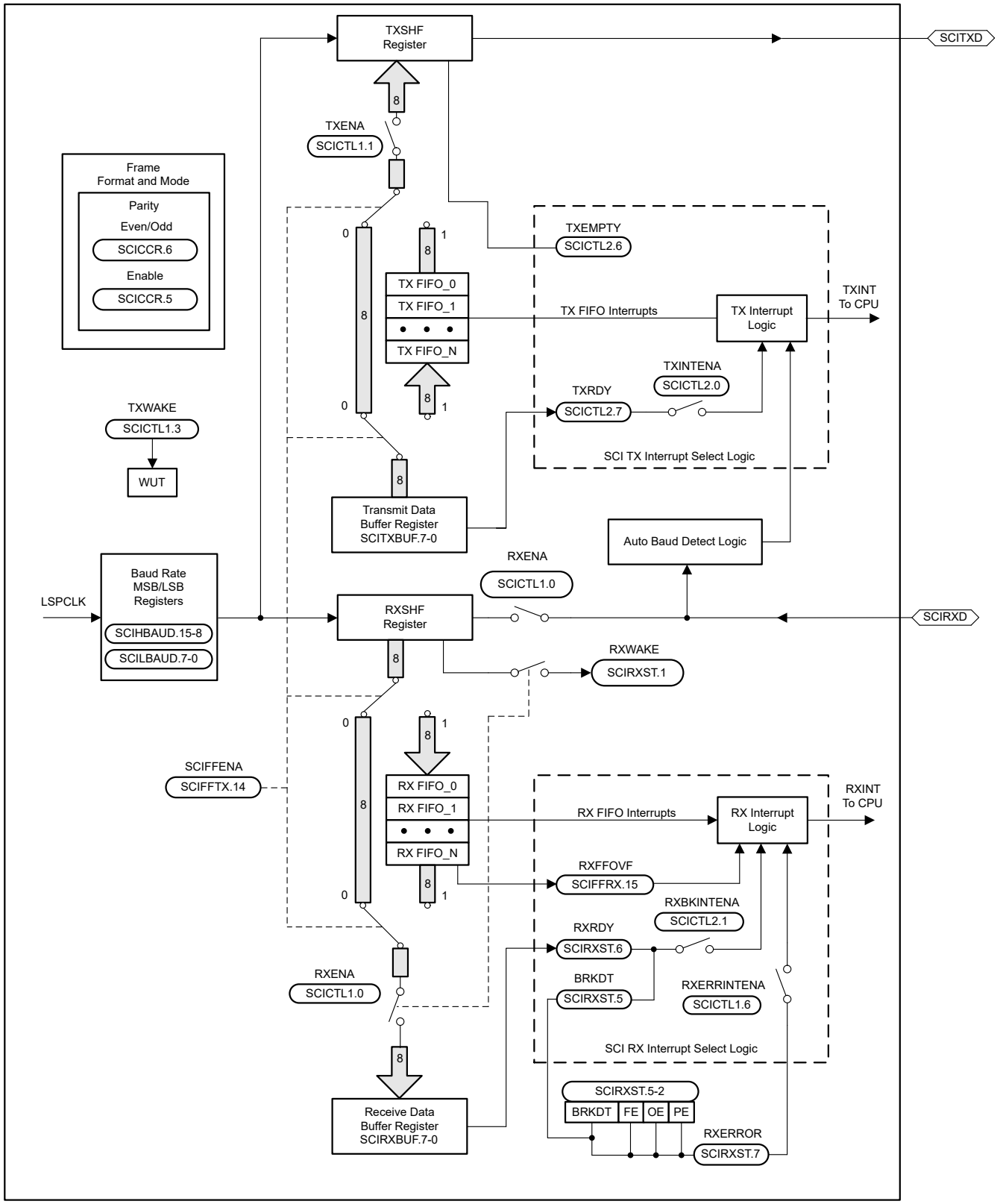

Figure 6-64. SCI Block Diagram

6.15.6 Serial Peripheral Interface (SPI)

The serial peripheral interface (SPI) is a high-speed synchronous serial input and output (I/O) port that allows a serial bit stream of programmed length (1 to 16 bits) to be shifted into and out of the device at a programmed bit-transfer rate. The SPI is normally used for communications between the MCU controller and external peripherals or another controller. Typical applications include external I/O or peripheral expansion through devices such as shift registers, display drivers, and analog-to-digital converters (ADCs). Multidevice communications are supported by the master or slave operation of the SPI. The port supports a 16-level, receive and transmit FIFO for reducing CPU servicing overhead.

The SPI module features include:

- SPISOMI: SPI slave-output/master-input pin
- SPISIMO: SPI slave-input/master-output pin
- $\overline{\text{SPISTE}}$: SPI slave transmit-enable pin
- SPICLK: SPI serial-clock pin
- Two operational modes: Master and Slave
- Baud rate: 125 different programmable rates. The maximum baud rate that can be employed is limited by the maximum speed of the I/O buffers used on the SPI pins.
- Data word length: 1 to 16 data bits
- Four clocking schemes (controlled by clock polarity and clock phase bits) include:
  - Falling edge without phase delay: SPICLK active-high. SPI transmits data on the falling edge of the SPICLK signal and receives data on the rising edge of the SPICLK signal.
  - Falling edge with phase delay: SPICLK active-high. SPI transmits data one half-cycle ahead of the falling edge of the SPICLK signal and receives data on the falling edge of the SPICLK signal.
  - Rising edge without phase delay: SPICLK inactive-low. SPI transmits data on the rising edge of the SPICLK signal and receives data on the falling edge of the SPICLK signal.
  - Rising edge with phase delay: SPICLK inactive-low. SPI transmits data one half-cycle ahead of the rising edge of the SPICLK signal and receives data on the rising edge of the SPICLK signal.
- Simultaneous receive and transmit operation (transmit function can be disabled in software)
- Transmitter and receiver operations are accomplished through either interrupt-driven or polled algorithm
- 16-level transmit/receive FIFO
- DMA support
- High-speed mode
- Delayed transmit control
- 3-wire SPI mode
- $\overline{\text{SPISTE}}$ inversion for digital audio interface receive mode on devices with two SPI modules

Figure 6-65 shows the SPI CPU interfaces.

Copyright © 2022 Texas Instruments Incorporated

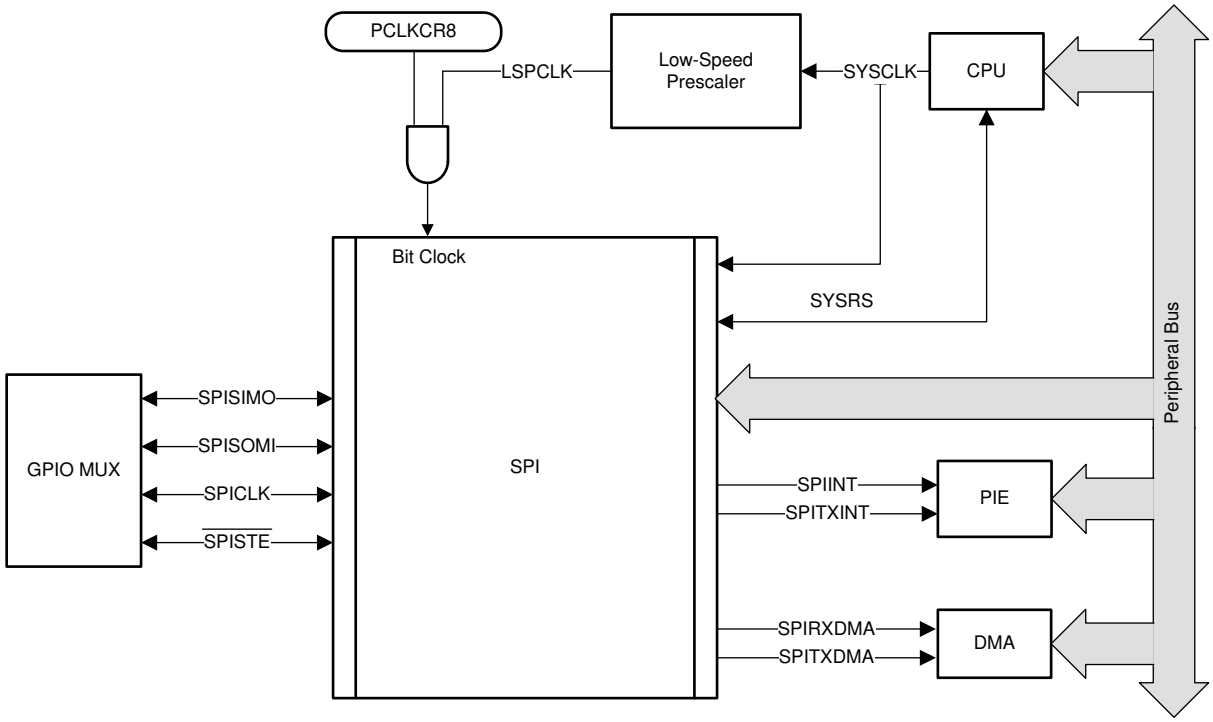

Figure 6-65. SPI CPU Interface

6.15.6.1 SPI Master Mode Timings

The following section contains the SPI Master Mode Timings. For more information about the SPI in High-Speed mode, see the Serial Peripheral Interface (SPI) chapter of the *TMS320F28003x Real-Time Microcontrollers Technical Reference Manual*.

Note

All timing parameters for SPI High-Speed Mode assume a load capacitance of 5 pF on SPICLK, SPISIMO, and SPISOMI.

6.15.6.1.1 SPI Master Mode Timing Requirements

NO.			(BRR + 1) (1)	MIN	MAX	UNIT
High-Speed Mode						
8	$t_{su(SOMI)M}$	Setup time, SPISOMI valid before SPICLK	Even, Odd	1		ns
9	$t_{h(SOMI)M}$	Hold time, SPISOMI valid after SPICLK	Even, Odd	6.5		ns
Normal Mode						
8	$t_{su(SOMI)M}$	Setup time, SPISOMI valid before SPICLK	Even, Odd	15		ns
9	$t_{h(SOMI)M}$	Hold time, SPISOMI valid after SPICLK	Even, Odd	0		ns

(1) The (BRR + 1) condition is Even when (SPIBRR + 1) is even or SPIBRR is 0 or 2. It is Odd when (SPIBRR + 1) is odd and SPIBRR is greater than 3.

Copyright © 2022 Texas Instruments Incorporated

6.15.6.1.2 SPI Master Mode Switching Characteristics (Clock Phase = 0)

over recommended operating conditions (unless otherwise noted)

NO.	PARAMETER(1) (2)		(BRR + 1)(3)	MIN	MAX	UNIT
General						
1	$t_{c(SPC)M}$	Cycle time, SPICLK	Even	$4t_{c(LSPCLK)}$	$128t_{c(LSPCLK)}$	ns
			Odd	$5t_{c(LSPCLK)}$	$127t_{c(LSPCLK)}$	
2	$t_{w(SPC1)M}$	Pulse duration, SPICLK, first pulse	Even	$0.5t_{c(SPC)M} - 1$	$0.5t_{c(SPC)M} + 1$	ns
			Odd	$0.5t_{c(SPC)M} + 0.5t_{c(LSPCLK)} - 1$	$0.5t_{c(SPC)M} + 0.5t_{c(LSPCLK)} + 1$	
3	$t_{w(SPC2)M}$	Pulse duration, SPICLK, second pulse	Even	$0.5t_{c(SPC)M} - 1$	$0.5t_{c(SPC)M} + 1$	ns
			Odd	$0.5t_{c(SPC)M} - 0.5t_{c(LSPCLK)} - 1$	$0.5t_{c(SPC)M} - 0.5t_{c(LSPCLK)} + 1$	
23	$t_{d(SPC)M}$	Delay time, $\overline{SPISTE}$ active to SPICLK	Even	$1.5t_{c(SPC)M} - 3t_{c(SYSCLK)} - 3$	$1.5t_{c(SPC)M} - 3t_{c(SYSCLK)} + 3$	ns
			Odd	$1.5t_{c(SPC)M} - 4t_{c(SYSCLK)} - 3$	$1.5t_{c(SPC)M} - 4t_{c(SYSCLK)} + 3$	
24	$t_{v(STE)M}$	Valid time, SPICLK to $\overline{SPISTE}$ inactive	Even	$0.5t_{c(SPC)M} - 3$	$0.5t_{c(SPC)M} + 3$	ns
			Odd	$0.5t_{c(SPC)M} - 0.5t_{c(LSPCLK)} - 3$	$0.5t_{c(SPC)M} - 0.5t_{c(LSPCLK)} + 3$	
High-Speed Mode						
4	$t_{d(SIMO)M}$	Delay time, SPICLK to SPISIMO valid	Even, Odd		1	ns
5	$t_{v(SIMO)M}$	Valid time, SPISIMO valid after SPICLK	Even	$0.5t_{c(SPC)M} - 3$		ns
			Odd	$0.5t_{c(SPC)M} - 0.5t_{c(LSPCLK)} - 3$		
Normal Mode						
4	$t_{d(SIMO)M}$	Delay time, SPICLK to SPISIMO valid	Even, Odd		2	ns
5	$t_{v(SIMO)M}$	Valid time, SPISIMO valid after SPICLK	Even	$0.5t_{c(SPC)M} - 3$		ns
			Odd	0.5tc(SPC)M – 0.5tc(LSPCLK) – 3		

(1) 10-pF load on pin for High-Speed Mode.
(2) 20-pF load on pin for Normal Mode.
(3) The (BRR + 1) condition is Even when (SPIBRR + 1) is even or SPIBRR is 0 or 2. It is Odd when (SPIBRR + 1) is odd and SPIBRR is greater than 3.

Copyright © 2022 Texas Instruments Incorporated

6.15.6.1.3 SPI Master Mode Switching Characteristics (Clock Phase = 1)

over recommended operating conditions (unless otherwise noted)

NO.	PARAMETER(1) (2)		(BRR + 1)	MIN	MAX	UNIT
General						
1	$t_{c(SPC)M}$	Cycle time, SPICLK	Even	$4t_{c(LSPCLK)}$	$128t_{c(LSPCLK)}$	ns
			Odd	$5t_{c(LSPCLK)}$	$127t_{c(LSPCLK)}$	
2	$t_{w(SPCH)M}$	Pulse duration, SPICLK, first pulse	Even	$0.5t_{c(SPC)M} - 1$	$0.5t_{c(SPC)M} + 1$	ns
			Odd	$0.5t_{c(SPC)M} - 0.5t_{c(LSPCLK)} - 1$	$0.5t_{c(SPC)M} - 0.5t_{c(LSPCLK)} + 1$	
3	$t_{w(SPC2)M}$	Pulse duration, SPICLK, second pulse	Even	$0.5t_{c(SPC)M} - 1$	$0.5t_{c(SPC)M} + 1$	ns
			Odd	$0.5t_{c(SPC)M} + 0.5t_{c(LSPCLK)} - 1$	$0.5t_{c(SPC)M} + 0.5t_{c(LSPCLK)} + 1$	
23	$t_{d(SPC)M}$	Delay time, $\overline{SPISTE}$ valid to SPICLK	Even, Odd	$2t_{c(SPC)M} - 3t_{c(SYSCLK)} - 3$	$2t_{c(SPC)M} - 3t_{c(SYSCLK)} + 3$	ns
24	$t_{d(STE)M}$	Delay time, SPICLK to $\overline{SPISTE}$ invalid	Even	–3	3	ns
			Odd	–3	3	
High-Speed Mode						
4	$t_{d(SIMO)M}$	Delay time, SPISIMO valid to SPICLK	Even	$0.5t_{c(SPC)M} - 2$		ns
			Odd	$0.5t_{c(SPC)M} + 0.5t_{c(LSPCLK)} - 2$		
5	$t_{v(SIMO)M}$	Valid time, SPISIMO valid after SPICLK	Even	$0.5t_{c(SPC)M} - 3$		ns
			Odd	$0.5t_{c(SPC)M} - 0.5t_{c(LSPCLK)} - 3$		
Normal Mode						
4	$t_{d(SIMO)M}$	Delay time, SPISIMO valid to SPICLK	Even	$0.5t_{c(SPC)M} - 2$		ns
			Odd	$0.5t_{c(SPC)M} + 0.5t_{c(LSPCLK)} - 2$		
5	$t_{v(SIMO)M}$	Valid time, SPISIMO valid after SPICLK	Even	$0.5t_{c(SPC)M} - 3$		ns
			Odd	$0.5t_{c(SPC)M} - 0.5t_{c(LSPCLK)} - 3$		

(1) 10-pF load on pin for High-Speed Mode.
(2) 20-pF load on pin for Normal Mode.

Copyright © 2022 Texas Instruments Incorporated

6.15.6.1.4 SPI Master Mode Timing Diagrams

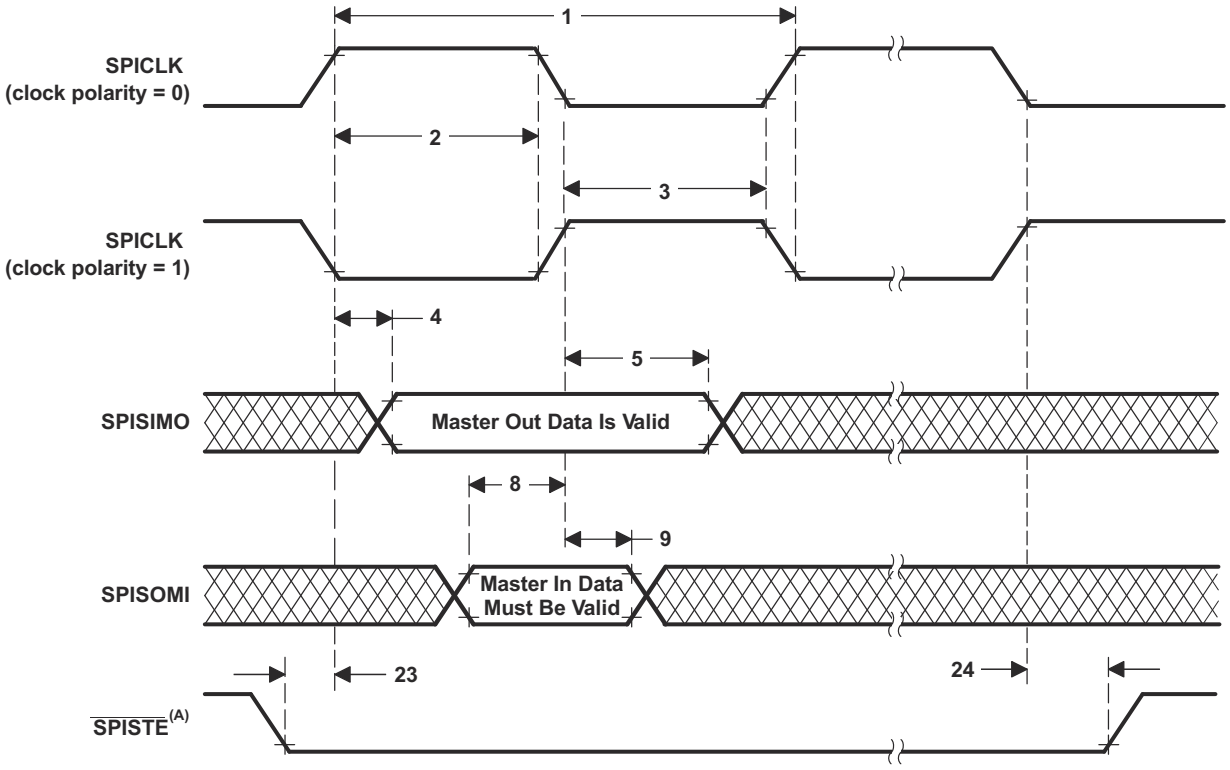

A. On the trailing end of the word, SPISTE will go inactive except between back-to-back transmit words in both FIFO and non-FIFO modes.

Figure 6-66. SPI Master Mode External Timing (Clock Phase = 0)

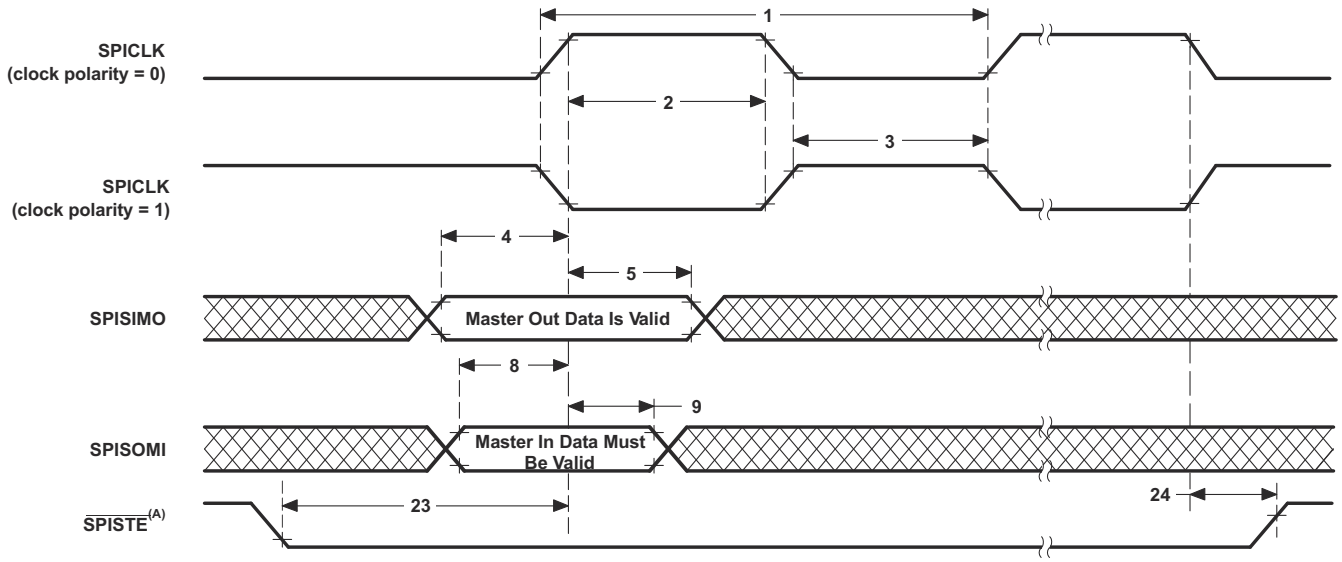

A. On the trailing end of the word, SPISTE will go inactive except between back-to-back transmit words in both FIFO and non-FIFO modes.

Figure 6-67. SPI Master Mode External Timing (Clock Phase = 1)

6.15.6.2 SPI Slave Mode Timings

The following section contains the SPI Slave Mode Timings. For more information about the SPI in High-Speed mode, see the Serial Peripheral Interface (SPI) chapter of the *TMS320F28003x Real-Time Microcontrollers Technical Reference Manual*.

6.15.6.2.1 SPI Slave Mode Timing Requirements

NO.			MIN	MAX	UNIT
12	$t_{c(SPC)S}$	Cycle time, SPICLK	$4t_{c(SYSCLK)}$		ns
13	$t_{w(SPC1)S}$	Pulse duration, SPICLK, first pulse	$2t_{c(SYSCLK)} – 1$		ns
14	$t_{w(SPC2)S}$	Pulse duration, SPICLK, second pulse	$2t_{c(SYSCLK)} – 1$		ns
19	$t_{su(SIMO)S}$	Setup time, SPISIMO valid before SPICLK	$1.5t_{c(SYSCLK)}$		ns
20	$t_{h(SIMO)S}$	Hold time, SPISIMO valid after SPICLK	$1.5t_{c(SYSCLK)}$		ns
25	$t_{su(STE)S}$	Setup time, $\overline{\text{SPISTE}}$ valid before SPICLK (Clock Phase = 0)	$2t_{c(SYSCLK)} + 15$		ns
		Setup time, $\overline{\text{SPISTE}}$ valid before SPICLK (Clock Phase = 1)	$2t_{c(SYSCLK)} + 15$		ns
26	$t_{h(STE)S}$	Hold time, $\overline{\text{SPISTE}}$ invalid after SPICLK	$1.5t_{c(SYSCLK)}$		ns

6.15.6.2.2 SPI Slave Mode Switching Characteristics

over recommended operating conditions (unless otherwise noted)

NO.	PARAMETER(1)		MIN	MAX	UNIT
15	$t_{d(SOMI)S}$	Delay time, SPICLK to SPISOMI valid		12	ns
16	$t_{v(SOMI)S}$	Valid time, SPISOMI valid after SPICLK	0		ns

(1) 20-pF load on pin.

Copyright © 2022 Texas Instruments Incorporated

6.15.6.2.3 SPI Slave Mode Timing Diagrams

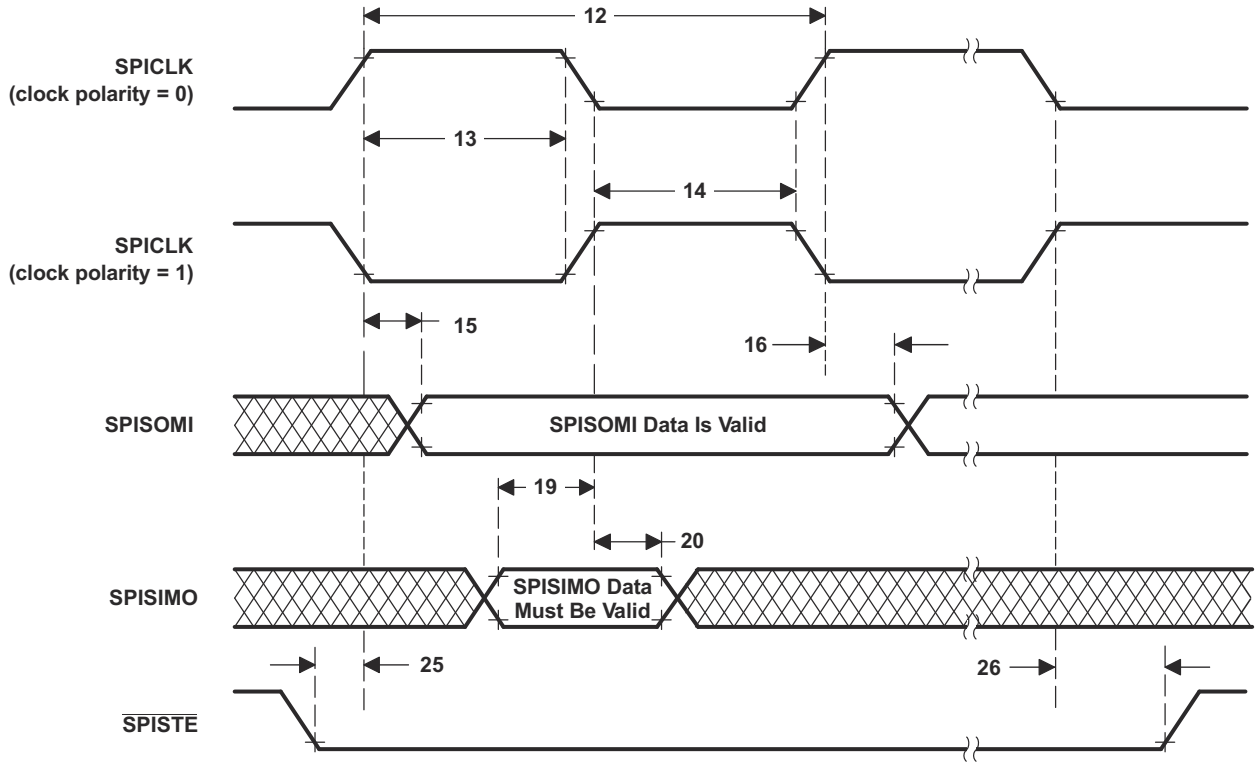

Figure 6-68. SPI Slave Mode External Timing (Clock Phase = 0)

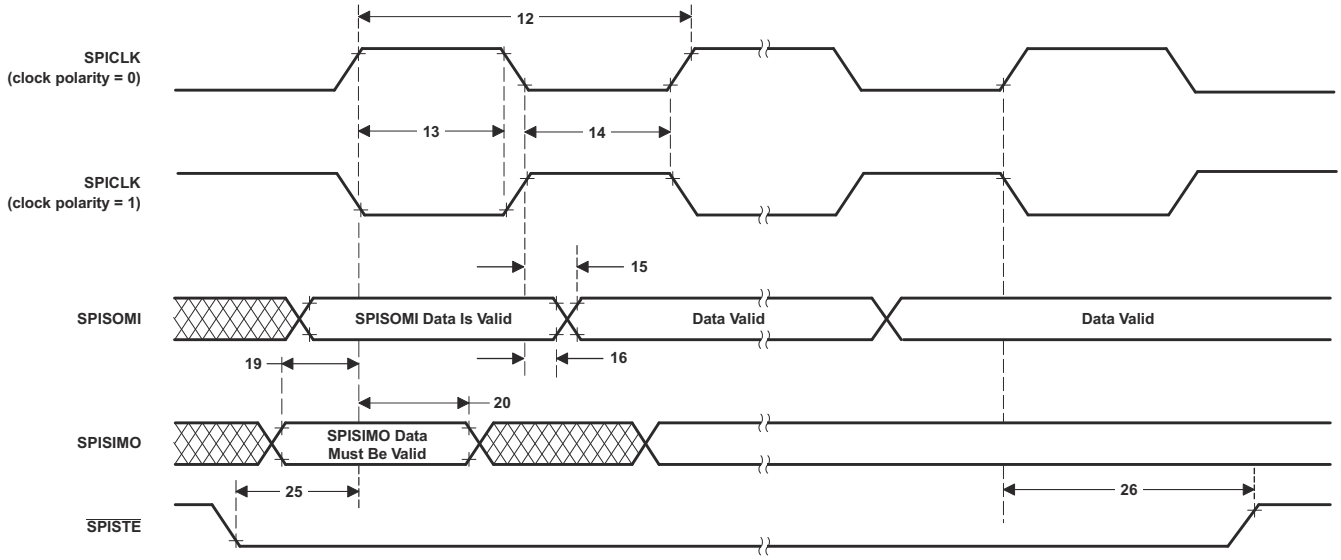

Figure 6-69. SPI Slave Mode External Timing (Clock Phase = 1)

Copyright © 2022 Texas Instruments Incorporated

6.15.7 Local Interconnect Network (LIN)

This device contains one Local Interconnect Network (LIN) module. The LIN module adheres to the LIN 2.1 standard as defined by the *LIN Specification Package Revision 2.1*. The LIN is a low-cost serial interface designed for applications where the CAN protocol may be too expensive to implement, such as small subnetworks for cabin comfort functions like interior lighting or window control in an automotive application.

The LIN standard is based on the SCI (UART) serial data link format. The communication concept is single-master and multiple-slave with a message identification for multicast transmission between any network nodes.

The LIN module can be programmed to work either as an SCI or as a LIN as the core of the module is an SCI. The hardware features of the SCI are augmented to achieve LIN compatibility. The SCI module is a universal asynchronous receiver-transmitter (UART) that implements the standard non-return-to-zero format.

Though the registers are common for LIN and SCI, the register descriptions have notes to identify the register/bit usage in different modes. Because of this, code written for this module cannot be directly ported to the stand-alone SCI module and vice versa.

The LIN module has the following features:

- Compatibility with LIN 1.3, 2.0 and 2.1 protocols
- Configurable baud rate up to 20 kbps (as per LIN 2.1 protocol)
- Two external pins: LINRX and LINTX
- Multibuffered receive and transmit units
- Identification masks for message filtering
- Automatic master header generation
  - Programmable synchronization break field
  - Synchronization field
  - Identifier field
- Slave automatic synchronization
  - Synchronization break detection
  - Optional baud rate update
  - Synchronization validation
- 2^{31} programmable transmission rates with 7 fractional bits
- Wakeup on LINRX dominant level from transceiver
- Automatic wakeup support
  - Wakeup signal generation
  - Expiration times on wakeup signals
- Automatic bus idle detection
- Error detection
  - Bit error
  - Bus error
  - No-response error
  - Checksum error
  - Synchronization field error
  - Parity error
- Capability to use direct memory access (DMA) for transmit and receive data
- Two interrupt lines with priority encoding for:
  - Receive
  - Transmit
  - ID, error, and status
- Support for LIN 2.0 checksum
- Enhanced synchronizer finite state machine (FSM) support for frame processing
- Enhanced handling of extended frames
- Enhanced baud rate generator
- Update wakeup/go to sleep

Copyright © 2022 Texas Instruments Incorporated

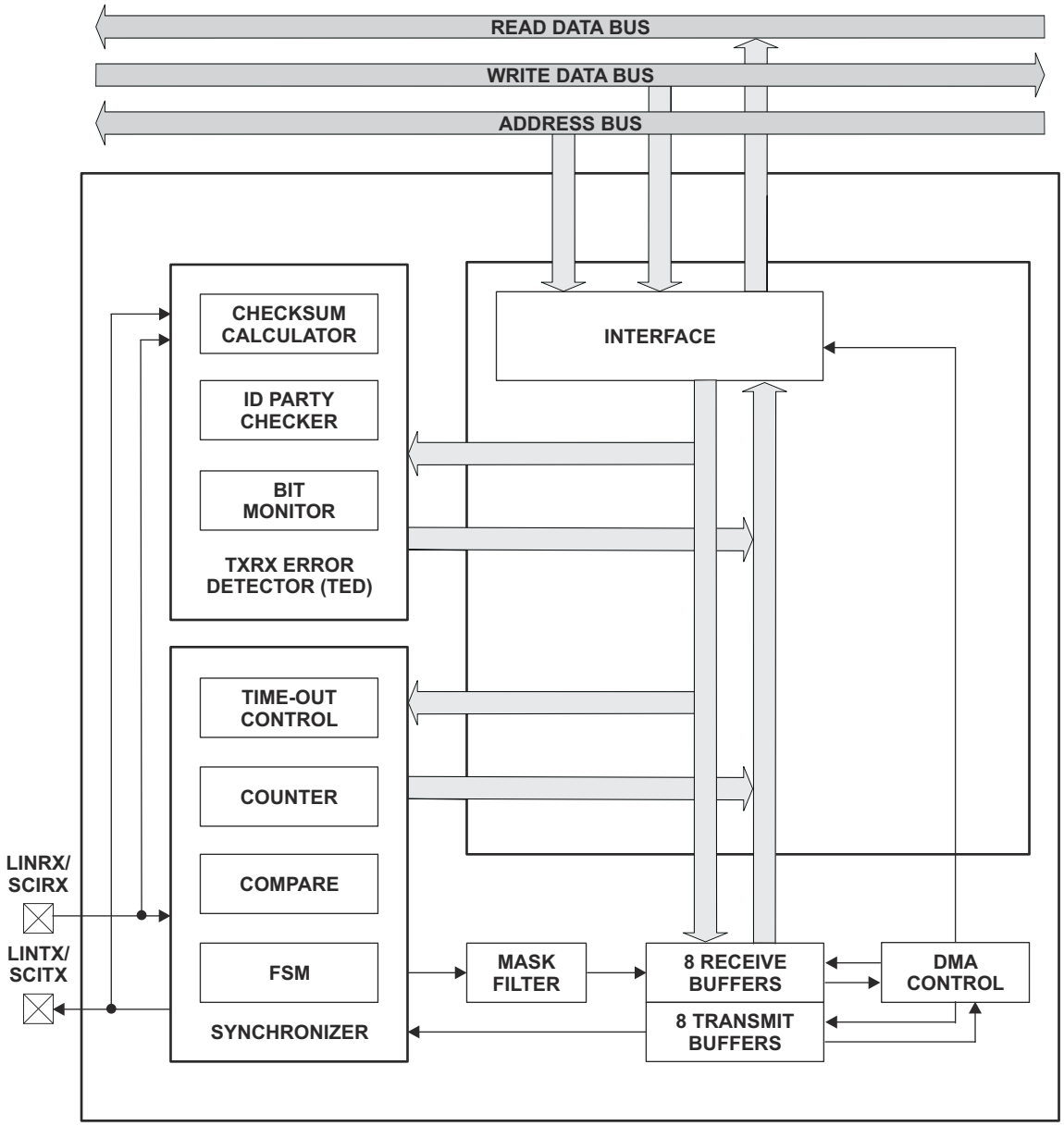

Figure 6-70. LIN Block Diagram

6.15.8 Fast Serial Interface (FSI)

The Fast Serial Interface (FSI) module is a serial communication peripheral capable of reliable and robust high-speed communications. The FSI is designed to ensure data robustness across many system conditions such as chip-to-chip as well as board-to-board across an isolation barrier. Payload integrity checks such as CRC, start- and end-of-frame patterns, and user-defined tags, are encoded before transmit and then verified after receipt without additional CPU interaction. Line breaks can be detected using periodic transmissions, all managed and monitored by hardware. The FSI is also tightly integrated with other control peripherals on the device. To ensure that the latest sensor data or control parameters are available, frames can be transmitted on every control loop period. An integrated skew-compensation block has been added on the receiver to handle skew that may occur between the clock and data signals due to a variety of factors, including trace-length mismatch and skews induced by an isolation chip. With embedded data robustness checks, data-link integrity checks, skew compensation, and integration with control peripherals, the FSI can enable high-speed, robust communication in any system. These and many other features of the FSI follow.

The FSI module includes the following features:

- Independent transmitter and receiver cores
- Source-synchronous transmission
- Dual data rate (DDR)
- One or two data lines
- Programmable data length
- Skew adjustment block to compensate for board and system delay mismatches
- Frame error detection
- Programmable frame tagging for message filtering
- Hardware ping to detect line breaks during communication (ping watchdog)
- Two interrupts per FSI core
- Externally triggered frame generation
- Hardware- or software-calculated CRC
- Embedded ECC computation module
- Register write protection
- DMA support
- SPI compatibility mode (limited features available)

Operating the FSI at maximum speed (60 MHz) at dual data rate (120 Mbps) may require the integrated skew compensation block to be configured according to the specific operating conditions on a case-by-case basis. The *Fast Serial Interface (FSI) Skew Compensation* Application Report provides example software on how to configure and set up the integrated skew compensation block on the Fast Serial Interface.

The FSI consists of independent transmitter (FSITX) and receiver (FSIRX) cores. The FSITX and FSIRX cores are configured and operated independently. The features available on the FSITX and FSIRX are described in the *FSI Transmitter* section and the *FSI Receiver* section, respectively.

Copyright © 2022 Texas Instruments Incorporated

6.15.8.1 FSI Transmitter

The FSI transmitter module handles the framing of data, CRC generation, signal generation of TXCLK, TXD0, and TXD1, as well as interrupt generation. The operation of the transmitter core is controlled and configured through programmable control registers. The transmitter control registers let the CPU program, control, and monitor the operation of the FSI transmitter. The transmit data buffer is accessible by the CPU and the DMA.

The transmitter has the following features:

- Automated ping frame generation
- Externally triggered ping frames
- Externally triggered data frames
- Software-configurable frame lengths
- 16-word data buffer
- Data buffer underrun and overrun detection
- Hardware-generated CRC on data bits
- Software ECC calculation on select data
- DMA support

Figure 6-71 shows the FSITX CPU interface. Figure 6-72 shows the high-level block diagram of the FSITX. Not all data paths and internal connections are shown. This diagram provides a high-level overview of the internal modules present in the FSITX.

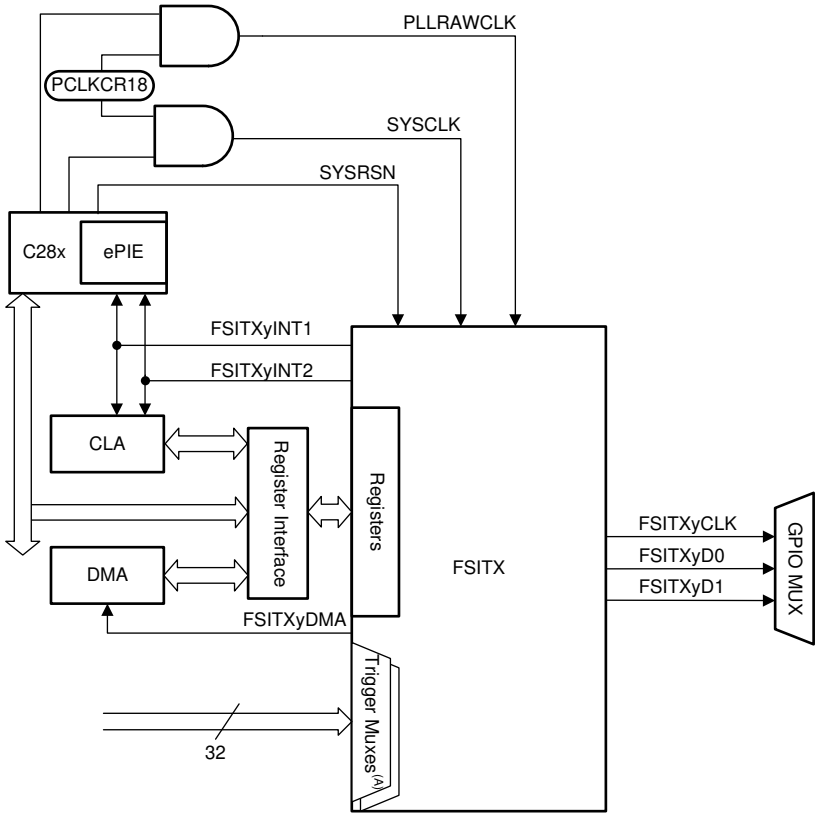

A. The signals connected to the trigger muxes are described in the External Frame Trigger Mux section of the Fast Serial Interface (FSI) chapter in the *TMS320F28003x Real-Time Microcontrollers Technical Reference Manual*.

Figure 6-71. FSITX CPU Interface

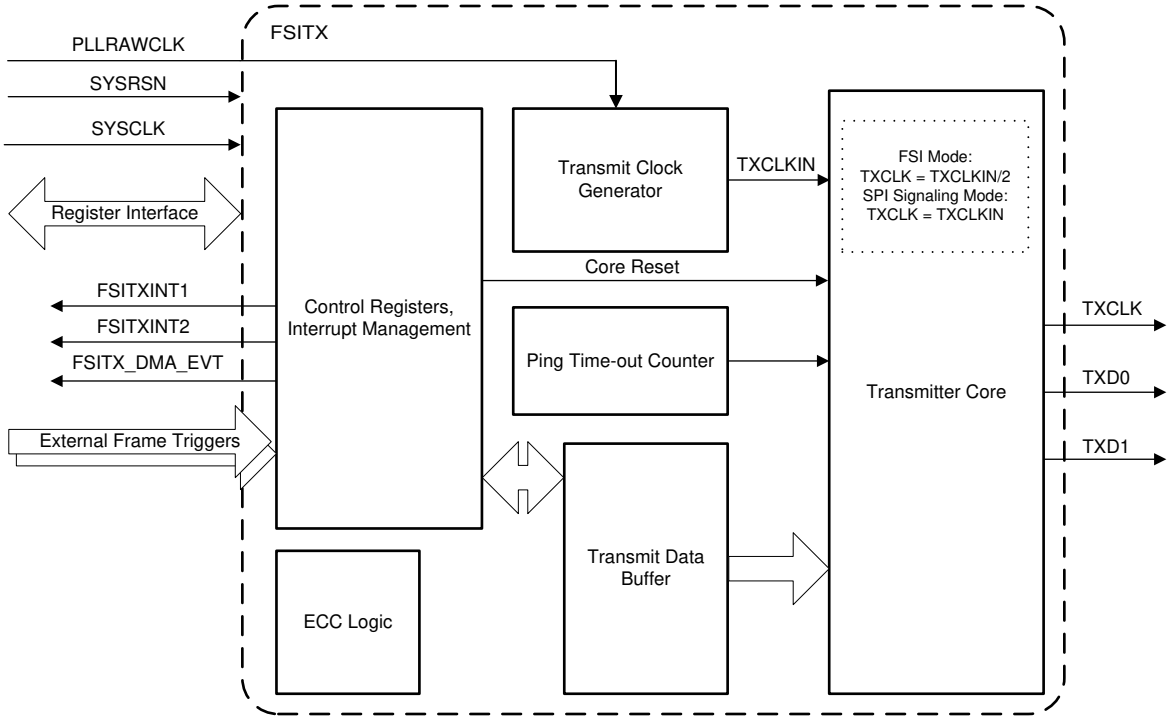

Figure 6-72. FSITX Block Diagram

6.15.8.1.1 FSITX Electrical Data and Timing

6.15.8.1.1.1 FSITX Switching Characteristics

over operating free-air temperature range (unless otherwise noted)

NO.	PARAMETER[1]		MIN	MAX	UNIT
1	$t_{c(TXCLK)}$	Cycle time, TXCLK	16.67		ns
2	$t_{w(TXCLK)}$	Pulse width, TXCLK low or TXCLK high	$(0.5t_{c(TXCLK)}) - 1$	$(0.5t_{c(TXCLK)}) + 1$	ns
3	$t_{d(TXCLK–TXD)}$	Delay time, TXCLK rising or falling toTXD valid	$(0.25t_{c(TXCLK)}) - 2$	$(0.25t_{c(TXCLK)}) + 2$	ns
4	$t_{d(TXCLK)}$	TXCLK delay compensation at TX_DLYLINE_CTRL[TXCLK_DLY]=31	9.95	30	ns
5	$t_{d(TXD0)}$	TXD0 delay compensation at TX_DLYLINE_CTRL[TXD0_DLY]=31	9.95	30	ns
6	$t_{d(TXD1)}$	TXD1 delay compensation at TX_DLYLINE_CTRL[TXD1_DLY]=31	9.95	30	ns
7	$t_{d(DELAY_ELEMENT)}$	Incremental delay of each delay line element for TXCLK, TXD0, and TXD1	0.3	1	ns
TDM1	$t_{skew(TDM_CLK-TDM_Dx)}$	Delay skew introduced between TXCLK-TDM_CLK delay and TXDx-TDM_Dx delays	-2.5	2.5	ns

(1) 10-pF load on pin.

Copyright © 2022 Texas Instruments Incorporated

6.15.8.1.1.2 FSITX Timings

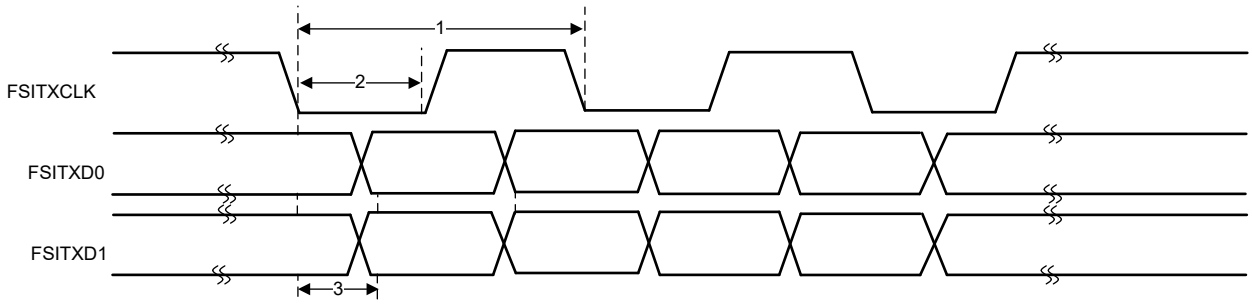

Figure 6-73. FSITX Timings

6.15.8.2 FSI Receiver

The receiver module interfaces to the FSI clock (RXCLK), and data lines (RXD0 and RXD1) after they pass through an optional programmable delay line. The receiver core handles the data framing, CRC computation, and frame-related error checking. The receiver bit clock and state machine are run by the RXCLK input, which is asynchronous to the device system clock.

The receiver control registers let the CPU program, control, and monitor the operation of the FSIRX. The receive data buffer is accessible by the CPU, HIC, and the DMA.

The receiver core has the following features:

- 16-word data buffer
- Multiple supported frame types
- Ping frame watchdog
- Frame watchdog
- CRC calculation and comparison in hardware
- ECC detection
- Programmable delay line control on incoming signals
- DMA support
- SPI compatibility mode

Figure 6-74 shows the FSIRX CPU interface. Figure 6-75 provides a high-level overview of the internal modules present in the FSIRX. Not all data paths and internal connections are shown.

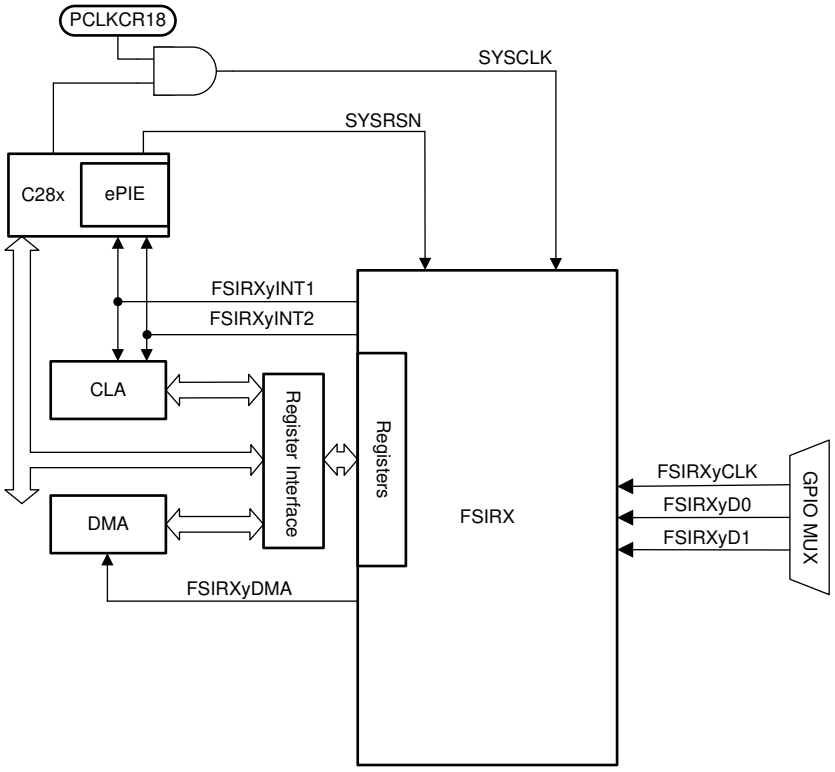

Figure 6-74. FSIRX CPU Interface

Copyright © 2022 Texas Instruments Incorporated

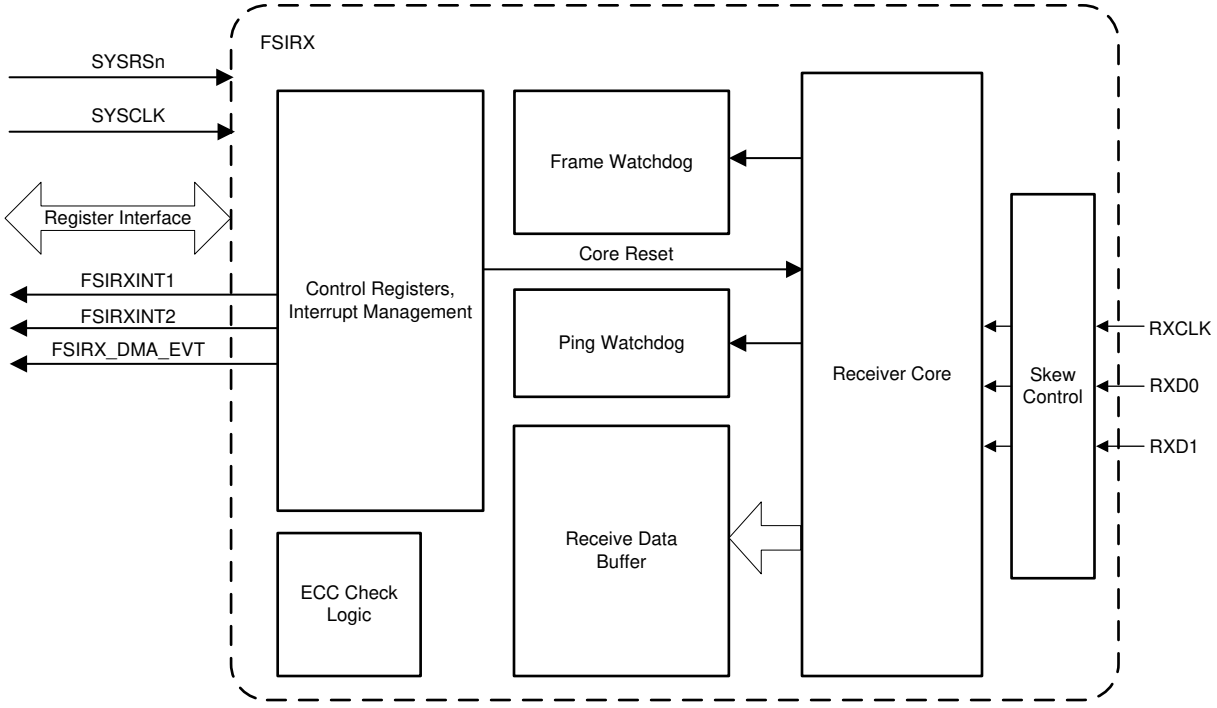

Figure 6-75. FSIRX Block Diagram

6.15.8.2.1 FSIRX Electrical Data and Timing

6.15.8.2.1.1 FSIRX Timing Requirements

NO.			MIN	MAX	UNIT
1	$t_{c(RXCLK)}$	Cycle time, RXCLK	16.67		ns
2	$t_{w(RXCLK)}$	Pulse width, RXCLK low or RXCLK high.	$0.35t_{c(RXCLK)}$	$0.65t_{c(RXCLK)}$	ns
3	$t_{su(RXCLK–RXD)}$	Setup time with respect to RXCLK, applies to both edges of the clock	1.7		ns
4	$t_{h(RXCLK–RXD)}$	Hold time with respect to RXCLK, applies to both edges of the clock	2		ns

6.15.8.2.1.2 FSIRX Switching Characteristics

NO.	PARAMETER(1)		MIN	MAX	UNIT
1	$t_{d(RXCLK)}$	RXCLK delay compensation at RX_DLYLINE_CTRL[RXCLK_DLY]=31	10	30	ns
2	$t_{d(RXD0)}$	RXD0 delay compensation at RX_DLYLINE_CTRL[RXD0_DLY]=31	10	30	ns
3	$t_{d(RXD1)}$	RXD1 delay compensation at RX_DLYLINE_CTRL[RXD1_DLY]=31	10	30	ns
4	$t_{d(DELAY_ELEMENT)}$	Incremental delay of each delay line element for RXCLK, RXD0, and RXD1	0.3	1	ns
TDM1	$t_{skew(TDM_CLK-TDM_Dx)}$	Delay skew introduced between RXCLK-TDM_CLK delay and RXDx-TDM_Dx delays	-3	3	ns

(1) 10-pF load on pin.

Copyright © 2022 Texas Instruments Incorporated

6.15.8.2.1.3 FSIRX Timings

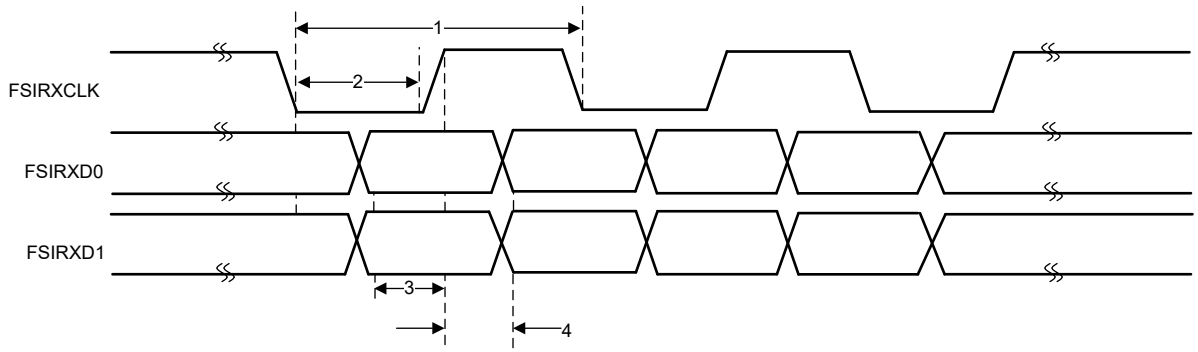

Figure 6-76. FSIRX Timings

Copyright © 2022 Texas Instruments Incorporated

6.15.8.3 FSI SPI Compatibility Mode

The FSI supports a SPI compatibility mode to enable communication with programmable SPI devices. In this mode, the FSI transmits its data in the same manner as a SPI in a single clock configuration mode. While the FSI is able to physically interface with a SPI in this mode, the external device must be able to encode and decode an FSI frame to communicate successfully. This is because the FSI transmits all SPI frame phases with the exception of the preamble and postamble. The FSI provides the same data validation and frame checking as if it was in standard FSI mode, allowing for more robust communication without consuming CPU cycles. The external SPI is required to send all relevant information and can access standard FSI features such as the ping frame watchdog on the FSIRX, frame tagging, or custom CRC values. The list of features of SPI compatibility mode follows:

- Data will transmit on rising edge and receive on falling edge of the clock.
- Only 16-bit word size is supported.
- TXD1 will be driven like an active-low chip-select signal. The signal will be low for the duration of the full frame transmission.
- No receiver chip-select input is required. RXD1 is not used. Data is shifted into the receiver on every active clock edge.
- No preamble or postamble clocks will be transmitted. All signals return to the idle state after the frame phase is finished.
- It is not possible to transmit in the SPI slave configuration because the FSI TXCLK cannot take an external clock source.

6.15.8.3.1 FSITX SPI Signaling Mode Electrical Data and Timing

Special timings are not required for the FSIRX in SPI signaling mode. FSIRX timings listed in the FSIRX Timing Requirements table are applicable in SPI compatibility mode. Setup and Hold times are only valid on the falling edge of FSIRXCLK because this is the active edge in SPI signaling mode.

6.15.8.3.1.1 FSITX SPI Signaling Mode Switching Characteristics

over operating free-air temperature range (unless otherwise noted)

NO.	PARAMETER[1]		MIN	MAX	UNIT
1	$t_{c(TXCLK)}$	Cycle time, TXCLK	16.67		ns
2	$t_{w(TXCLK)}$	Pulse width, TXCLK low or TXCLK high	$(0.5t_{c(TXCLK)}) – 1$	$(0.5t_{c(TXCLK)}) + 1$	ns
3	$t_{d(TXCLKH–TXD0)}$	Delay time, TXD0 valid after TXCLK high		3	ns
4	$t_{d(TXD1-TXCLK)}$	Delay time, TXCLK high after TXD1 low	$t_{w(TXCLK)} – 3$		ns
5	$t_{d(TXCLK-TXD1)}$	Delay time, TXD1 high after TXCLK low	$t_{w(TXCLK)}$		ns

(1) 10-pF load on pin

6.15.8.3.1.2 FSITX SPI Signaling Mode Timings

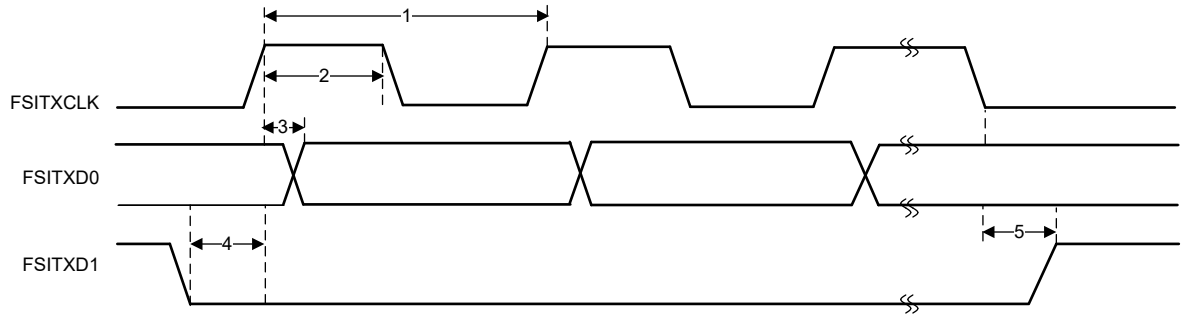

Figure 6-77. FSITX SPI Signaling Mode Timings

6.15.9 Host Interface Controller (HIC)

The HIC module allows an external host controller (master) to directly access resources of the device (slave) by emulating the ASRAM protocol. It has two modes of operation: direct access and mailbox access. In direct access mode, device resources is written to and read from directly by the external host. In mailbox access mode, external host and device write to and read from a buffer and notify each other when the buffer write/read is complete. For security reasons, the HIC has to be enabled by the device before the external host can access it.

Features of the HIC include:

- Configurable I/O data lines of 8 bits and 16 bits
- Direct and mailbox access modes
- 8 address lines and 8 configurable base addresses for a total of 2048 possible addressable regions
- Two 64-byte buffers for external host and device when using mailbox access mode
- Interrupt generation on buffer full/empty
- High throughput
- Trigger HIC activity from other peripherals
- Error indicators to the system or interface
- Commit feature that blocks writes to configuration registers

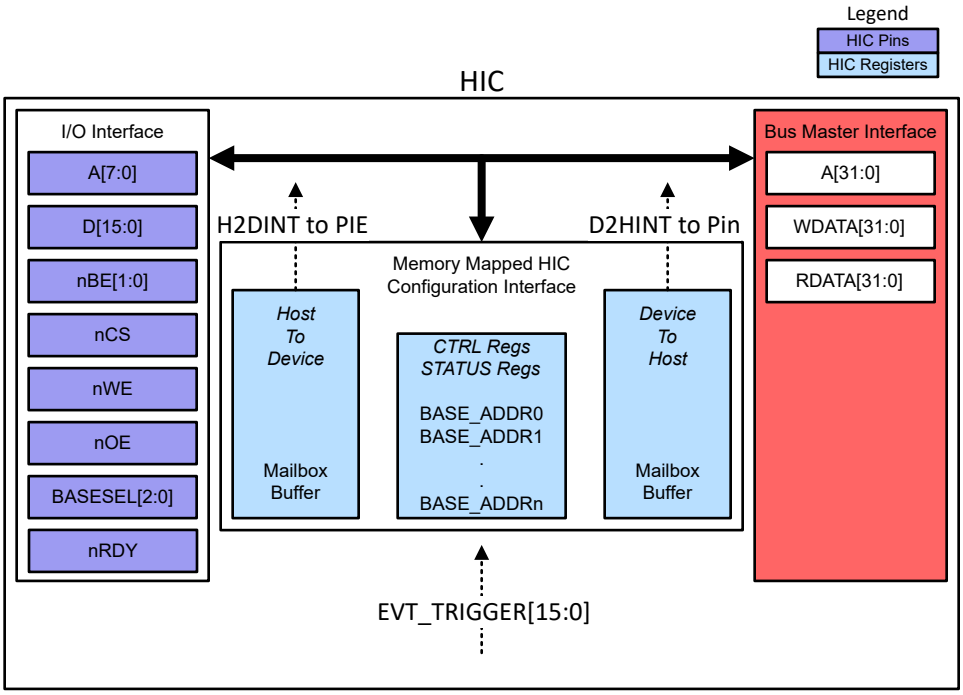

Figure 6-78. HIC Block Diagram

Copyright © 2022 Texas Instruments Incorporated

6.15.9.1 HIC Electrical Data and Timing

6.15.9.1.1 HIC Timing Requirements

over operating free-air temperature range (unless otherwise noted)

		MIN	MAX	UNIT
Read/Write Parameters with nOE and nWE pins - Dual Read/Write pins				
$t_{su(ABBV-OEV)}$	Setup time, A/BASESEL/nBE before nOE active	0		ns
$t_{su(ABBV-WEV)}$	Setup time, A/BASESEL/nBE before nWE active	0		ns
$t_{su(CSV-OEV)}$	Setup time, nCS active before nOE active	$0.5t_{c(SYSCLK)}$		ns
$t_{su(CSV-WEV)}$	Setup time, nCS active before nWE active	$0.5t_{c(SYSCLK)}$		ns
$t_{h(ABBV-OEIV)}$	Hold time, A/BASESEL/nBE/nCS after nOE inactive	6		ns
$t_{h(ABBV-WEIV)}$	Hold time, A/BASESEL/nBE/nCS after nWE inactive	6		ns
$t_{w(OEV)}$	Active pulse width of nOE (Read)(1)	$4t_{c(SYSCLK)}$		ns
$t_{w(WEV)}$	Active pulse width of nWE (Write)	$4t_{c(SYSCLK)}$		ns
$t_{w(CSIV)}$	Inactive pulse width of nCS(2)	$3t_{c(SYSCLK)}$		ns
$t_{w(OEIV)}$	Inactive Read pulse width of nOE(2)	$3t_{c(SYSCLK)}$		ns
$t_{w(WEIV)}$	Inactive Write pulse width of nWE(2)	$3t_{c(SYSCLK)}$		ns
$t_{su(DV-WEV)}$	Setup time, D before nWE active	0		ns
$t_{h(DV-WEIV)}$	Hold time, D after nWE inactive	6		ns
Read/Write Parameters with RnW pin - Single Read/Write pin				
$t_{su(ABBV-CSV)}$	Setup time, A/BASESEL/nBE before nCS active	0		ns
$t_{su(RNWV-CSV)}$	Setup time, RnW before nCS active	$0.5t_{c(SYSCLK)}$		ns
$t_{h(ABBV-CSIV)}$	Hold time, A/BASESEL/nBE/RnW after nCS inactive	5		ns
$t_{w(CSV_RD)}$	Active pulse width of nCS for read operation(1)	$4t_{c(SYSCLK)}$		ns
$t_{w(CSV_WR)}$	Active pulse width of nCS for write operation	$4t_{c(SYSCLK)}$		ns
$t_{w(CSIV)}$	Inactive pulse width of nCS(2)	$3t_{c(SYSCLK)}$		ns
$t_{w(RNWIV)}$	Inactive pulse width of RnW(2)	$3t_{c(SYSCLK)}$		ns
$t_{su(DV-CSV)}$	Setup time, D before nCS active	0		ns
$t_{h(DV-CSIV)}$	Hold time, D after nCS inactive	5		ns

(1) For accesses to the device region, additional 2 SYSCLK cycles are required.
(2) For accesses to the device region with nRDY pin, additional SYSCLK cycle is required.

6.15.9.1.2 HIC Switching Characteristics

over operating free-air temperature range (unless otherwise noted)

PARAMETER(1)		MIN	MAX	UNIT
Read/Write Parameters with nOE and nWE pins				
$t_{d(OEV-DV)}$	Output data delay time : nOE to D output valid (2)	$3t_{c(SYSCLK)}$	$4t_{c(SYSCLK)} + 15$	ns
$t_{d(OEIV-DIV)}$	Output data hold time : nOE invalid to D output invalid (tri-state)	$1t_{c(SYSCLK)}$	$2t_{c(SYSCLK)} + 15$	ns
$t_{d(OEV-RDYV)}$	Read Ready delay time : nOE to nRDY output valid	0	12	ns
$t_{d(WEV-RDYV)}$	Write Ready delay time : nWE to nRDY output valid	0	12	ns
$t_{d(RDYV-DV)}$	Ready to Data delay time : nRDY output valid to D output valid	-3	3	ns
$t_{w(RDYACT)}$	Active pulse width of nRDY output	$2t_{c(SYSCLK)}$		ns
Read/Write Parameters with RnW pin				
$t_{d(CSV-DV)}$	Output delay time : nCS active to D output valid (2)	$3t_{c(SYSCLK)}$	$4t_{c(SYSCLK)} + 14$	ns
$t_{d(CSIV-DIV)}$	Output hold time : nCS inactive to D output invalid (tri-state)	$1t_{c(SYSCLK)}$	$2t_{c(SYSCLK)} + 14$	ns
$t_{d(CSV-RDYV)}$	Output delay time : nCS to nRDY output valid	0	12	ns
$t_{d(RDYV-DV)}$	Ready to Data delay time : nRDY output valid to D output valid	-3	3	ns

Copyright © 2022 Texas Instruments Incorporated

6.15.9.1.2 HIC Switching Characteristics (continued)

over operating free-air temperature range (unless otherwise noted)

PARAMETER[1]		MIN	MAX	UNIT
$t_{w(RDYACT)}$	Active pulse width of nRDY output	$2t_{c(SYSCLK)}$		ns

(1) 10-pF load on pin.
(2) Applicable to mailbox accesses only. Direct memory map (Device) accesses are qualified with nRDY pin.

6.15.9.1.3 HIC Timing Diagrams

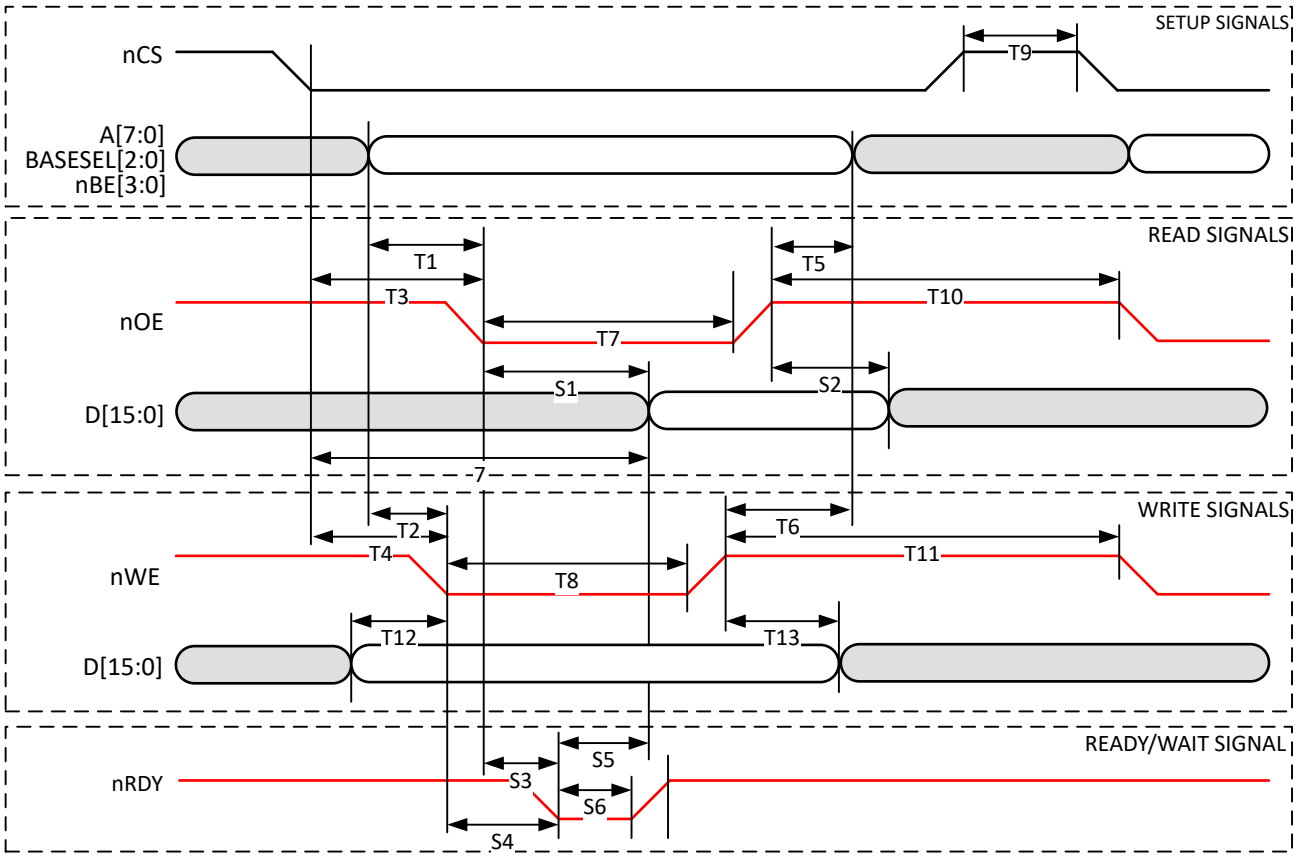

Figure 6-79. Read/Write Operation With nOE and nWE Pins

Copyright © 2022 Texas Instruments Incorporated

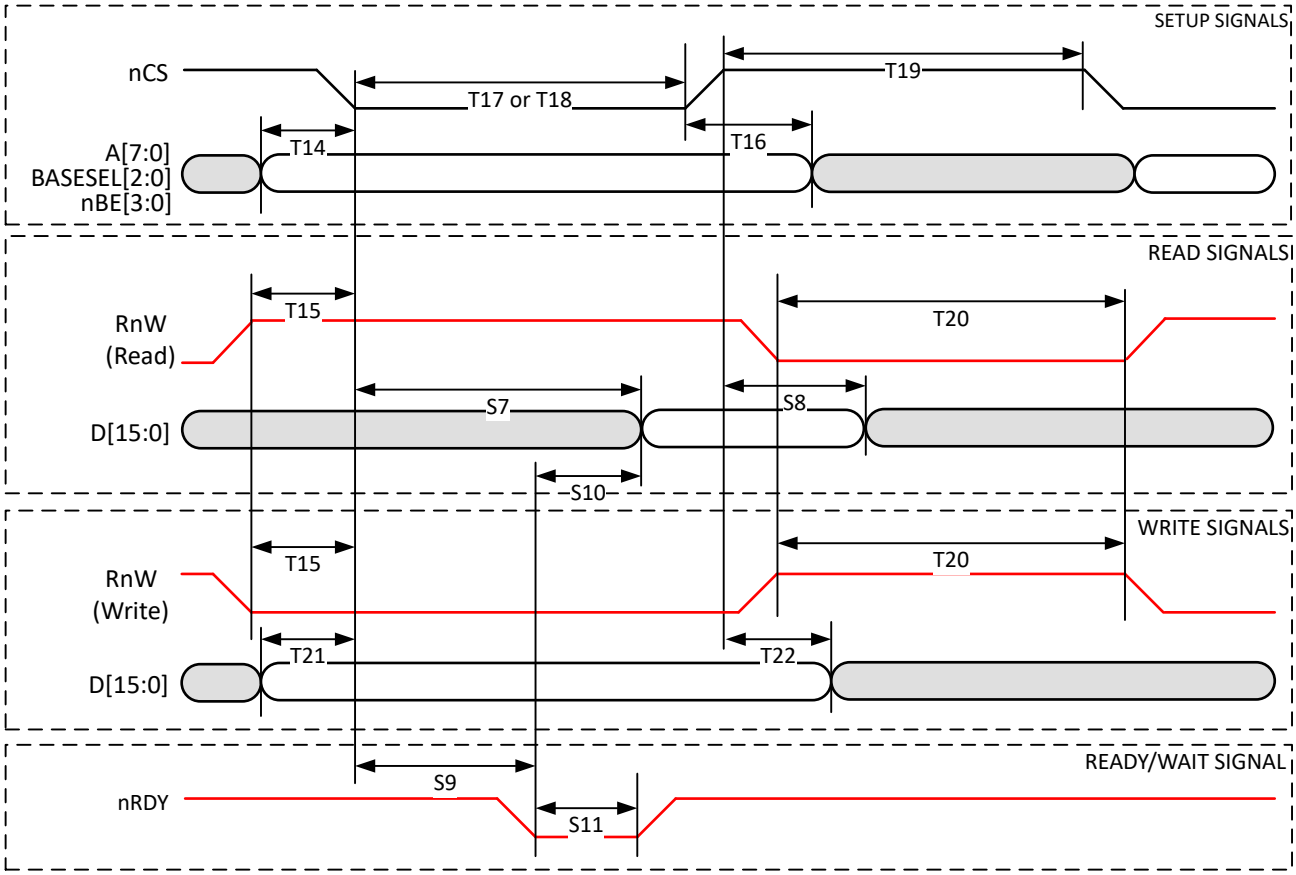

Figure 6-80. Read/Write Operation With RnW Pin

7 Detailed Description

7.1 Overview

C2000™ 32-bit Real-Time microcontrollers are optimized for processing, sensing, and actuation to improve closed-loop performance in real-time control applications such as industrial motor drives; solar inverters and digital power; electrical vehicles and transportation; motor control; and sensing and signal processing.

The TMS320F28003x (F28003x) is a powerful 32-bit floating-point microcontroller unit (MCU) that lets designers incorporate crucial control peripherals, differentiated analog, and nonvolatile memory on a single device.

The real-time control subsystem is based on TI's 32-bit C28x CPU, which provides 120 MHz of signal processing performance. The C28x CPU is further boosted by the FPU, new TMU extended instruction set, which enables fast execution of algorithms with trigonometric operations commonly found in transforms and torque loop calculations; and the VCRC extended instruction set, which reduces the latency for complex math operations commonly found in encoded applications.

The CLA allows significant offloading of common tasks from the main C28x CPU. The CLA is an independent 32-bit floating-point math accelerator that executes in parallel with the CPU. Additionally, the CLA has its own dedicated memory resources and it can directly access the key peripherals that are required in a typical control system. Support of a subset of ANSI C is standard, as are key features like hardware breakpoints and hardware task-switching.

The F28003x supports up to 384KB (192KW) of flash memory divided into three 128KB (64KW) banks, which enable programming and execution in parallel. Up to 69KB (34.5KW) of on-chip SRAM is also available to supplement the flash memory.

The Live Firmware Update hardware enhancements on F28003x allow fast context switching from the old firmware to the new firmware to minimize application downtime when updating the device firmware.

High-performance analog blocks are integrated on the F28003x real-time MCU to further enable system consolidation. Three separate 12-bit ADCs provide precise and efficient management of multiple analog signals, which ultimately boosts system throughput. Four analog comparator modules provide continuous monitoring of input voltage levels for trip conditions.

The TMS320C2000™ devices contain industry-leading control peripherals with frequency-independent ePWM/HRPWM and eCAP allow for a best-in-class level of control to the system.

Connectivity is supported through various industry-standard communication ports (such as SPI, SCI, I2C, PMBus, LIN, CAN and CAN FD) and offers multiple muxing options for optimal signal placement in a variety of applications. New to the C2000™ platform is Host Interface Controller (HIC), a high throughput interface that allows an external host to access resources of the TMS320F28003x. Additionally, in an industry first, the FSI enables high-speed, robust communication to complement the rich set of peripherals that are embedded in the device.

A specially enabled device variant, TMS320F28003xC, allows access to the Configurable Logic Block (CLB) for additional interfacing features. See Table 4-1 for more information.

The Embedded Real-Time Analysis and Diagnostic (ERAD) module enhances the debug and system analysis capabilities of the device by providing additional hardware breakpoints and counters for profiling.

To learn more about the C2000 real-time MCUs, visit the C2000™ real-time control MCUs page.

Copyright © 2022 Texas Instruments Incorporated

7.2 Functional Block Diagram

Figure 7-1 shows the CPU system and associated peripherals.

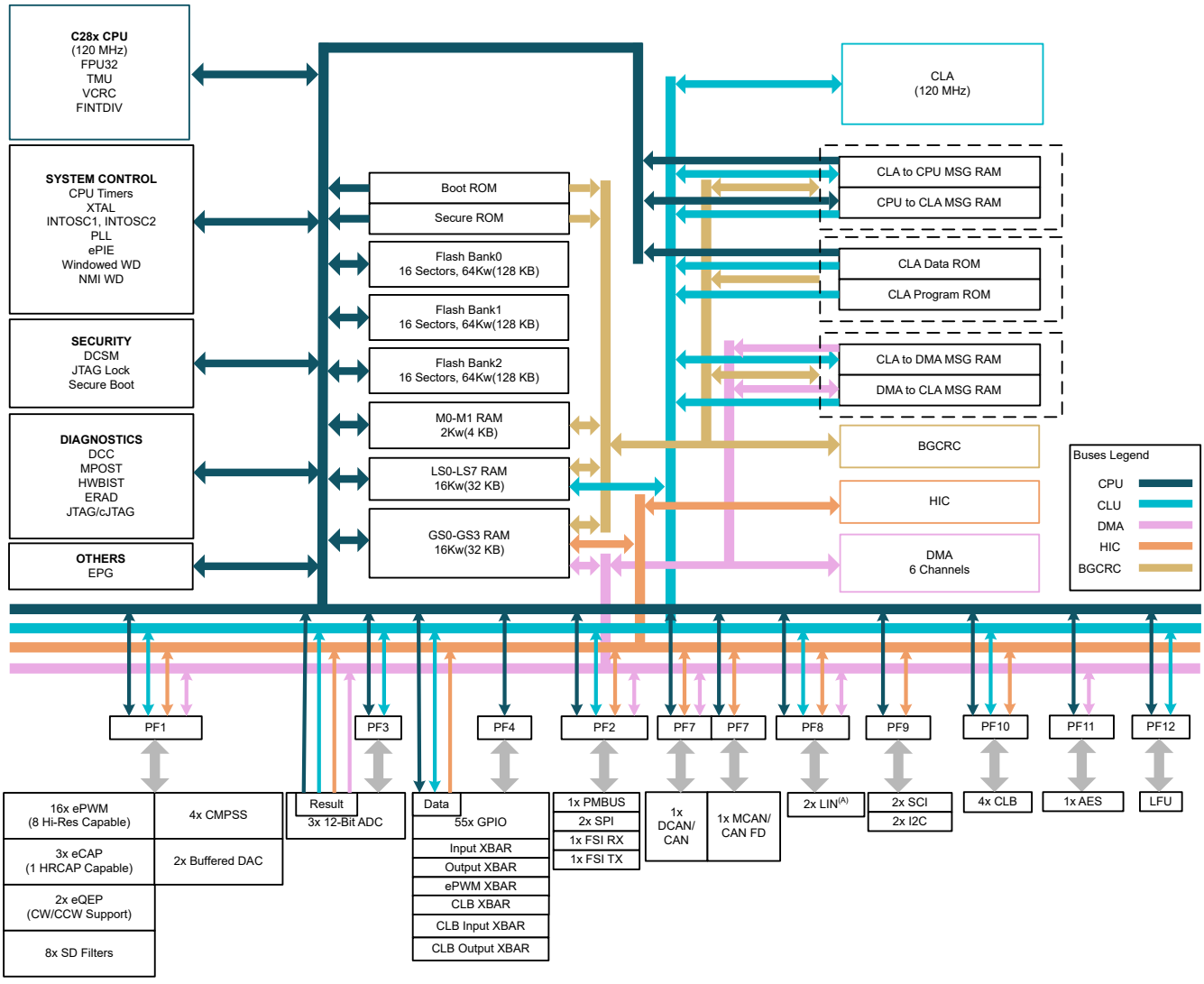

A. The LIN module can also work as an SCI.

Figure 7-1. Functional Block Diagram

7.3 Memory

7.3.1 Memory Map

The Memory Map table describes the memory map. See the Memory Controller Module section of the System Control chapter in the *TMS320F28003x Real-Time Microcontrollers Technical Reference Manual*.

Table 7-1. Memory Map

MEMORY	SIZE	START ADDRESS	END ADDRESS	HIC ACCESS	DMA ACCESS	CLA ACCESS	ECC/ PARITY	ACCESS PROTECTION	SECURITY
M0 RAM	1K x 16	0x0000 0000	0x0000 03FF	-	-	-	ECC	Yes	-
M1 RAM	1K x 16	0x0000 0400	0x0000 07FF	-	-	-	ECC	Yes	-
PieVectTable	512 x 16	0x0000 0D00	0x0000 0EFF	-	-	-	-	-	-
PieVectTable Swap	512 x 16	0x0100 0900	0x0100 0AFF	-	-	-	-	-	-
LS0 RAM	2K x 16	0x0000 8000	0x0000 87FF	-	-	Yes	ECC	Yes	Yes
LS1 RAM	2K x 16	0x0000 8800	0x0000 8FFF	-	-	Yes	ECC	Yes	Yes
LS2 RAM	2K x 16	0x0000 9000	0x0000 97FF	-	-	Yes	ECC	Yes	Yes
LS3 RAM	2K x 16	0x0000 9800	0x0000 9FFF	-	-	Yes	ECC	Yes	Yes
LS4 RAM	2K x 16	0x0000 A000	0x0000 A7FF	-	-	Yes	ECC	Yes	Yes
LS5 RAM	2K x 16	0x0000 A800	0x0000 AFFF	-	-	Yes	ECC	Yes	Yes
LS6 RAM	2K x 16	0x0000 B000	0x0000 B7FF	-	-	Yes	ECC	Yes	Yes
LS7 RAM	2K x 16	0x0000 B800	0x0000 BFFF	-	-	Yes	ECC	Yes	Yes
GS0 RAM	4K x 16	0x0000 C000	0x0000 CFFF	Yes	Yes	-	ECC	Yes	-
GS1 RAM	4K x 16	0x0000 D000	0x0000 DFFF	Yes	Yes	-	ECC	Yes	-
GS2 RAM	4K x 16	0x0000 E000	0x0000 EFFF	Yes	Yes	-	ECC	Yes	-
GS3 RAM	4K x 16	0x0000 F000	0x0000 FFFF	Yes	Yes	-	ECC	Yes	-
CAN A Message RAM	2K x 16	0x0004 9000	0x0004 97FF	Yes	Yes	-	Parity	-	-
MCAN Message RAM	8K x 16	0x0005 8000	0x0005 9FFF	Yes	-	-	Parity	-	-
CLA to CPU Message RAM	128 x 16	0x0000 1480	0x0000 14FF	-	-	Yes	ECC	-	-
CPU to CLA Message RAM	128 x 16	0x0000 1500	0x0000 157F	-	-	Yes	ECC	-	-
CLA to DMA Message RAM	128 x 16	0x0000 1680	0x0000 16FF	-	Yes	Yes	ECC	-	-
DMA to CLA Message RAM	128 x 16	0x0000 1700	0x0000 177F	-	Yes	Yes	ECC	-	-
TI OTP(1)	3K x 16	0x0007 0000	0x0007 0BFF	-	-	-	ECC	-	Yes(2)
User OTP	3K x 16	0x0007 8000	0x0007 8BFF	-	-	-	ECC	-	Yes(2)
Flash	192K x 16	0x0008 0000	0x000A FFFF	-	-	-	ECC	-	Yes
Secure ROM	24K x 16	0x003F 2000	0x003F 7FFF	-	-	-	Parity	-	Yes
Boot ROM	32K x 16	0x003F 8000	0x003F FFFF	-	-	-	Parity	-	-
Pie Vector Fetch Error (part of Boot ROM)	1 x 16	0x003F FFBE	0x003F FFBF	-	-	-	Parity	-	-
Default Vectors (part of Boot ROM)	64 x 16	0x003F FFC0	0x003F FFFF	-	-	-	Parity	-	-

(1) TI OTP is for TI internal use only.
(2) Only a subset is secure.

7.3.1.1 Dedicated RAM (Mx RAM)

The CPU subsystem has two dedicated ECC-capable RAM blocks: M0 and M1. These memories are small nonsecure blocks that are tightly coupled with the CPU (that is, only the CPU has access to them).

7.3.1.2 Local Shared RAM (LSx RAM)

Local shared RAMs (LSx RAMs) are accessible to the CPU, CLA, and BGCRC. All LSx RAM blocks have ECC. These memories are secure and have CPU access protection (CPU write/CPU fetch).

Copyright © 2022 Texas Instruments Incorporated

7.3.1.3 Global Shared RAM (GSx RAM)

Global shared RAMs (GSx RAMs) are accessible from the CPU, HIC, BGCRC and DMA. The CPU, HIC, and DMA have full read and write access to these memories. All GSx RAM blocks have ECC. The GSx RAMs have access protection (CPU write/CPU fetch/DMA write/HIC write).

7.3.1.4 Message RAM

There are two types of message RAMs on this device that can be used to share between CPU, CLA and DMA. CLA-CPU message RAM shares data between the CLA and CPU while the CLA-DMA message RAM shares data between the CLA and DMA.

7.3.2 Control Law Accelerator (CLA) Memory Map

Table 7-2 shows the CLA data ROM memory map. For information about the CLA program ROM, see the CLA Program ROM (CLAPROMCRC) chapter in the *TMS320F28003x Real-Time Microcontrollers Technical Reference Manual*.

Table 7-2. CLA Data ROM Memory Map

MEMORY	START ADDRESS	END ADDRESS	LENGTH
FFT Tables (Load)	0x0100 1070	0x0100 186F	0x0800
Data (Load)	0x0100 1870	0x0100 1FF9	0x078A
Version (Load)	0x0100 1FFA	0x0100 1FFF	0x0006
FFT Tables (Run)	0x0000 F070	0x0000 F86F	0x0800
Data (Run)	0x0000 F870	0x0000 FFF9	0x078A
Version (Run)	0x0000 FFFA	0x0000 FFFF	0x0006

Copyright © 2022 Texas Instruments Incorporated

7.3.3 Flash Memory Map

On the F28003x devices, three flash banks (384KB [192KW]) are available. Code to program the flash should be executed out of RAM, there should not be any kind of access to the flash bank when an erase or program operation is in progress. The Addresses of Flash Sectors table lists the addresses of flash sectors available for each part number.

7.3.3.1 Addresses of Flash Sectors

Table 7-3. Addresses of Flash Sectors

PART NUMBER	SECTOR	ADDRESS			ECC ADDRESS		
		SIZE	START	END	SIZE	START	END
OTP Sectors							
All F28003x	TI OTP Bank 0 (Unsecure)	1008 x 16	0x0007 0000	0x0007 03EF	126 x 16	0x0107 0000	0x0107 007D
	TI OTP Bank 0 (Secure)	16 x 16	0x0007 03F0	0x0007 03FF	2 x 16	0x0107 007E	0x0107 007F
	TI OTP Bank 1	1K x 16	0x0007 0400	0x0007 07FF	128 x 16	0x0107 0080	0x0107 00FF
F280039, F280038	TI OTP Bank 2	1K x 16	0x0007 0800	0x0007 0BFF	128 x 16	0x0107 0100	0x0107 017F
All F28003x	User configurable DCSM OTP Bank 0	1K x 16	0x0007 8000	0x0007 83FF	128 x 16	0x0107 1000	0x0107 107F
	User configurable OTP Bank 1	1K x 16	0x0007 8400	0x0007 87FF	128 x 16	0x0107 1080	0x0107 10FF
F280039, F280038	User configurable OTP Bank 2	1K x 16	0x0007 8800	0x0007 8BFF	128 x 16	0x0107 1100	0x0107 117F
Bank 0 Sectors							
F280039, F280038, F280037, F280036	Sector 0	4K x 16	0x0008 0000	0x0008 0FFF	512 x 16	0x0108 0000	0x0108 01FF
	Sector 1	4K x 16	0x0008 1000	0x0008 1FFF	512 x 16	0x0108 0200	0x0108 03FF
	Sector 2	4K x 16	0x0008 2000	0x0008 2FFF	512 x 16	0x0108 0400	0x0108 05FF
	Sector 3	4K x 16	0x0008 3000	0x0008 3FFF	512 x 16	0x0108 0600	0x0108 07FF
	Sector 4	4K x 16	0x0008 4000	0x0008 4FFF	512 x 16	0x0108 0800	0x0108 09FF
	Sector 5	4K x 16	0x0008 5000	0x0008 5FFF	512 x 16	0x0108 0A00	0x0108 0BFF
	Sector 6	4K x 16	0x0008 6000	0x0008 6FFF	512 x 16	0x0108 0C00	0x0108 0DFF
	Sector 7	4K x 16	0x0008 7000	0x0008 7FFF	512 x 16	0x0108 0E00	0x0108 0FFF
F280039, F280038, F280037, F280036, F280034, F280033	Sector 8	4K x 16	0x0008 8000	0x0008 8FFF	512 x 16	0x0108 1000	0x0108 11FF
	Sector 9	4K x 16	0x0008 9000	0x0008 9FFF	512 x 16	0x0108 1200	0x0108 13FF
	Sector 10	4K x 16	0x0008 A000	0x0008 AFFF	512 x 16	0x0108 1400	0x0108 15FF
	Sector 11	4K x 16	0x0008 B000	0x0008 BFFF	512 x 16	0x0108 1600	0x0108 17FF
	Sector 12	4K x 16	0x0008 C000	0x0008 CFFF	512 x 16	0x0108 1800	0x0108 19FF
	Sector 13	4K x 16	0x0008 D000	0x0008 DFFF	512 x 16	0x0108 1A00	0x0108 1BFF
	Sector 14	4K x 16	0x0008 E000	0x0008 EFFF	512 x 16	0x0108 1C00	0x0108 1DFF
	Sector 15	4K x 16	0x0008 F000	0x0008 FFFF	512 x 16	0x0108 1E00	0x0108 1FFF

Copyright © 2022 Texas Instruments Incorporated

Table 7-3. Addresses of Flash Sectors (continued)

PART NUMBER	SECTOR	ADDRESS			ECC ADDRESS		
		SIZE	START	END	SIZE	START	END
Bank 1 Sectors							
F280039, F280038, F280037, F280036, F280034, F280033	Sector 0	4K x 16	0x0009 0000	0x0009 0FFF	512 x 16	0x0108 2000	0x0108 21FF
	Sector 1	4K x 16	0x0009 1000	0x0009 1FFF	512 x 16	0x0108 2200	0x0108 23FF
	Sector 2	4K x 16	0x0009 2000	0x0009 2FFF	512 x 16	0x0108 2400	0x0108 25FF
	Sector 3	4K x 16	0x0009 3000	0x0009 3FFF	512 x 16	0x0108 2600	0x0108 27FF
	Sector 4	4K x 16	0x0009 4000	0x0009 4FFF	512 x 16	0x0108 2800	0x0108 29FF
	Sector 5	4K x 16	0x0009 5000	0x0009 5FFF	512 x 16	0x0108 2A00	0x0108 2BFF
	Sector 6	4K x 16	0x0009 6000	0x0009 6FFF	512 x 16	0x0108 2C00	0x0108 2DFF
	Sector 7	4K x 16	0x0009 7000	0x0009 7FFF	512 x 16	0x0108 2E00	0x0108 2FFF
F280039, F280038, F280037, F280036	Sector 8	4K x 16	0x0009 8000	0x0009 8FFF	512 x 16	0x0108 3000	0x0108 31FF
	Sector 9	4K x 16	0x0009 9000	0x0009 9FFF	512 x 16	0x0108 3200	0x0108 33FF
	Sector 10	4K x 16	0x0009 A000	0x0009 AFFF	512 x 16	0x0108 3400	0x0108 35FF
	Sector 11	4K x 16	0x0009 B000	0x0009 BFFF	512 x 16	0x0108 3600	0x0108 37FF
	Sector 12	4K x 16	0x0009 C000	0x0009 CFFF	512 x 16	0x0108 3800	0x0108 39FF
	Sector 13	4K x 16	0x0009 D000	0x0009 DFFF	512 x 16	0x0108 3A00	0x0108 3BFF
	Sector 14	4K x 16	0x0009 E000	0x0009 EFFF	512 x 16	0x0108 3C00	0x0108 3DFF
	Sector 15	4K x 16	0x0009 F000	0x0009 FFFF	512 x 16	0x0108 3E00	0x0108 3FFF
Bank 2 Sectors							
F280039, F280038	Sector 0	4K x 16	0x000A 0000	0x000A 0FFF	512 x 16	0x0108 4000	0x0108 41FF
	Sector 1	4K x 16	0x000A 1000	0x000A 1FFF	512 x 16	0x0108 4200	0x0108 43FF
	Sector 2	4K x 16	0x000A 2000	0x000A 2FFF	512 x 16	0x0108 4400	0x0108 45FF
	Sector 3	4K x 16	0x000A 3000	0x000A 3FFF	512 x 16	0x0108 4600	0x0108 47FF
	Sector 4	4K x 16	0x000A 4000	0x000A 4FFF	512 x 16	0x0108 4800	0x0108 49FF
	Sector 5	4K x 16	0x000A 5000	0x000A 5FFF	512 x 16	0x0108 4A00	0x0108 4BFF
	Sector 6	4K x 16	0x000A 6000	0x000A 6FFF	512 x 16	0x0108 4C00	0x0108 4DFF
	Sector 7	4K x 16	0x000A 7000	0x000A 7FFF	512 x 16	0x0108 4E00	0x0108 4FFF
	Sector 8	4K x 16	0x000A 8000	0x000A 8FFF	512 x 16	0x0108 5000	0x0108 51FF
	Sector 9	4K x 16	0x000A 9000	0x000A 9FFF	512 x 16	0x0108 5200	0x0108 53FF
	Sector 10	4K x 16	0x000A A000	0x000A AFFF	512 x 16	0x0108 5400	0x0108 55FF
	Sector 11	4K x 16	0x000A B000	0x000A BFFF	512 x 16	0x0108 5600	0x0108 57FF
	Sector 12	4K x 16	0x000A C000	0x000A CFFF	512 x 16	0x0108 5800	0x0108 59FF
	Sector 13	4K x 16	0x000A D000	0x000A DFFF	512 x 16	0x0108 5A00	0x0108 5BFF
	Sector 14	4K x 16	0x000A E000	0x000A EFFF	512 x 16	0x0108 5C00	0x0108 5DFF
	Sector 15	4K x 16	0x000A F000	0x000A FFFF	512 x 16	0x0108 5E00	0x0108 5FFF

Copyright © 2022 Texas Instruments Incorporated

7.3.4 Peripheral Registers Memory Map

The Peripheral Registers Memory Map (C28) table lists the peripheral registers.

Table 7-4. Peripheral Registers Memory Map (C28)

Bit Field Name		DriverLib Name	Base Address	CPU1	DMA	HIC	CLA	Pipeline Protected
Instance	Structure							
Peripheral Frame 0 (PF0)								
-	-	M0_RAM_BASE	0x0000_0000	YES	-	-	-	-
-	-	M1_RAM_BASE	0x0000_0400	YES	-	-	-	-
AdcaResultRegs	ADC_RESULT_REGS	ADCARESULT_BASE	0x0000_0B00	YES	YES	YES	YES	-
AdcbResultRegs	ADC_RESULT_REGS	ADCBRESULT_BASE	0x0000_0B20	YES	YES	YES	YES	-
AdccResultRegs	ADC_RESULT_REGS	ADCCRESULT_BASE	0x0000_0B40	YES	YES	YES	YES	-
CpuTimer0Regs	CPUTIMER_REGS	CPUTIMER0_BASE	0x0000_0C00	YES	-	-	-	-
Cla1OnlyRegs	CLA_ONLY_REGS	CLA1_ONLY_BASE	0x0000_0C00	-	-	-	YES	-
CpuTimer1Regs	CPUTIMER_REGS	CPUTIMER1_BASE	0x0000_0C08	YES	-	-	-	-
CpuTimer2Regs	CPUTIMER_REGS	CPUTIMER2_BASE	0x0000_0C10	YES	-	-	-	-
Cla1SoftIntRegs	CLA_SOFTINT_REGS	CLA1_SOFTINT_BASE	0x0000_0CE0	-	-	-	YES	-
PieCtrlRegs	PIE_CTRL_REGS	PIECTRL_BASE	0x0000_0CE0	YES	-	-	-	-
PieVectTable	PIE_VECT_TABLE	PIEVECTTABLE_BASE	0x0000_0D00	YES	-	-	-	-
DmaRegs	DMA_REGS	DMA_BASE	0x0000_1000	YES	-	-	-	-
Dmach1Regs	DMA_CH_REGS	DMA_CH1_BASE	0x0000_1020	YES	-	-	-	-
Dmach2Regs	DMA_CH_REGS	DMA_CH2_BASE	0x0000_1040	YES	-	-	-	-
Dmach3Regs	DMA_CH_REGS	DMA_CH3_BASE	0x0000_1060	YES	-	-	-	-
Dmach4Regs	DMA_CH_REGS	DMA_CH4_BASE	0x0000_1080	YES	-	-	-	-
Dmach5Regs	DMA_CH_REGS	DMA_CH5_BASE	0x0000_10A0	YES	-	-	-	-
Dmach6Regs	DMA_CH_REGS	DMA_CH6_BASE	0x0000_10C0	YES	-	-	-	-
Cla1Regs	CLA_REGS	CLA1_BASE	0x0000_1400	YES	-	-	-	-
-	-	LS0_RAM_BASE	0x0000_8000	YES	-	-	YES	-
-	-	LS1_RAM_BASE	0x0000_8800	YES	-	-	YES	-
-	-	LS2_RAM_BASE	0x0000_9000	YES	-	-	YES	-
-	-	LS3_RAM_BASE	0x0000_9800	YES	-	-	YES	-
-	-	LS4_RAM_BASE	0x0000_A000	YES	-	-	YES	-
-	-	LS5_RAM_BASE	0x0000_A800	YES	-	-	YES	-
-	-	LS6_RAM_BASE	0x0000_B000	YES	-	-	YES	-
-	-	LS7_RAM_BASE	0x0000_B800	YES	-	-	YES	-
-	-	GS0_RAM_BASE	0x0000_C000	YES	YES	YES	-	-
-	-	GS1_RAM_BASE	0x0000_D000	YES	YES	YES	-	-
-	-	GS2_RAM_BASE	0x0000_E000	YES	YES	YES	-	-
-	-	GS3_RAM_BASE	0x0000_F000	YES	YES	YES	-	-
UidRegs	UID_REGS	UID_BASE	0x0007_0200	YES	-	-	-	-
DcsmZ1OtpRegs	DCSM_Z1_OTP	DCSM_Z1OTP_BASE	0x0007_8000	YES	-	-	-	-
DcsmZ2OtpRegs	DCSM_Z2_OTP	DCSM_Z2OTP_BASE	0x0007_8200	YES	-	-	-	-
Peripheral Frame 1 (PF1)								
EPwm1Regs	EPWM_REGS	EPWM1_BASE	0x0000_4000	YES	YES	YES	YES	YES
EPwm2Regs	EPWM_REGS	EPWM2_BASE	0x0000_4100	YES	YES	YES	YES	YES
EPwm3Regs	EPWM_REGS	EPWM3_BASE	0x0000_4200	YES	YES	YES	YES	YES
EPwm4Regs	EPWM_REGS	EPWM4_BASE	0x0000_4300	YES	YES	YES	YES	YES
EPwm5Regs	EPWM_REGS	EPWM5_BASE	0x0000_4400	YES	YES	YES	YES	YES
EPwm6Regs	EPWM_REGS	EPWM6_BASE	0x0000_4500	YES	YES	YES	YES	YES
EPwm7Regs	EPWM_REGS	EPWM7_BASE	0x0000_4600	YES	YES	YES	YES	YES
EPwm8Regs	EPWM_REGS	EPWM8_BASE	0x0000_4700	YES	YES	YES	YES	YES
EQep1Regs	EQEP_REGS	EQEP1_BASE	0x0000_5100	YES	YES	YES	YES	YES
EQep2Regs	EQEP_REGS	EQEP2_BASE	0x0000_5140	YES	YES	YES	YES	YES
ECap1Regs	ECAP_REGS	ECAP1_BASE	0x0000_5200	YES	YES	YES	YES	YES
ECap2Regs	ECAP_REGS	ECAP2_BASE	0x0000_5240	YES	YES	YES	YES	YES
ECap3Regs	ECAP_REGS	ECAP3_BASE	0x0000_5280	YES	YES	YES	YES	YES
HRCap3Regs	HRCAP_REGS	HRCAP3_BASE	0x0000_52A0	YES	YES	YES	YES	YES

Copyright © 2022 Texas Instruments Incorporated

Table 7-4. Peripheral Registers Memory Map (C28) (continued)

Bit Field Name		DriverLib Name	Base Address	CPU1	DMA	HIC	CLA	Pipeline Protected
Instance	Structure							
DacaRegs	DAC_REGS	DACA_BASE	0x0000_5C00	YES	YES	YES	YES	YES
DacbRegs	DAC_REGS	DACB_BASE	0x0000_5C10	YES	YES	YES	YES	YES
Cmpss1Regs	CMPSS_REGS	CMPSS1_BASE	0x0000_5C80	YES	YES	YES	YES	YES
Cmpss2Regs	CMPSS_REGS	CMPSS2_BASE	0x0000_5CA0	YES	YES	YES	YES	YES
Cmpss3Regs	CMPSS_REGS	CMPSS3_BASE	0x0000_5CC0	YES	YES	YES	YES	YES
Cmpss4Regs	CMPSS_REGS	CMPSS4_BASE	0x0000_5CE0	YES	YES	YES	YES	YES
Sdfm1Regs	SDFM_REGS	SDFM1_BASE	0x0000_5E00	YES	YES	YES	YES	YES
Sdfm2Regs	SDFM_REGS	SDFM2_BASE	0x0000_5E80	YES	YES	YES	YES	YES
Peripheral Frame 2 (PF2)								
SpiaRegs	SPI_REGS	SPIA_BASE	0x0000_6100	YES	YES	YES	YES	YES
SpibRegs	SPI_REGS	SPIB_BASE	0x0000_6110	YES	YES	YES	YES	YES
BgcrcCpuRegs	BGCRC_REGS	BGCRC_CPU_BASE	0x0000_6340	YES	-	-	-	YES
BgcrcCla1Regs	BGCRC_REGS	BGCRC_CLA1_BASE	0x0000_6380	YES	-	-	YES	YES
PmbusaRegs	PMBUS_REGS	PMBUSA_BASE	0x0000_6400	YES	YES	YES	YES	YES
HicRegs	HIC_CFG_REGS	HIC_BASE	0x0000_6500	YES	YES	-	-	YES
FsiTxaRegs	FSI_TX_REGS	FSITXA_BASE	0x0000_6600	YES	YES	YES	YES	YES
FsiRxaRegs	FSI_RX_REGS	FSIRXA_BASE	0x0000_6680	YES	YES	YES	YES	YES
Peripheral Frame 3 (PF3)								
AdcaRegs	ADC_REGS	ADCA_BASE	0x0000_7400	YES	-	-	YES	YES
AdcbRegs	ADC_REGS	ADCB_BASE	0x0000_7480	YES	-	-	YES	YES
AdccRegs	ADC_REGS	ADCC_BASE	0x0000_7500	YES	-	-	YES	YES
Peripheral Frame 4 (PF4)								
InputXbarRegs	INPUT_XBAR_REGS	INPUTXBAR_BASE	0x0000_7900	YES	-	-	-	YES
XbarRegs	XBAR_REGS	XBAR_BASE	0x0000_7920	YES	-	-	-	YES
SyncSocRegs	SYNC_SOC_REGS	SYNCSOC_BASE	0x0000_7940	YES	-	-	-	YES
ClbInputXbarRegs	INPUT_XBAR_REGS	CLBINPUTXBAR_BASE	0x0000_7960	YES	-	-	-	YES
DmaClaSrcSelRegs	DMA_CLA_SRC_SEL_REGS	DMACLASRCSEL_BASE	0x0000_7980	YES	-	-	-	YES
EPwmXbarRegs	EPWM_XBAR_REGS	EPWMXBAR_BASE	0x0000_7A00	YES	-	-	-	YES
ClbXbarRegs	CLB_XBAR_REGS	CLBXBAR_BASE	0x0000_7A40	YES	-	-	-	YES
OutputXbarRegs	OUTPUT_XBAR_REGS	OUTPUTXBAR_BASE	0x0000_7A80	YES	-	-	-	YES
ClbOutputXbarRegs	OUTPUT_XBAR_REGS	CLBOUTPUTXBAR_BASE	0x0000_7BC0	YES	-	-	-	YES
GpioCtrlRegs	GPIO_CTRL_REGS	GPIOCTRL_BASE	0x0000_7C00	YES	-	-	-	YES
GpioDataRegs	GPIO_DATA_REGS	GPIODATA_BASE	0x0000_7F00	YES	-	-	YES	YES
GpioDataReadRegs	GPIO_DATA_READ_REGS	GPIODATAREAD_BASE	0x0000_7F80	YES	-	YES	YES	YES
ClkCfgRegs	CLK_CFG_REGS	CLKCFG_BASE	0x0005_D200	YES	-	-	-	YES
CpuSysRegs	CPU_SYS_REGS	CPUSYS_BASE	0x0005_D300	YES	-	-	-	YES
SysStatusRegs	SYS_STATUS_REGS	SYSSTAT_BASE	0x0005_D400	YES	-	-	-	YES
PeriphAcRegs	PERIPH_AC_REGS	PERIPHAC_BASE	0x0005_D500	YES	-	-	-	YES
AnalogSubsysRegs	ANALOG_SUBSYS_REGS	ANALOGSUBSYS_BASE	0x0005_D700	YES	-	-	-	YES
Peripheral Frame 5 (PF5)								
DevCfgRegs	DEV_CFG_REGS	DEVCFG_BASE	0x0005_D000	YES	-	-	-	YES
EradGlobalRegs	ERAD_GLOBAL_REGS	ERAD_GLOBAL_BASE	0x0005_E800	YES	-	-	-	YES
EradHWBP1Regs	ERAD_HWBP_REGS	ERAD_HWBP1_BASE	0x0005_E900	YES	-	-	-	YES
EradHWBP2Regs	ERAD_HWBP_REGS	ERAD_HWBP2_BASE	0x0005_E908	YES	-	-	-	YES
EradHWBP3Regs	ERAD_HWBP_REGS	ERAD_HWBP3_BASE	0x0005_E910	YES	-	-	-	YES
EradHWBP4Regs	ERAD_HWBP_REGS	ERAD_HWBP4_BASE	0x0005_E918	YES	-	-	-	YES
EradHWBP5Regs	ERAD_HWBP_REGS	ERAD_HWBP5_BASE	0x0005_E920	YES	-	-	-	YES
EradHWBP6Regs	ERAD_HWBP_REGS	ERAD_HWBP6_BASE	0x0005_E928	YES	-	-	-	YES
EradHWBP7Regs	ERAD_HWBP_REGS	ERAD_HWBP7_BASE	0x0005_E930	YES	-	-	-	YES
EradHWBP8Regs	ERAD_HWBP_REGS	ERAD_HWBP8_BASE	0x0005_E938	YES	-	-	-	YES
EradCounter1Regs	ERAD_COUNTER_REGS	ERAD_COUNTER1_BASE	0x0005_E980	YES	-	-	-	YES

Copyright © 2022 Texas Instruments Incorporated

Table 7-4. Peripheral Registers Memory Map (C28) (continued)

Bit Field Name		DriverLib Name	Base Address	CPU1	DMA	HIC	CLA	Pipeline Protected
Instance	Structure							
EradCounter2Regs	ERAD_COUNTER_REGS	ERAD_COUNTER2_BASE	0x0005_E990	YES	-	-	-	YES
EradCounter3Regs	ERAD_COUNTER_REGS	ERAD_COUNTER3_BASE	0x0005_E9A0	YES	-	-	-	YES
EradCounter4Regs	ERAD_COUNTER_REGS	ERAD_COUNTER4_BASE	0x0005_E9B0	YES	-	-	-	YES
EradCRCGlobalRegs	ERAD_CRC_GLOBAL_REGS	ERAD_CRC_GLOBAL_BASE	0x0005_EA00	YES	-	-	-	YES
EradCRC1Regs	ERAD_CRC_REGS	ERAD_CRC1_BASE	0x0005_EA10	YES	-	-	-	YES
EradCRC2Regs	ERAD_CRC_REGS	ERAD_CRC2_BASE	0x0005_EA20	YES	-	-	-	YES
EradCRC3Regs	ERAD_CRC_REGS	ERAD_CRC3_BASE	0x0005_EA30	YES	-	-	-	YES
EradCRC4Regs	ERAD_CRC_REGS	ERAD_CRC4_BASE	0x0005_EA40	YES	-	-	-	YES
EradCRC5Regs	ERAD_CRC_REGS	ERAD_CRC5_BASE	0x0005_EA50	YES	-	-	-	YES
EradCRC6Regs	ERAD_CRC_REGS	ERAD_CRC6_BASE	0x0005_EA60	YES	-	-	-	YES
EradCRC7Regs	ERAD_CRC_REGS	ERAD_CRC7_BASE	0x0005_EA70	YES	-	-	-	YES
EradCRC8Regs	ERAD_CRC_REGS	ERAD_CRC8_BASE	0x0005_EA80	YES	-	-	-	YES
Epg1Regs	EPG_REGS	EPG1_BASE	0x0005_EC00	YES	-	-	-	YES
Epg1MuxRegs	EPG_MUX_REGS	EPG1MUX_BASE	0x0005_ECD0	YES	-	-	-	YES
DcsmZ1Regs	DCSM_Z1_REGS	DCSM_Z1_BASE	0x0005_F000	YES	-	-	-	YES
DcsmZ2Regs	DCSM_Z2_REGS	DCSM_Z2_BASE	0x0005_F080	YES	-	-	-	YES
DcsmCommonRegs	DCSM_COMMON_REGS	DCSMCOMMON_BASE	0x0005_F0C0	YES	-	-	-	YES
MemCfgRegs	MEM_CFG_REGS	MEMCFG_BASE	0x0005_F400	YES	-	-	-	YES
AccessProtectionRegs	ACCESS_PROTECTION_REGS	ACCESSPROTECTION_BASE	0x0005_F500	YES	-	-	-	YES
MemoryErrorRegs	MEMORY_ERROR_REGS	MEMORYERROR_BASE	0x0005_F540	YES	-	-	-	YES
TestErrorRegs	TEST_ERROR_REGS	TESTERROR_BASE	0x0005_F590	YES	-	-	-	YES
Flash0CtrlRegs	FLASH_CTRL_REGS	FLASH0CTRL_BASE	0x0005_F800	YES	-	-	-	YES
Flash0EccRegs	FLASH_ECC_REGS	FLASH0ECC_BASE	0x0005_FB00	YES	-	-	-	YES
Peripheral Frame 7 (PF7)								
CanaRegs	CAN_REGS	CANA_BASE	0x0004_8000	YES	YES	YES	-	YES
-	-	CANA_MSG_RAM_BASE	0x0004_9000	YES	YES	YES	-	YES
-	-	MCAN_MSG_RAM_BASE	0x0005_8000	YES	-	YES	-	YES
McanaSsRegs	MCANASS_REGS	MCANASS_BASE	0x0005_C400	YES	-	YES	-	YES
McanaRegs	MCANA_REGS	MCANA_BASE	0x0005_C600	YES	-	YES	-	YES
McanaErrorRegs	MCANA_ERROR_REGS	MCANA_ERROR_BASE	0x0005_C800	YES	-	YES	-	YES
HwbistRegs	HWBIST_REGS	HWBIST_BASE	0x0005_E000	YES	-	-	-	YES
MpostRegs	MPOST_REGS	MPOST_BASE	0x0005_E200	YES	-	-	-	YES
Dcc0Regs	DCC_REGS	DCC0_BASE	0x0005_E700	YES	-	-	-	YES
Dcc1Regs	DCC_REGS	DCC1_BASE	0x0005_E740	YES	-	-	-	YES
Peripheral Frame 8 (PF8)								
LinaRegs	LIN_REGS	LINA_BASE	0x0000_6A00	YES	YES	YES	YES	YES
LinbRegs	LIN_REGS	LINB_BASE	0x0000_6B00	YES	YES	YES	YES	YES
Peripheral Frame 9 (PF9)								
WdRegs	WD_REGS	WD_BASE	0x0000_7000	YES	-	-	-	YES
NmiIntruptRegs	NMI_INTRUPT_REGS	NMI_BASE	0x0000_7060	YES	-	-	-	YES
XintRegs	XINT_REGS	XINT_BASE	0x0000_7070	YES	-	-	-	YES
SciaRegs	SCI_REGS	SCIA_BASE	0x0000_7200	YES	-	YES	-	YES
ScibRegs	SCI_REGS	SCIB_BASE	0x0000_7210	YES	-	YES	-	YES
I2caRegs	I2C_REGS	I2CA_BASE	0x0000_7300	YES	-	YES	-	YES
I2cbRegs	I2C_REGS	I2CB_BASE	0x0000_7340	YES	-	YES	-	YES

Copyright © 2022 Texas Instruments Incorporated

Table 7-4. Peripheral Registers Memory Map (C28) (continued)

Bit Field Name		DriverLib Name	Base Address	CPU1	DMA	HIC	CLA	Pipeline Protected
Instance	Structure							
Peripheral Frame 10 (PF10)								
Clb1LogicCfgRegs	CLB_LOGIC_CONFIG_REGS	CLB1_LOGICCFG_BASE	0x0000_3000	YES	-	YES	YES	-
Clb1LogicCtrlRegs	CLB_LOGIC_CONTROL_REGS	CLB1_LOGICCTRL_BASE	0x0000_3100	YES	-	YES	YES	-
Clb1DataExchRegs	CLB_DATA_EXCHANGE_REGS	CLB1_DATAEXCH_BASE	0x0000_3180	YES	-	YES	YES	-
Clb2LogicCfgRegs	CLB_LOGIC_CONFIG_REGS	CLB2_LOGICCFG_BASE	0x0000_3400	YES	-	YES	YES	-
Clb2LogicCtrlRegs	CLB_LOGIC_CONTROL_REGS	CLB2_LOGICCTRL_BASE	0x0000_3500	YES	-	YES	YES	-
Clb2DataExchRegs	CLB_DATA_EXCHANGE_REGS	CLB2_DATAEXCH_BASE	0x0000_3580	YES	-	YES	YES	-
Clb3LogicCfgRegs	CLB_LOGIC_CONFIG_REGS	CLB3_LOGICCFG_BASE	0x0000_3800	YES	-	YES	YES	-
Clb3LogicCtrlRegs	CLB_LOGIC_CONTROL_REGS	CLB3_LOGICCTRL_BASE	0x0000_3900	YES	-	YES	YES	-
Clb3DataExchRegs	CLB_DATA_EXCHANGE_REGS	CLB3_DATAEXCH_BASE	0x0000_3980	YES	-	YES	YES	-
Clb4LogicCfgRegs	CLB_LOGIC_CONFIG_REGS	CLB4_LOGICCFG_BASE	0x0000_3C00	YES	-	YES	YES	-
Clb4LogicCtrlRegs	CLB_LOGIC_CONTROL_REGS	CLB4_LOGICCTRL_BASE	0x0000_3D00	YES	-	YES	YES	-
Clb4DataExchRegs	CLB_DATA_EXCHANGE_REGS	CLB4_DATAEXCH_BASE	0x0000_3D80	YES	-	YES	YES	-
Peripheral Frame 11 (PF11)								
AesaRegs	AES_IP_REGS	AESA_BASE	0x0004_2000	YES	YES	-	-	-
AesaSsRegs	AES_WRAPPER_REGS	AESA_SS_BASE	0x0004_2C00	YES	YES	-	-	-
Peripheral Frame 12 (PF12)								
LfuRegs	LFU_REGS	LFU_BASE	0x0000_7FE0	YES	-	-	YES	YES

Copyright © 2022 Texas Instruments Incorporated

7.4 Identification

Table 7-5 lists the Device Identification Registers. Additional information on these device identification registers can be found in the *TMS320F28003x Real-Time Microcontrollers Technical Reference Manual*. See the register descriptions of PARTIDH and PARTIDL for identification of production status (TMX or TMS) and other device information.

Table 7-5. Device Identification Registers

NAME	ADDRESS	SIZE (x16)	DESCRIPTION
PARTIDH	0x0005 D00A	2	Device part identification number TMS320F280039C 0x05FF 0500 TMS320F280039 0x05FF 0500 TMS320F280038C 0x05FE 0500 TMS320F280038 0x05FE 0500 TMS320F280037C 0x05FD 0500 TMS320F280037 0x05FD 0500 TMS320F280036C 0x05FC 0500 TMS320F280036 0x05FC 0500 TMS320F280034 0x05FA 0500 TMS320F280033 0x05F9 0500
REVID	0x0005 D00C	2	Silicon revision number Revision 0 0x0000 0000
UID_UNIQUE	0x0007 01F4	2	Unique identification number. This number is different on each individual device with the same PARTIDH. This unique number can be used as a serial number in the application. This number is present only on TMS devices.

Copyright © 2022 Texas Instruments Incorporated

7.5 Bus Architecture – Peripheral Connectivity

The Peripheral Connectivity table lists a broad view of the peripheral and configuration register accessibility from each bus master.

Table 7-6. Peripheral Connectivity

PERIPHERAL	DMA	HIC	BGCRC	CLA	C28
SYSTEM PERIPHERALS					
CPU Timers					Y
ERAD					Y
GPIO Data		Y		Y	Y
GPIO Pin Mapping and Configuration					Y
XBAR Configuration					Y
System Configuration					Y
AES	Y				Y
EPG					Y
LFU				Y	Y
DCC					Y
MEMORY					
M0/M1			Y		Y
LSx			Y	Y	Y
GSx	Y	Y	Y		Y
ROM			Y		Y
FLASH					Y
CONTROL PERIPHERALS					
ePWM/HRPWM	Y	Y		Y	Y
eCAP/HRCAP	Y	Y		Y	Y
eQEP(1)	Y	Y		Y	Y
CLB		Y		Y	Y
SDFM	Y	Y		Y	Y
ANALOG PERIPHERALS					
CMPSS(1)	Y	Y		Y	Y
DAC(1)	Y	Y		Y	Y
ADC Configuration				Y	Y
ADC Results(1)	Y	Y		Y	Y
COMMUNICATION PERIPHERALS					
DCAN	Y	Y			Y
MCAN		Y			Y
FSITX/FSIRX	Y	Y		Y	Y
I2C		Y			Y
LIN	Y	Y		Y	Y
PMBus	Y	Y		Y	Y
SCI		Y			Y
SPI	Y	Y		Y	Y

(1) These modules are accessible from DMA but cannot trigger a DMA transfer.

Copyright © 2022 Texas Instruments Incorporated

7.6 C28x Processor

The CPU is a 32-bit fixed-point processor. This device draws from the best features of digital signal processing; reduced instruction set computing (RISC); and microcontroller architectures, firmware, and tool sets.

The CPU features include a modified Harvard architecture and circular addressing. The RISC features are single-cycle instruction execution, register-to-register operations, and modified Harvard architecture. The microcontroller features include ease of use through an intuitive instruction set, byte packing and unpacking, and bit manipulation. The modified Harvard architecture of the CPU enables instruction and data fetches to be performed in parallel. The CPU can read instructions and data while it writes data simultaneously to maintain the single-cycle instruction operation across the pipeline. The CPU does this over six separate address/data buses.

For more information on CPU architecture and instruction set, see the *TMS320C28x CPU and Instruction Set Reference Guide*.

7.6.1 Floating-Point Unit (FPU)

The C28x plus floating-point (C28x+FPU) processor extends the capabilities of the C28x fixed-point CPU by adding registers and instructions to support IEEE single-precision floating-point operations.

Devices with the C28x+FPU include the standard C28x register set plus an additional set of floating-point unit registers. The additional floating-point unit registers are the following:

- Eight floating-point result registers, RnH (where n = 0–7)
- Floating-point Status Register (STF)
- Repeat Block Register (RB)

All of the floating-point registers, except the RB, are shadowed. This shadowing can be used in high-priority interrupts for fast context save and restore of the floating-point registers.

For more information on the C28x Floating Point Unit (FPU), see the *TMS320C28x Extended Instruction Sets Technical Reference Manual*.

7.6.2 Fast Integer Division Unit

The Fast Integer Division (FINTDIV) unit of the C28x CPU uniquely supports three types of integer division (Truncated, Modulus, Euclidean) of varying data type sizes (16/16, 32/16, 32/32, 64/32, 64/64) in unsigned or signed formats.

- Truncated integer division is naturally supported by C language (/, % operators).
- Modulus and Euclidean divisions are variants that are more efficient for control algorithms and are supported by C intrinsics.

All three types of integer division produce both a quotient and remainder component, are interruptible, and execute in a minimum number of deterministic cycles (10 cycles for a 32/32 division). In addition, the Fast Division capabilities of the C28x CPU uniquely support fast execution of floating-point 32-bit (in 5 cycles) and 64-bit (in 20 cycles) division.

For more information about fast integer division, see the *Fast Integer Division – A Differentiated Offering From C2000™ Product Family Application Report*.

7.6.3 Trigonometric Math Unit (TMU)

The trigonometric math unit (TMU) extends the capabilities of a C28x+FPU by adding instructions and leveraging existing FPU instructions to speed up the execution of common trigonometric and arithmetic operations listed in Table 7-7.

Table 7-7. TMU Supported Instructions

Instructions	C Equivalent Operation	Pipeline Cycles
MPY2PIF32 RaH,RbH	a = b * 2pi	2/3
DIV2PIF32 RaH,RbH	a = b / 2pi	2/3
DIVF32 RaH,RbH,RcH	a = b/c	5
SQRTF32 RaH,RbH	a = sqrt(b)	5

Copyright © 2022 Texas Instruments Incorporated

Table 7-7. TMU Supported Instructions (continued)

Instructions	C Equivalent Operation	Pipeline Cycles
SINPUF32 RaH,RbH	a = sin(b*2pi)	4
COSPUF32 RaH,RbH	a = cos(b*2pi)	4
ATANPUF32 RaH,RbH	a = atan(b)/2pi	4
QUADF32 RaH,RbH,RcH,RdH	Operation to assist in calculating ATANPU2	5

No changes have been made to existing instructions, pipeline or memory bus architecture. All TMU instructions use the existing FPU register set (R0H to R7H) to carry out their operations.

For more information, see the *TMS320C28x Extended Instruction Sets Technical Reference Manual*.

7.6.4 VCRC Unit

Cyclic redundancy check (CRC) algorithms provide a straightforward method for verifying data integrity over large data blocks, communication packets, or code sections. The C28x+VCRC can perform 8-bit, 16-bit, 24-bit, and 32-bit CRCs. For example, the VCRC can compute the CRC for a block length of 10 bytes in 10 cycles. A CRC result register contains the current CRC, which is updated whenever a CRC instruction is executed.

The following are the CRC polynomials used by the CRC calculation logic of the VCRC:

- CRC8 polynomial = 0x07
- CRC16 polynomial 1 = 0x8005
- CRC16 polynomial 2 = 0x1021
- CRC24 polynomial = 0x5d6dcb
- CRC32 polynomial 1 = 0x04c11db7
- CRC32 polynomial 2 = 0x1edc6f41

This module can calculate CRCs for a byte of data in a single cycle. The CRC calculation for CRC8, CRC16, CRC24, and CRC32 is done byte-wise (instead of computing on a complete 16-bit or 32-bit data read by the C28x core) to match the byte-wise computation requirement mandated by various standards.

The VCRC Unit also allows the user to provide the size (1b-32b) and value of any polynomial to fit custom CRC requirements. The CRC execution time increases to three cycles when using a custom polynomial.

For more information on the Cyclic Redundancy Check (VCRC) instruction sets, see the *TMS320C28x Extended Instruction Sets Technical Reference Manual*.

Copyright © 2022 Texas Instruments Incorporated

7.7 Control Law Accelerator (CLA)

The CLA Type-2 is an independent, fully programmable, 32-bit floating-point math processor that brings concurrent control-loop execution to the C28x family. The low interrupt-latency of the CLA allows it to read ADC samples "just-in-time." This significantly reduces the ADC sample to output delay to enable faster system response and higher MHz control loops. By using the CLA to service time-critical control loops, the main CPU is free to perform other system tasks such as communications and diagnostics.

The control law accelerator extends the capabilities of the C28x CPU by adding parallel processing. Time-critical control loops serviced by the CLA can achieve low ADC sample to output delay. Thus, the CLA enables faster system response and higher frequency control loops. Using the CLA for time-critical tasks frees up the main CPU to perform other system and communication functions concurrently.

The following is a list of major features of the CLA:

- Clocked at the same rate as the main CPU (SYSCLKOUT).
- An independent architecture allowing CLA algorithm execution independent of the main C28x CPU.
  - Complete bus architecture:
    - Program Address Bus (PAB) and Program Data Bus (PDB)
    - Data Read Address Bus (DRAB), Data Read Data Bus (DRDB), Data Write Address Bus (DWAB), and Data Write Data Bus (DWDB)
  - Independent 8-stage pipeline.
  - 16-bit program counter (MPC)
  - Four 32-bit result registers (MR0 to MR3)
  - Two 16-bit auxiliary registers (MAR0, MAR1)
  - Status register (MSTF)
- Instruction set includes:
  - IEEE single-precision (32-bit) floating-point math operations
  - Floating-point math with parallel load or store
  - Floating-point multiply with parallel add or subtract
  - 1/X and 1/sqrt(X) estimations
  - Data type conversions
  - Conditional branch and call
  - Data load/store operations
- The CLA program code can consist of up to eight tasks or interrupt service routines, or seven tasks and a main background task.
  - The start address of each task is specified by the MVECT registers.
  - No limit on task size as long as the tasks fit within the configurable CLA program memory space.
  - One task is serviced at a time until its completion. There is no nesting of tasks.
  - Upon task completion a task-specific interrupt is flagged within the PIE.
  - When a task finishes the next highest-priority pending task is automatically started.
  - The Type-2 CLA can have a main task that runs continuously in the background, while other high-priority events trigger a foreground task.
- Task trigger mechanisms:
  - C28x CPU through the IACK instruction
  - Task1 to Task8: up to 256 possible trigger sources from peripherals connected to the shared bus on which the CLA assumes secondary ownership.
  - Task8 can be set to be the background task, while Tasks 1 to 7 take peripheral triggers.
- Memory and Shared Peripherals:
  - Two dedicated message RAMs for communication between the CLA and the main CPU.
  - The C28x CPU can map CLA program and data memory to the main CPU space or CLA space.

Copyright © 2022 Texas Instruments Incorporated

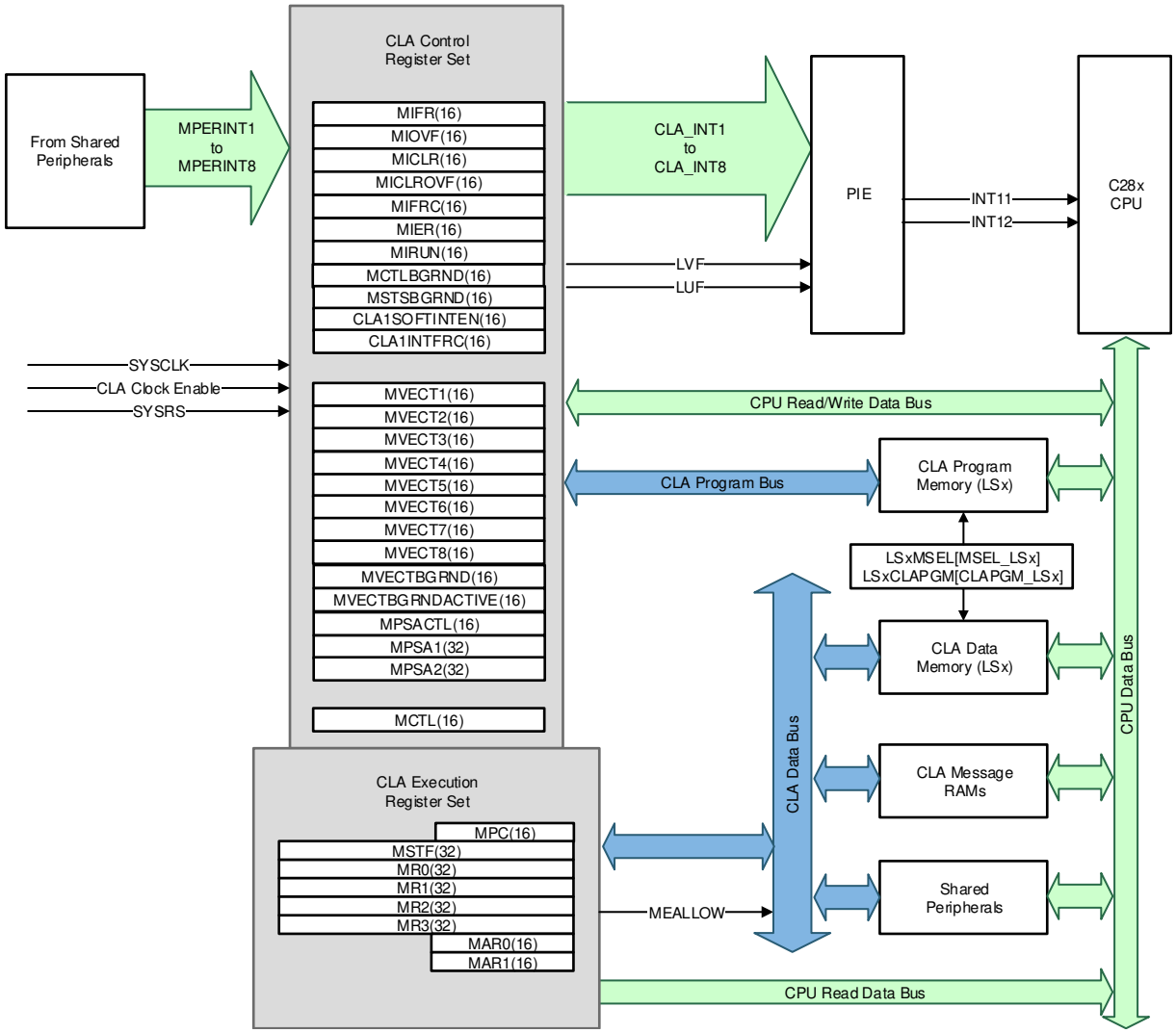

Figure 7-2. CLA Block Diagram

7.8 Embedded Real-Time Analysis and Diagnostic (ERAD)

The ERAD module enhances the debug and system-analysis capabilities of the device. The debug and system-analysis enhancements provided by the ERAD module is done outside of the CPU. The ERAD module consists of the Enhanced Bus Comparator units and the System Event Counter units. The Enhanced Bus Comparator units are used to generate hardware breakpoints, hardware watch points, and other output events. The System Event Counter units are used to analyze and profile the system. The ERAD module is accessible by the debugger and by the application software, which significantly increases the debug capabilities of many real-time systems, especially in situations where debuggers are not connected. In the TMS320F28003x devices, the ERAD module contains eight Enhanced Bus Comparator units (which increases the number of Hardware breakpoints from two to ten) and four Benchmark System Event Counter units.

7.9 Background CRC-32 (BGCRC)

The Background CRC (BGCRC) module computes a CRC-32 on a configurable block of memory. It accomplishes this by fetching the specified block of memory during idle cycles (when the CPU, HIC, CLA or DMA is not accessing the memory block). The calculated CRC-32 value is compared against a golden CRC-32 value to indicate a pass or fail. In essence, the BGCRC helps identify memory faults and corruption.

The BGCRC module has the following features:

- One cycle CRC-32 computation on 32 bits of data
- No CPU bandwidth impact for zero wait state memory
- Minimal CPU bandwidth impact for non-zero wait state memory
- Dual operation modes (CRC-32 mode and scrub mode)
- Watchdog timer to time CRC-32 completion
- Ability to pause and resume CRC-32 computation

Copyright © 2022 Texas Instruments Incorporated

7.10 Direct Memory Access (DMA)

The DMA module provides a hardware method of transferring data between peripherals and/or memory without intervention from the CPU, thereby freeing up bandwidth for other system functions. Additionally, the DMA has the capability to orthogonally rearrange the data as it is transferred as well as “ping-pong” data between buffers. These features are useful for structuring data into blocks for optimal CPU processing. Figure 7-3 shows a device-level block diagram of the DMA.

DMA features include:

- Six channels with independent PIE interrupts
- Peripheral interrupt trigger sources
  - ADC interrupts and EVT signals
  - External Interrupts
  - ePWM SOC signals
  - CPU timers
  - eCAP
  - SPI transmit and receive
  - CAN transmit and receive
  - LIN transmit and receive
- Data sources and destinations:
  - GSx RAM
  - ADC result registers
  - Control peripheral registers (ePWM, eQEP, eCAP)
  - SPI, LIN, CAN, and PMBus registers
- Word Size: 16-bit or 32-bit (SPI limited to 16-bit)
- Throughput: Four cycles per word without arbitration

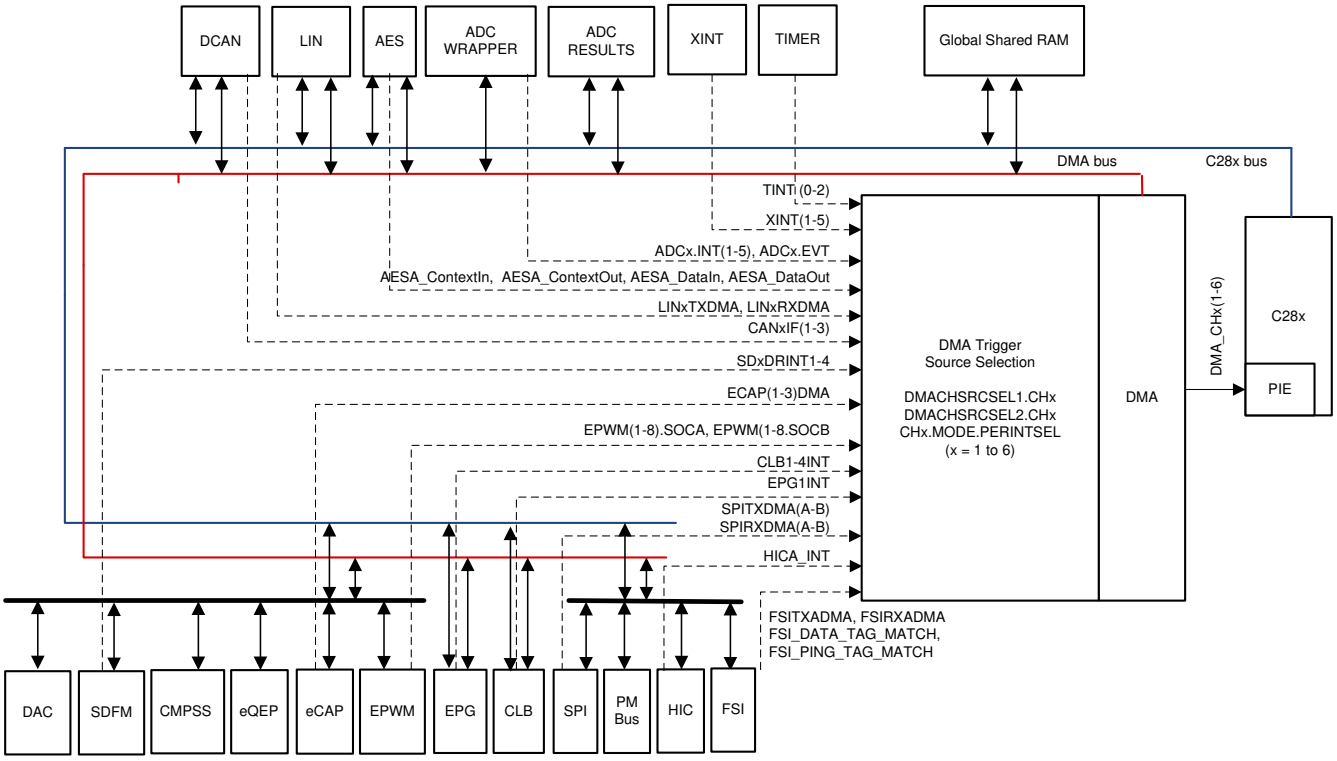

Figure 7-3. DMA Block Diagram

7.11 Device Boot Modes

This section explains the default boot modes, as well as all the available boot modes supported on this device. The boot ROM uses the boot mode select, general-purpose input/output (GPIO) pins to determine the boot mode configuration.

Table 7-8 shows the boot mode options available for selection by the default boot mode select pins. Users have the option to program the device to customize the boot modes selectable in the boot-up table as well as the boot mode select pin GPIOs used.

All the peripheral boot modes that are supported use the first instance of the peripheral module (SCIA, SPIA, I2CA, CANA, and so forth). Whenever these boot modes are referred to in this chapter, such as SCI boot, it is actually referring to the first module instance, which means the SCI boot on the SCIA port. The same applies to the other peripheral boots.

See Section 6.12.2.2.2 and the Power-on Reset figure for $t_{boot\text{-}flash}$, the boot ROM execution time to first instruction fetch in flash.

Table 7-8. Device Default Boot Modes

BOOT MODE	GPIO24 (DEFAULT BOOT MODE SELECT PIN 1)	GPIO32 (DEFAULT BOOT MODE SELECT PIN 0)
Parallel IO	0	0
SCI / Wait Boot(1)	0	1
CAN	1	0
Flash	1	1

(1) SCI boot mode can be used as a wait boot mode as long as SCI continues to wait for an 'A' or 'a' during the SCI autobaud lock process.

Copyright © 2022 Texas Instruments Incorporated

7.11.1 Device Boot Configurations

This section details what boot configurations are available and how to configure them. This device supports from 0 boot mode select pins up to 3 boot mode select pins as well as from 1 configured boot mode up to 8 configured boot modes.

To change and configure the device from the default settings to custom settings for your application, use the following process:

1. Determine all the various ways you want application to be able to boot. (For example: Primary boot option of Flash boot for your main application, secondary boot option of CAN boot for firmware updates, tertiary boot option of SCI boot for debugging, etc)
2. Based on the number of boot modes needed, determine how many boot mode select pins (BMSPs) are required to select between your selected boot modes. (For example: 2 BMSPs are required to select between 3 boot mode options)
3. Assign the required BMSPs to a physical GPIO pin. (For example, BMSP0 to GPIO10, BMSP1 to GPIO51, and BMSP2 left as default which is disabled). Refer to Section 7.11.1.1 for all the details on performing these configurations.
4. Assign the determined boot mode definitions to indexes in your custom boot table that correlate to the decoded value of the BMSPs. For example, BOOTDEF0=Boot to Flash, BOOTDEF1=CAN Boot, BOOTDEF2=SCI Boot; all other BOOTDEFx are left as default/nothing). Refer to Section 7.11.1.2 for all the details on setting up and configuring the custom boot mode table.

Additionally, the Boot Mode Example Use Cases section of the *TMS320F28003x Real-Time Microcontrollers Technical Reference Manual* provides some example use cases on how to configure the BMSPs and custom boot tables.

Note

The CAN boot mode turns on the XTAL. Be sure an XTAL is installed in the application before using CAN boot mode.

Copyright © 2022 Texas Instruments Incorporated

7.11.1.1 Configuring Boot Mode Pins

This section explains how the boot mode select pins can be customized by the user, by programming the BOOTPIN-CONFIG location (refer to Table 7-9) in the user-configurable dual-zone security module (DCSM) OTP. The location in the DCSM OTP is Z1-OTP-BOOTPIN-CONFIG or Z2-OTP-BOOTPIN-CONFIG. When debugging, EMU-BOOTPIN-CONFIG is the emulation equivalent of Z1-OTP-BOOTPIN-CONFIG/Z2-OTP-BOOTPIN-CONFIG, and can be programmed to experiment with different boot modes without writing to OTP. The device can be programmed to use 0, 1, 2, or 3 boot mode select pins as needed.

Note

When using Z2-OTP-BOOTPIN-CONFIG, the configurations programmed in this location will take priority over the configurations in Z1-OTP-BOOTPIN-CONFIG. It is recommended to use Z1-OTP-BOOTPIN-CONFIG first and then if OTP configurations need to be altered, switch to using Z2-OTP-BOOTPIN-CONFIG.

Table 7-9. BOOTPIN-CONFIG Bit Fields

BIT	NAME	DESCRIPTION
31:24	Key	Write 0x5A to these 8-bits to indicate the bits in this register are valid
23:16	Boot Mode Select Pin 2 (BMSP2)	Refer to BMSP0 description except for BMSP2
15:8	Boot Mode Select Pin 1 (BMSP1)	Refer to BMSP0 description except for BMSP1
7:0	Boot Mode Select Pin 0 (BMSP0)	Set to the GPIO pin to be used during boot (up to 255): - 0x0 = GPIO0 - 0x01 = GPIO1 - and so on Writing 0xFF disables BMSP0 and this pin is no longer used to select the boot mode.

The following GPIOs cannot be used as a BMSP. If selected for a particular BMSP, the boot ROM automatically selects the factory default GPIO (the factory default for BMSP2 is 0xFF, which disables the BMSP).

- GPIO 20 and GPIO 21
- GPIO 36 and GPIO 38
- GPIO 62 to GPIO 223

Copyright © 2022 Texas Instruments Incorporated

Table 7-10. Standalone Boot Mode Select Pin Decoding

BOOTPIN_CONFIG KEY	BMSP0	BMSP1	BMSP2	REALIZED BOOT MODE
!= 0x5A	Don't Care	Don't Care	Don't Care	Boot as defined by the factory default BMSPs
= 0x5A	0xFF	0xFF	0xFF	Boot as defined in the boot table for boot mode 0 (All BMSPs disabled)
	Valid GPIO	0xFF	0xFF	Boot as defined by the value of BMSP0 (BMSP1 and BMSP2 disabled)
	0xFF	Valid GPIO	0xFF	Boot as defined by the value of BMSP1 (BMSP0 and BMSP2 disabled)
	0xFF	0xFF	Valid GPIO	Boot as defined by the value of BMSP2 (BMSP0 and BMSP1 disabled)
	Valid GPIO	Valid GPIO	0xFF	Boot as defined by the values of BMSP0 and BMSP1 (BMSP2 disabled)
	Valid GPIO	0xFF	Valid GPIO	Boot as defined by the values of BMSP0 and BMSP2 (BMSP1 disabled)
	0xFF	Valid GPIO	Valid GPIO	Boot as defined by the values of BMSP1 and BMSP2 (BMSP0 disabled)
	Valid GPIO	Valid GPIO	Valid GPIO	Boot as defined by the values of BMSP0, BMSP1, and BMSP2
	Invalid GPIO	Valid GPIO	Valid GPIO	BMSP0 is reset to the factory default BMSP0 GPIO Boot as defined by the values of BMSP0, BMSP1, and BMSP2
	Valid GPIO	Invalid GPIO	Valid GPIO	BMSP1 is reset to the factory default BMSP1 GPIO Boot as defined by the values of BMSP0, BMSP1, and BMSP2
	Valid GPIO	Valid GPIO	Invalid GPIO	BMSP2 is reset to the factory default state, which is disabled Boot as defined by the values of BMSP0 and BMSP1

Note

When decoding the boot mode, BMSP0 is the least-significant-bit and BMSP2 is the most-significant-bit of the boot table index value. It is recommended when disabling BMSPs to start with disabling BMSP2. For example, in an instance when only using BMSP2 (BMSP1 and BMSP0 are disabled), then only the boot table indexes of 0 and 4 will be selectable. In the instance when using only BMSP0, then the selectable boot table indexes are 0 and 1.

Copyright © 2022 Texas Instruments Incorporated

7.11.1.2 Configuring Boot Mode Table Options

This section explains how to configure the boot definition table, BOOTDEF, for the device and the associated boot options. The 64-bit location is located in user-configurable DCSM OTP in the Z1-OTP-BOOTDEF-LOW and Z1-OTP-BOOTDEF-HIGH locations. When debugging, EMU-BOOTDEF-LOW and EMU-BOOTDEF-HIGH are the emulation equivalents of Z1-OTP-BOOTDEF-LOW and Z1-OTP-BOOTDEF-HIGH, and can be programmed to experiment with different boot mode options without writing to OTP. The range of customization to the boot definition table depends on how many boot mode select pins (BMSP) are being used. For example, 0 BMSPs equals to 1 table entry, 1 BMSP equals to 2 table entries, 2 BMSPs equals to 4 table entries, and 3 BMSPs equals to 8 table entries. Refer to the *TMS320F28003x Real-Time Microcontrollers Technical Reference Manual* for examples on how to set up the BOOTPIN_CONFIG and BOOTDEF values.

Note

The locations Z2-OTP-BOOTDEF-LOW and Z2-OTP-BOOTDEF-HIGH will be used instead of Z1-OTP-BOOTDEF-LOW and Z1-OTP-BOOTDEF-HIGH locations when Z2-OTP-BOOTPIN-CONFIG is configured. Refer to Configuring Boot Mode Pins for more details on BOOTPIN_CONFIG usage.

Table 7-11. BOOTDEF Bit Fields

BOOTDEF NAME	BYTE POSITION	NAME	DESCRIPTION
BOOT_DEF0	7:0	BOOT_DEF0 Mode/Options	Set the boot mode for index 0 of the boot table. Different boot modes and their options can include, for example, a boot mode that uses different GPIOs for a specific bootloader or a different flash entry point address. Any unsupported boot mode will cause the device to either go to wait boot or boot to flash. Refer to *GPIO Assignments* for valid BOOTDEF values to set in the table.
BOOT_DEF1	15:8	BOOT_DEF1 Mode/Options	Refer to BOOT_DEF0 description
BOOT_DEF2	23:16	BOOT_DEF2 Mode/Options	
BOOT_DEF3	31:24	BOOT_DEF3 Mode/Options	
BOOT_DEF4	39:32	BOOT_DEF4 Mode/Options	
BOOT_DEF5	47:40	BOOT_DEF5 Mode/Options	
BOOT_DEF6	55:48	BOOT_DEF6 Mode/Options	
BOOT_DEF7	63:56	BOOT_DEF7 Mode/Options	

Copyright © 2022 Texas Instruments Incorporated

7.11.2 GPIO Assignments

This section details the GPIOs and boot option values used for boot mode set in the BOOT_DEF memory location located at Z1-OTP-BOOTDEF-LOW/ Z2-OTP-BOOTDEF-LOW and Z1-OTP-BOOTDEF-HIGH/ Z2-OTP-BOOTDEF-HIGH. Refer to Configuring Boot Mode Table Options on how to configure BOOT_DEF. When selecting a boot mode option, make sure to verify that the necessary pins are available in the pin mux options for the specific device package being used.

Table 7-12. SCI Boot Options

OPTION	BOOTDEF VALUE	SCITXDA GPIO	SCIRXDA GPIO
0 (default)	0x01	GPIO29	GPIO28
1	0x21	GPIO16	GPIO17
2	0x41	GPIO8	GPIO9
3	0x61	GPIO2	GPIO3
4	0x81	GPIO16	GPIO3

Table 7-13. MCAN Boot Options

OPTION	BOOTDEF VALUE	CANTXA GPIO	CANRXA GPIO
0 (default)	0x08	GPIO4	GPIO5
1	0x28	GPIO1	GPIO0
2	0x48	GPIO13	GPIO12

Table 7-14. DCAN Boot Options

OPTION	BOOTDEF VALUE	CANTXA GPIO	CANRXA GPIO
0 (default)	0x02	GPIO4	GPIO5
1	0x22	GPIO32	GPIO33
2	0x42	GPIO2	GPIO3
3	0x62	GPIO13	GPIO12

Table 7-15. I2C Boot Options

OPTION	BOOTDEF VALUE	SDAA GPIO	SCLA GPIO
0	0x07	GPIO32	GPIO33
1	0x27	GPIO0	GPIO1
2	0x47	GPIO10	GPIO8

Table 7-16. RAM Boot Options

OPTION	BOOTDEF VALUE	RAM ENTRY POINT (ADDRESS)
0	0x05	0x0000 0000

Table 7-17. Flash Boot Options

OPTION	BOOTDEF VALUE	FLASH ENTRY POINT (ADDRESS)	FLASH SECTOR
0 (default)	0x03	0x0008 0000	Bank0 Sector 0
1	0x23	0x0008 8000	Bank 0 Sector 8
2	0x43	0x0008 FFF0	Bank 0 Sector 15
3	0x63	0x0009 0000	Bank 1, Sector 0
4	0x83	0x0009 7FF0	Bank 1, Sector 7
5	0xA3	0x0009 FFF0	Bank 1, Sector 15
6	0xC3	0x000A 0000	Bank 2, Sector 0
7	0xE3	0x000A FFF0	Bank 2, Sector 15

Copyright © 2022 Texas Instruments Incorporated

Table 7-18. LFU Flash Boot Options

OPTION	BOOTDEF VALUE	FLASH ENTRY POINT (ADDRESS)	BANK
0 (default)	0x0B	0x0008 0000	Bank0
		0x0009 0000	Bank1
		0x000A 0000	Bank2
1	0x2B	0x0008 8000	Bank0
		0x0009 8000	Bank1
		0x000A 8000	Bank2
2	0x4B	0x0008 FFF0	Bank0
		0x0009 FFF0	Bank1
		0x000A FFF0	Bank2
3	0x6B	0x0008 8000	Bank0
		0x0009 0000	Bank1
		0x0009 0000	Bank2
4	0x8B	0x0008 EFF0	Bank0
		0x0009 7FF0	Bank1
		0x000A 7FF0	Bank2

Table 7-19. Secure LFU Flash Boot Options

OPTION	BOOTDEF VALUE	FLASH ENTRY POINT (ADDRESS)	BANK
0 (default)	0x0C	0x0008 0000	Bank0
		0x0009 0000	Bank1
		0x000A 0000	Bank2
1	0x2C	0x0008 8000	Bank0
		0x0009 8000	Bank1
		0x000A 8000	Bank2
2	0x4C	0x0008 FFF0	Bank0
		0x0009 FFF0	Bank1
		0x000A FFF0	Bank2
3	0x6C	0x0008 8000	Bank0
		0x0009 0000	Bank1
		0x0009 0000	Bank2
4	0x8C	0x0008 EFF0	Bank0
		0x0009 7FF0	Bank1
		0x000A 7FF0	Bank2

Table 7-20. Wait Boot Options

OPTION	BOOTDEF VALUE	WATCHDOG
0	0x04	Enabled
1	0x24	Disabled

Copyright © 2022 Texas Instruments Incorporated

Table 7-21. SPI Boot Options

OPTION	BOOTDEF VALUE	SPISIMOA	SPISOMIA	SPICLKA	SPISTEA
0	0x06	GPIO2	GPIO1	GPIO3	GPIO5
1	0x26	GPIO16	GPIO1	GPIO3	GPIO0
2	0x46	GPIO8	GPIO10	GPIO9	GPIO11
3	0x66	GPIO8	GPIO17	GPIO9	GPIO11

Table 7-22. Parallel Boot Options

OPTION	BOOTDEF VALUE	D0-D7 GPIO	28x(DSP) CONTROL GPIO	HOST CONTROL GPIO
0 (default)	0x00	D0 - GPIO28	GPIO16	GPIO29
		D1 - GPIO1		
		D2 - GPIO2		
		D3 - GPIO3		
		D4 - GPIO4		
		D5 - GPIO5		
		D6 - GPIO6		
		D7 - GPIO7		
1	0x20	D0 - GPIO0	GPIO16	GPIO11
		D1 - GPIO1		
		D2 - GPIO2		
		D3 - GPIO3		
		D4 - GPIO4		
		D5 - GPIO5		
		D6 - GPIO6		
		D7 - GPIO7		

Copyright © 2022 Texas Instruments Incorporated

7.12 Dual Code Security Module

The dual code security module (DCSM) prevents access to on-chip secure memories. The term “secure” means access to secure memories and resources is blocked. The term “unsecure” means access is allowed; for example, through a debugging tool such as Code Composer Studio™ (CCS).

The code security mechanism offers protection for two zones, Zone 1 (Z1) and Zone 2 (Z2). The security implementation for both the zones is identical. Each zone has its own dedicated secure resource (OTP memory and secure ROM) and allocated secure resource (LSx RAM and flash sectors).

The security of each zone is ensured by its own 128-bit password (CSM password). The password for each zone is stored in an OTP memory location based on a zone-specific link pointer. The link pointer value can be changed to program a different set of security settings (including passwords) in OTP.

Code Security Module Disclaimer

THE CODE SECURITY MODULE (CSM) INCLUDED ON THIS DEVICE WAS DESIGNED TO PASSWORD PROTECT THE DATA STORED IN THE ASSOCIATED MEMORY AND IS WARRANTED BY TEXAS INSTRUMENTS (TI), IN ACCORDANCE WITH ITS STANDARD TERMS AND CONDITIONS, TO CONFORM TO TI'S PUBLISHED SPECIFICATIONS FOR THE WARRANTY PERIOD APPLICABLE FOR THIS DEVICE.

TI DOES NOT, HOWEVER, WARRANT OR REPRESENT THAT THE CSM CANNOT BE COMPROMISED OR BREACHED OR THAT THE DATA STORED IN THE ASSOCIATED MEMORY CANNOT BE ACCESSED THROUGH OTHER MEANS. MOREOVER, EXCEPT AS SET FORTH ABOVE, TI MAKES NO WARRANTIES OR REPRESENTATIONS CONCERNING THE CSM OR OPERATION OF THIS DEVICE, INCLUDING ANY IMPLIED WARRANTIES OF MERCHANTABILITY OR FITNESS FOR A PARTICULAR PURPOSE.

IN NO EVENT SHALL TI BE LIABLE FOR ANY CONSEQUENTIAL, SPECIAL, INDIRECT, INCIDENTAL, OR PUNITIVE DAMAGES, HOWEVER CAUSED, ARISING IN ANY WAY OUT OF YOUR USE OF THE CSM OR THIS DEVICE, WHETHER OR NOT TI HAS BEEN ADVISED OF THE POSSIBILITY OF SUCH DAMAGES. EXCLUDED DAMAGES INCLUDE, BUT ARE NOT LIMITED TO LOSS OF DATA, LOSS OF GOODWILL, LOSS OF USE OR INTERRUPTION OF BUSINESS OR OTHER ECONOMIC LOSS.

Copyright © 2022 Texas Instruments Incorporated

7.13 Watchdog

The watchdog module is the same as the one on previous TMS320C2000 devices, but with an optional lower limit on the time between software resets of the counter. This windowed countdown is disabled by default, so the watchdog is fully backward-compatible.

The watchdog generates either a reset or an interrupt. It is clocked from the internal oscillator with a selectable frequency divider.

Figure 7-4 shows the various functional blocks within the watchdog module.

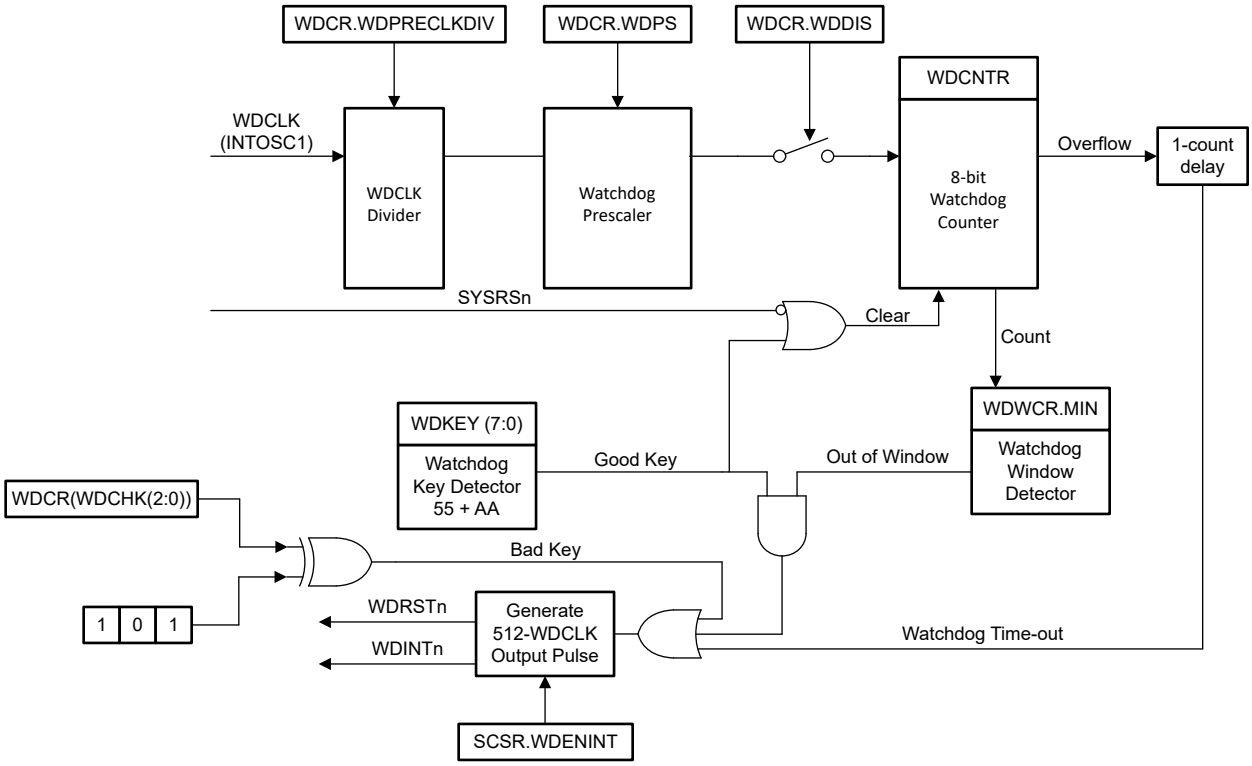

Figure 7-4. Windowed Watchdog

7.14 C28x Timers

CPU-Timers 0, 1, and 2 are identical 32-bit timers with presettable periods and with 16-bit clock prescaling. The timers have a 32-bit count-down register that generates an interrupt when the counter reaches zero. The counter is decremented at the CPU clock speed divided by the prescale value setting. When the counter reaches zero, it is automatically reloaded with a 32-bit period value.

CPU-Timer 0 is for general use and is connected to the PIE block. CPU-Timer 1 is also for general use and is connected to INT13 of the CPU. CPU-Timer 2 is reserved for TI-RTOS. It is connected to INT14 of the CPU. If TI-RTOS is not being used, CPU-Timer 2 is available for general use.

CPU-Timer 2 can be clocked by any one of the following:

- SYSCLK (default)
- Internal zero-pin oscillator 1 (INTOSC1)
- Internal zero-pin oscillator 2 (INTOSC2)
- X1 (XTAL)

7.15 Dual-Clock Comparator (DCC)

The DCC module is used for evaluating and monitoring the clock input based on a second clock, which can be a more accurate and reliable version. This instrumentation is used to detect faults in clock source or clock structures, thereby enhancing the system's safety metrics.

7.15.1 Features

The DCC has the following features:

- Allows the application to ensure that a fixed ratio is maintained between frequencies of two clock signals.
- Supports the definition of a programmable tolerance window in terms of the number of reference clock cycles.
- Supports continuous monitoring without requiring application intervention.
- Supports a single-sequence mode for spot measurements.
- Allows the selection of a clock source for each of the counters, resulting in several specific use cases.

7.15.2 Mapping of DCCx Clock Source Inputs

Table 7-23. DCCx Clock Source0 Table

DCCxCLKSRC0[3:0]	CLOCK NAME
0x0	XTAL/X1
0x1	INTOSC1
0x2	INTOSC2
0x4	TCK
0x5	CPU1.SYSCLK
0x8	AUXCLKIN
0xC	INPUT XBAR (Output16 of input-xbar)
others	Reserved

Copyright © 2022 Texas Instruments Incorporated

Table 7-24. DCCx Clock Source1 Table

DCCxCLKSRC1[4:0]	CLOCK NAME
0x0	PLLRAWCLK
0x2	INTOSC1
0x3	INTOSC2
0x6	CPU1.SYSCLK
0x9	Input XBAR (Output15 of the input-xbar)
0xA	AUXCLKIN
0xB	EPWMCLK
0xC	LSPCLK
0xD	ADCCLK
0xE	WDCLK
0xF	CAN0BITCLK
others	Reserved

Copyright © 2022 Texas Instruments Incorporated

7.16 Configurable Logic Block (CLB)

The C2000 configurable logic block (CLB) is a collection of blocks that can be interconnected using software to implement custom digital logic functions or enhance existing on-chip peripherals. The CLB is able to enhance existing peripherals through a set of crossbar interconnections, which provide a high level of connectivity to existing control peripherals such as enhanced pulse width modulators (ePWM), enhanced capture modules (eCAP), and enhanced quadrature encoder pulse modules (eQEP). The crossbars also allow the CLB to be connected to external GPIO pins. In this way, the CLB can be configured to interact with device peripherals to perform small logical functions such as comparators, or to implement custom serial data exchange protocols. Through the CLB, functions that would otherwise be accomplished using external logic devices can now be implemented inside the MCU.

The CLB peripheral is configured through the CLB tool. For more information on the CLB tool, available examples, application reports and users guide, please refer to the following location in your C2000Ware for C2000 MCUs package (C2000Ware_2_00_00_03 and higher):

- **C2000WARE_INSTALL_LOCATION\utilities\clb_tool\clb_syscfg\doc**
- *CLB Tool User's Guide*
- *Designing With the C2000™ Configurable Logic Block (CLB) Application Report*
- *How to Migrate Custom Logic From an FPGA/CPLD to C2000™ Microcontrollers Application Report*

The CLB module and its interconnections are shown in Figure 7-5.

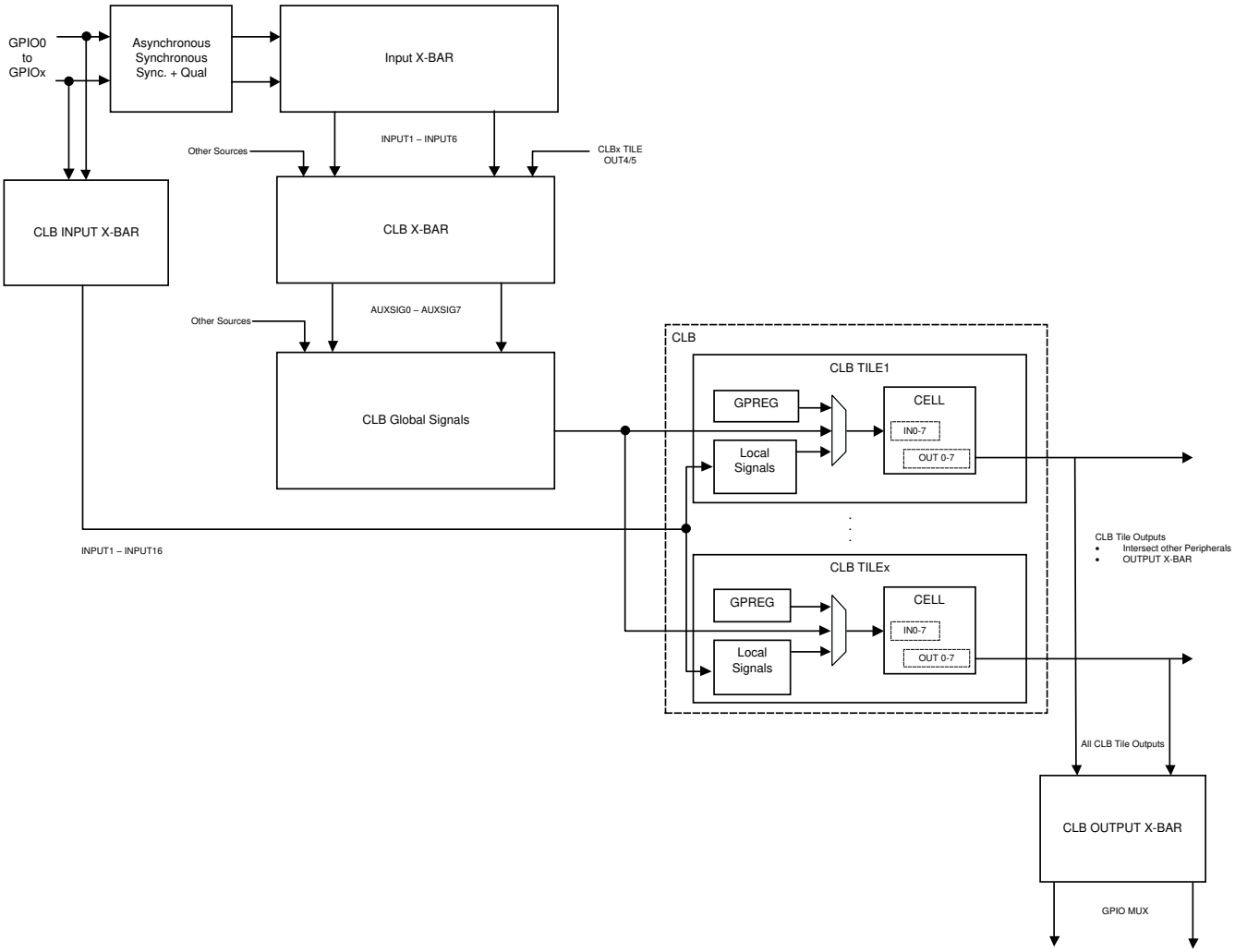

Figure 7-5. GPIO to CLB Tile Connections

Copyright © 2022 Texas Instruments Incorporated

Absolute encoder protocol interfaces are now provided as Position Manager solutions in the C2000Ware MotorControl SDK. Configuration files, application programmer interface (API), and use examples for such solutions are provided with C2000Ware MotorControl SDK. In some solutions, the TI-configured CLB is used with other on-chip resources, such as the SPI port or the C28x CPU, to perform more complex functionality.

Copyright © 2022 Texas Instruments Incorporated

8 Applications, Implementation, and Layout

Note

Information in the following applications sections is not part of the TI component specification, and TI does not warrant its accuracy or completeness. TI's customers are responsible for determining suitability of components for their purposes, as well as validating and testing their design implementation to confirm system functionality.

8.1 TI Reference Design

The TI Reference Design Library is a robust reference design library spanning analog, embedded processor, and connectivity. Created by TI experts to help you jump start your system design, all reference designs include schematic or block diagrams, BOMs, and design files to speed your time to market.

Search and download TI reference designs at Select TI reference designs.

Copyright © 2022 Texas Instruments Incorporated

9 Device and Documentation Support

TI offers an extensive line of development tools. Tools and software to evaluate the performance of the device, generate code, and develop solutions are listed below.

9.1 Getting Started and Next Steps

The *Getting Started With C2000™ Real-Time Control Microcontrollers (MCUs) Getting Started Guide* covers all aspects of development with C2000 devices from hardware to support resources. In addition to key reference documents, each section provides relevant links and resources to further expand on the information covered.

For a quick overview of the device, features, comparisons to other devices, and package details, see New Product Update: C2000™ real-time MCU family: F28003x overview.

9.2 Device Nomenclature

To designate the stages in the product development cycle, TI assigns prefixes to the part numbers of all TMS320 MCU devices and support tools. Each TMS320™ MCU commercial family member has one of three prefixes: TMX, TMP, or TMS (for example, **TMS**320F280039C). Texas Instruments recommends two of three possible prefix designators for its support tools: TMDX and TMDS. These prefixes represent evolutionary stages of product development from engineering prototypes (with TMX for devices and TMDX for tools) through fully qualified production devices and tools (with TMS for devices and TMDS for tools).

Device development evolutionary flow:

TMX Experimental device that is not necessarily representative of the final device's electrical specifications and may not use production assembly flow.

TMP Prototype device that is not necessarily the final silicon die and may not necessarily meet final electrical specifications.

TMS Production version of the silicon die that is fully qualified.

Support tool development evolutionary flow:

TMDX Development-support product that has not yet completed Texas Instruments internal qualification testing.

TMDS Fully-qualified development-support product.

TMX and TMP devices and TMDX development-support tools are shipped against the following disclaimer:

"Developmental product is intended for internal evaluation purposes."

Production devices and TMDS development-support tools have been characterized fully, and the quality and reliability of the device have been demonstrated fully. TI's standard warranty applies.

Predictions show that prototype devices (X or P) have a greater failure rate than the standard production devices. Texas Instruments recommends that these devices not be used in any production system because their expected end-use failure rate still is undefined. Only qualified production devices are to be used.

TI device nomenclature also includes a suffix with the device family name. This suffix indicates the package type (for example, PN) and temperature range (for example, S).

For device part numbers and further ordering information, see the TI website (www.ti.com) or contact your TI sales representative.

Copyright © 2022 Texas Instruments Incorporated

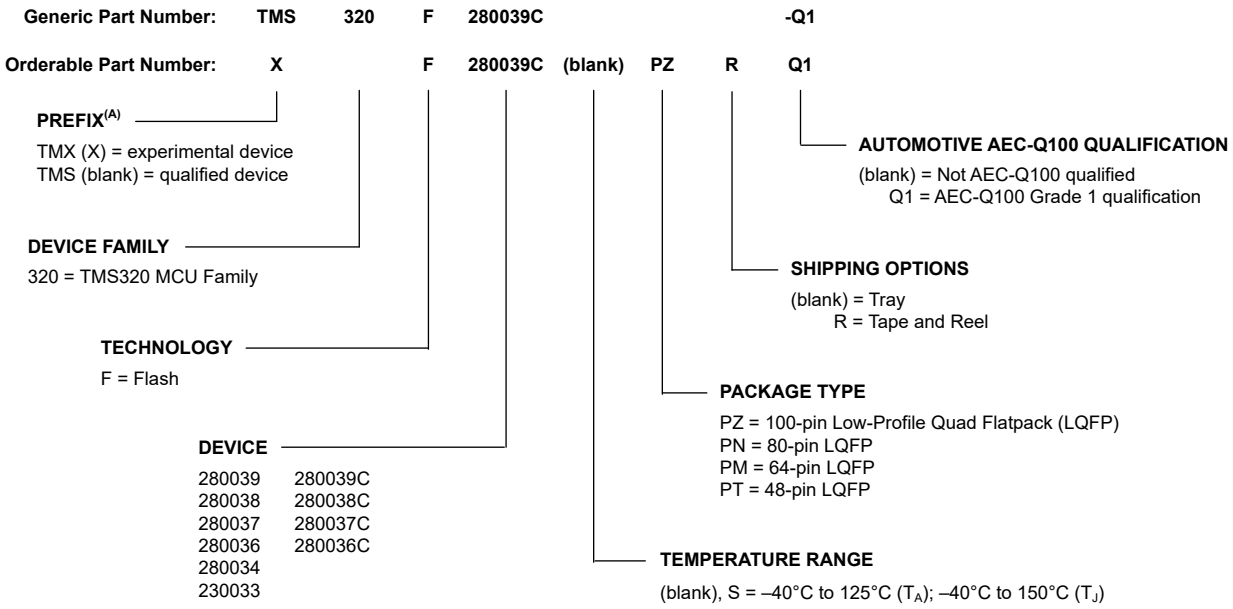

A. Prefix X is used in orderable part numbers.

Figure 9-1. Device Nomenclature

9.3 Markings

Figure 9-2, Figure 9-3, Figure 9-4, and Figure 9-5 show the package symbolization. Table 9-1 lists the silicon revision codes.

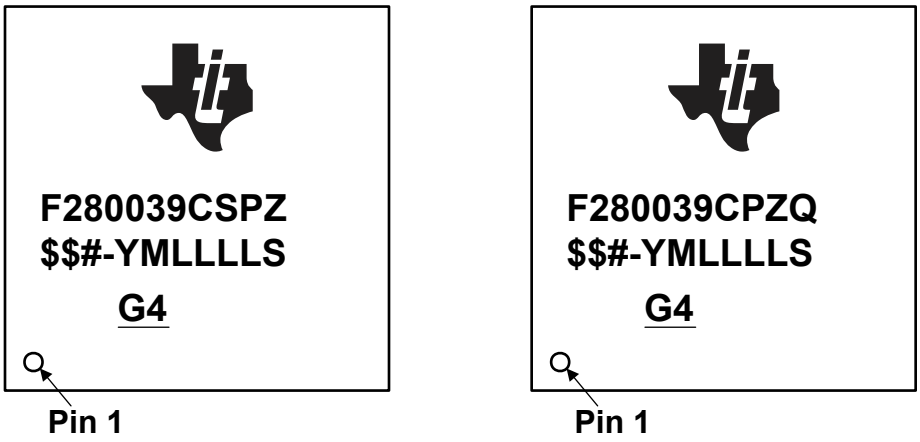

$$ = Wafer Fab Code (one or two characters)
 # = Silicon Revision Code
YM = 2-digit Year/Month Code
LLLL = Assembly Lot Code
S = Assembly Site Code per QSS 005-120

G4 = ECAT

Figure 9-2. Package Symbolization for PZ Package

Copyright © 2022 Texas Instruments Incorporated

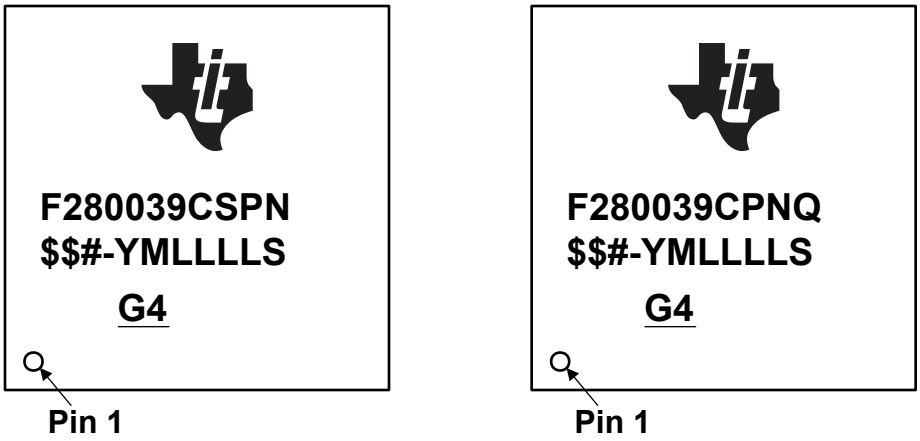

$$ = Wafer Fab Code (one or two characters)
# = Silicon Revision Code
YM = 2-digit Year/Month Code
LLLL = Assembly Lot Code
S = Assembly Site Code per QSS 005-120

G4 = ECAT

Figure 9-3. Package Symbolization for PN Package

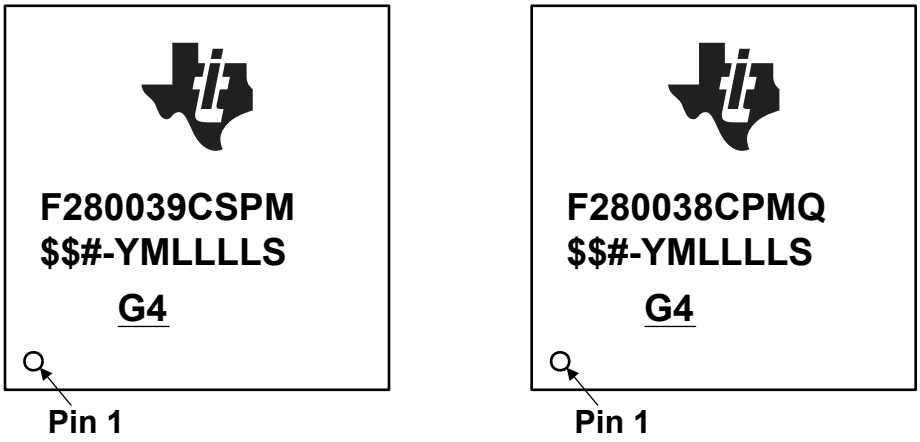

$$ = Wafer Fab Code (one or two characters)
# = Silicon Revision Code
YM = 2-digit Year/Month Code
LLLL = Assembly Lot Code
S = Assembly Site Code per QSS 005-120

G4 = ECAT

Figure 9-4. Package Symbolization for PM Package

Copyright © 2022 Texas Instruments Incorporated

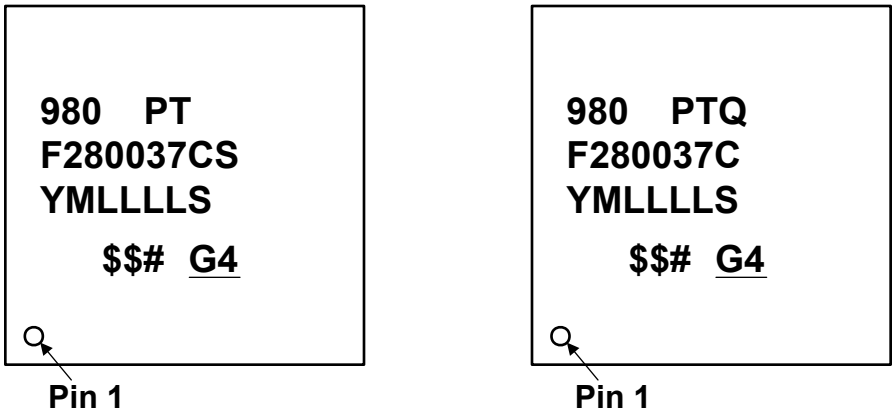

980 = TI EIA Code
YM = 2-digit Year/Month Code
LLLL = Assembly Lot Code
S = Assembly Site Code per QSS 005-120
$$ = Wafer Fab Code (one or two characters)
= Silicon Revision Code

G4 = ECAT

Figure 9-5. Package Symbolization for PT Package

Table 9-1. Revision Identification

SILICON REVISION CODE	SILICON REVISION	REVID(1) ADDRESS: 0x5D00C	COMMENTS
Blank	0	0x0000 0000	This silicon revision is available as TMX and TMS.

(1) Silicon Revision ID

9.4 Tools and Software

TI offers an extensive line of development tools. Some of the tools and software to evaluate the performance of the device, generate code, and develop solutions follow. To view all available tools and software for C2000™ real-time control MCUs, visit the C2000 real-time control MCUs – Design & development page.

Development Tools

TMDSCNCD280039C Control Card
The F280039C controlCARD is an HSEC180 controlCARD based evaluation and development tool for the C2000™ F28003x series of microcontroller products. controlCARDs are ideal to use for initial evaluation and system prototyping. controlCARDs are complete board-level modules that utilize one of two standard form factors (100-pin DIMM or 180-pin HSEC) to provide a low-profile single-board controller solution. For first evaluation controlCARDs are typically purchased bundled with a baseboard or bundled in an application kit.

HSEC180 controlCARD Baseboard Docking Station
TMDSHSECDOCK is a baseboard that provides header pin access to key signals on compatible HSEC180-based controlCARDs. A breadboard area is available for rapid prototyping. Board power can be provided by the provided USB cable or a 5-V barrel supply.

Copyright © 2022 Texas Instruments Incorporated

XDS110 JTAG Debug Probe

The Texas Instruments XDS110 is a new class of debug probe (emulator) for TI embedded processors. The XDS110 replaces the XDS100 family while supporting a wider variety of standards (IEEE1149.1, IEEE1149.7, SWD) in a single pod. Also, all XDS debug probes support Core and System Trace in all Arm® and DSP processors that feature an Embedded Trace Buffer (ETB). For Core Trace over pins the XDS560v2 PRO TRACE Receiver & Debug Probe is required.

XDS200 USB Debug Probe

The XDS200 is a debug probe (emulator) used for debugging TI embedded devices. The XDS200 features a balance of low cost with good performance as compared to the low cost XDS110 and the high performance XDS560v2. It supports a wide variety of standards (IEEE1149.1, IEEE1149.7, SWD) in a single pod. All XDS debug probes support Core and System Trace in all Arm® and DSP processors that feature an Embedded Trace Buffer (ETB). For Core Trace over pins the XDS560v2 PRO TRACE Receiver & Debug Probe is required.

XDS560v2 System Trace USB Debug Probe

The XDS560v2 is the highest performance of the XDS family of debug probes and supports both the traditional JTAG standard (IEEE1149.1) and cJTAG (IEEE1149.7). Note that it does not support serial wire debug (SWD).

Software Tools

C2000™ Software Guide

C2000™ real-time controllers are a portfolio of high-performance microcontrollers that are purpose-built to control power electronics and provide advanced digital signal processing for industrial and automotive applications. Software components to program various modules in C2000 MCUs are released as part of C2000 software releases. This guide provides an overview of various software components and available functionality.

C2000Ware for C2000 MCUs

C2000Ware for C2000™ MCUs is a cohesive set of software and documentation created to minimize development time. It includes device-specific drivers, libraries, and peripheral examples.

Digital Power SDK

Digital Power SDK is a cohesive set of software infrastructure, tools, and documentation designed to minimize C2000 MCU-based digital power system development time targeted for various AC-DC, DC-DC and DC-AC power supply applications. The software includes firmware that runs on C2000 digital power evaluation modules (EVMs) and reference designs, which are targeted for solar, telecom, server, electric vehicle chargers and industrial power delivery applications. Digital Power SDK provides all the needed resources at every stage of development and evaluation in a digital power applications.

Motor Control SDK

Motor Control SDK is a cohesive set of software infrastructure, tools, and documentation designed to minimize C2000 MCU-based motor control system development time targeted for various three-phase motor control applications. The software includes firmware that runs on C2000 motor control evaluation modules (EVMs) and reference designs, which are targeted for industrial drive and other motor control, Motor Control SDK provides all the needed resources at every stage of development and evaluation for high-performance motor control applications.

Code Composer Studio™ (CCS) Integrated Development Environment (IDE) for C2000 microcontrollers

Code Composer Studio is an integrated development environment (IDE) that supports TI's Microcontroller and Embedded Processors portfolio. Code Composer Studio comprises a suite of tools used to develop and debug embedded applications. It includes an optimizing C/C++ compiler, source code editor, project build environment, debugger, profiler, and many other features. The intuitive IDE provides a single user interface taking the user through each step of the application development flow. Familiar tools and interfaces allow users to get started faster than ever before. Code Composer Studio combines the advantages of the Eclipse software framework with advanced embedded debug capabilities from TI resulting in a compelling feature-rich development environment for embedded developers.

TI Resource Explorer

To enhance your experience, be sure to check out the TI Resource Explorer to browse examples, libraries, and documentation for your applications.

Copyright © 2022 Texas Instruments Incorporated

SysConfig System configuration tool
SysConfig is a comprehensive collection of graphical utilities for configuring pins, peripherals, radios, subsystems, and other components. SysConfig helps you manage, expose and resolve conflicts visually so that you have more time to create differentiated applications. The tool's output includes C header and code files that can be used with software development kit (SDK) examples or used to configure custom software. The SysConfig tool automatically selects the pinmux settings that satisfy the entered requirements. The SysConfig tool is delivered integrated in CCS, as a standalone installer, or can be used via the dev.ti.com cloud tools portal. For more information about the SysConfig system configuration tool, visit the System configuation tool page.

C2000 Third-party search tool
TI has partnered with multiple companies to offer a wide range of solutions and services for TI C2000 devices. These companies can accelerate your path to production using C2000 devices. Download this search tool to quickly browse third-party details and find the right third-party to meet your needs.

UniFlash Standalone Flash Tool
UniFlash is a standalone tool used to program on-chip flash memory through a GUI, command line, or scripting interface.

C2000 code generation tools - compiler
The TI C2000 C/C++ Compiler and Assembly Language Tools support development of applications for TI C2000 Microcontroller platforms, including the Concerto (F28M3xx), Entry-Performance (280xx), Premium-Performance Floating-Point (283xx), and C2000 Fixed-Point (2823x/280x/281x) Microcontroller devices.

Models

Various models are available for download from the product Design & development pages. These models include I/O Buffer Information Specification (IBIS) Models and Boundary-Scan Description Language (BSDL) Models. To view all available models, visit the Design tools & simulation subsection of the Design & development section of each device product page.

Training

To help assist design engineers in taking full advantage of the C2000 microcontroller features and performance, TI has developed a variety of training resources. Utilizing the online training materials and downloadable hands-on workshops provides an easy means for gaining a complete working knowledge of the C2000 microcontroller family. These training resources have been designed to decrease the learning curve, while reducing development time, and accelerating product time to market. For more information on the various training resources, visit the C2000™ real-time control MCUs – Support & training site. Additionally, the C2000 Academy course provides new users with a way to ramp quickly with C2000 devices and their many features. This is a great entry point for users getting started with C2000, and is available at the C2000 Academy resource explorer page.

9.5 Documentation Support

To receive notification of documentation updates, navigate to the device product folder on ti.com. Click on *Subscribe to updates* to register and receive a weekly digest of any product information that has changed. For change details, review the revision history included in any revised document.

The current documentation that describes the processor, related peripherals, and other technical collateral follows.

Errata

TMS320F28003x Real-Time MCUs Silicon Errata describes known advisories on silicon and provides workarounds.

Technical Reference Manual

TMS320F28003x Real-Time Microcontrollers Technical Reference Manual details the integration, the environment, the functional description, and the programming models for each peripheral and subsystem in the F28003x real-time microcontrollers.

Copyright © 2022 Texas Instruments Incorporated

CPU User's Guides

TMS320C28x CPU and Instruction Set Reference Guide describes the central processing unit (CPU) and the assembly language instructions of the TMS320C28x fixed-point digital signal processors (DSPs). This Reference Guide also describes emulation features available on these DSPs.

TMS320C28x Extended Instruction Sets Technical Reference Manual describes the architecture, pipeline, and instruction set of the TMU, VCU-II, and FPU accelerators.

Peripheral Guides

C2000 Real-Time Control Peripherals Reference Guide describes the peripheral reference guides of the 28x DSPs.

Tools Guides

TMS320C28x Assembly Language Tools v21.12.0.STS User's Guide describes the assembly language tools (assembler and other tools used to develop assembly language code), assembler directives, macros, common object file format, and symbolic debugging directives for the TMS320C28x device.

TMS320C28x Optimizing C/C++ Compiler v21.12.0.STS User's Guide describes the TMS320C28x C/C++ compiler. This compiler accepts ANSI standard C/C++ source code and produces TMS320 DSP assembly language source code for the TMS320C28x device.

Application Reports

The SMT & packaging application notes website lists documentation on TI's surface mount technology (SMT) and application notes on a variety of packaging-related topics.

Semiconductor Packing Methodology describes the packing methodologies employed to prepare semiconductor devices for shipment to end users.

Calculating Useful Lifetimes of Embedded Processors provides a methodology for calculating the useful lifetime of TI embedded processors (EPs) under power when used in electronic systems. It is aimed at general engineers who wish to determine if the reliability of the TI EP meets the end system reliability requirement.

An Introduction to IBIS (I/O Buffer Information Specification) Modeling discusses various aspects of IBIS including its history, advantages, compatibility, model generation flow, data requirements in modeling the input/output structures, and future trends.

Serial Flash Programming of C2000™ Microcontrollers discusses using a flash kernel and ROM loaders for serial programming a device.

Fast Integer Division – A Differentiated Offering From C2000™ Product Family provides an overview of the different division and modulo (remainder) functions and its associated properties.

The Essential Guide for Developing With C2000™ Real-Time Microcontrollers provides a deeper look into the components that differentiate the C2000 Microcontroller Unit (MCU) as it pertains to Real-Time Control Systems.

9.6 Support Resources

TI E2E™ support forums are an engineer's go-to source for fast, verified answers and design help — straight from the experts. Search existing answers or ask your own question to get the quick design help you need.

Linked content is provided "AS IS" by the respective contributors. They do not constitute TI specifications and do not necessarily reflect TI's views; see TI's Terms of Use.

Copyright © 2022 Texas Instruments Incorporated

9.7 Trademarks

C2000™, TMS320C2000™, Code Composer Studio™, TMS320™, and TI E2E™ are trademarks of Texas Instruments.
Bosch® is a registered trademark of Robert Bosch GmbH Corporation.
Arm® is a registered trademark of Arm Limited (or its subsidiaries) in the US and/or elsewhere.
All trademarks are the property of their respective owners.

9.8 Electrostatic Discharge Caution



This integrated circuit can be damaged by ESD. Texas Instruments recommends that all integrated circuits be handled with appropriate precautions. Failure to observe proper handling and installation procedures can cause damage.

ESD damage can range from subtle performance degradation to complete device failure. Precision integrated circuits may be more susceptible to damage because very small parametric changes could cause the device not to meet its published specifications.

9.9 Glossary

TI Glossary	This glossary lists and explains terms, acronyms, and definitions.

Copyright © 2022 Texas Instruments Incorporated

10 Mechanical, Packaging, and Orderable Information

The following pages include mechanical, packaging, and orderable information. This information is the most current data available for the designated devices. This data is subject to change without notice and revision of this document. For browser-based versions of this data sheet, refer to the left-hand navigation.

To learn more about TI packaging, visit the Packaging information website.

Copyright © 2022 Texas Instruments Incorporated

PACKAGING INFORMATION

Orderable Device	Status (1)	Package Type	Package Drawing	Pins	Package Qty	Eco Plan (2)	Lead finish/ Ball material (6)	MSL Peak Temp (3)	Op Temp (°C)	Device Marking (4/5)	Samples
F280037CPTQ1	ACTIVE	LQFP	PT	48	250	RoHS & Green	NIPDAU	Level-3-260C-168 HR	-40 to 125	F280037C PTQ	Samples
F280037CPTRQ1	ACTIVE	LQFP	PT	48	1000	RoHS & Green	NIPDAU	Level-3-260C-168 HR	-40 to 125	F280037C PTQ	Samples
F280037CSPM	ACTIVE	LQFP	PM	64	160	RoHS & Green	NIPDAU	Level-3-260C-168 HR	-40 to 125	F280037CSPM	Samples
F280037CSPN	ACTIVE	LQFP	PN	80	119	RoHS & Green	NIPDAU	Level-3-260C-168 HR	-40 to 125	F280037CSPN	Samples
F280037CSPT	ACTIVE	LQFP	PT	48	250	RoHS & Green	NIPDAU	Level-3-260C-168 HR	-40 to 125	F280037CS PT	Samples
F280037SPN	ACTIVE	LQFP	PN	80	119	RoHS & Green	NIPDAU	Level-3-260C-168 HR	-40 to 125	F280037SPN	Samples
F280037SPNR	ACTIVE	LQFP	PN	80	1000	RoHS & Green	NIPDAU	Level-3-260C-168 HR	-40 to 125	F280037SPN	Samples
F280038CPMQ1	ACTIVE	LQFP	PM	64	160	RoHS & Green	NIPDAU	Level-3-260C-168 HR	-40 to 125	F280038CPMQ	Samples
F280038CPMRQ1	ACTIVE	LQFP	PM	64	1000	RoHS & Green	NIPDAU	Level-3-260C-168 HR	-40 to 125	F280038CPMQ	Samples
F280039CPZQ1	ACTIVE	LQFP	PZ	100	90	RoHS & Green	NIPDAU	Level-3-260C-168 HR	-40 to 125	F280039CPZQ	Samples
F280039CPZRQ1	ACTIVE	LQFP	PZ	100	1000	RoHS & Green	NIPDAU	Level-3-260C-168 HR	-40 to 125	F280039CPZQ	Samples
F280039CSPM	ACTIVE	LQFP	PM	64	160	RoHS & Green	NIPDAU	Level-3-260C-168 HR	-40 to 125	F280039CSPM	Samples
F280039CSPN	ACTIVE	LQFP	PN	80	119	RoHS & Green	NIPDAU	Level-3-260C-168 HR	-40 to 125	F280039CSPN	Samples
F280039CSPZ	ACTIVE	LQFP	PZ	100	90	RoHS & Green	NIPDAU	Level-3-260C-168 HR	-40 to 125	F280039CSPZ	Samples
XF280037CSPT	ACTIVE	LQFP	PT	48	90	TBD	Call TI	Call TI	-40 to 125		Samples
XF280039CSPM	ACTIVE	LQFP	PM	64	90	TBD	Call TI	Call TI	-40 to 125		Samples
XF280039CSPN	ACTIVE	LQFP	PN	80	119	TBD	Call TI	Call TI	-40 to 125		Samples
XF280039CSPZ	ACTIVE	LQFP	PZ	100	90	TBD	Call TI	Call TI	-40 to 125		Samples

(1) The marketing status values are defined as follows:
ACTIVE: Product device recommended for new designs.

LIFEBUY: TI has announced that the device will be discontinued, and a lifetime-buy period is in effect.
NRND: Not recommended for new designs. Device is in production to support existing customers, but TI does not recommend using this part in a new design.
PREVIEW: Device has been announced but is not in production. Samples may or may not be available.
OBSOLETE: TI has discontinued the production of the device.

(2) **RoHS:** TI defines "RoHS" to mean semiconductor products that are compliant with the current EU RoHS requirements for all 10 RoHS substances, including the requirement that RoHS substance do not exceed 0.1% by weight in homogeneous materials. Where designed to be soldered at high temperatures, "RoHS" products are suitable for use in specified lead-free processes. TI may reference these types of products as "Pb-Free".
RoHS Exempt: TI defines "RoHS Exempt" to mean products that contain lead but are compliant with EU RoHS pursuant to a specific EU RoHS exemption.
Green: TI defines "Green" to mean the content of Chlorine (Cl) and Bromine (Br) based flame retardants meet JS709B low halogen requirements of <=1000ppm threshold. Antimony trioxide based flame retardants must also meet the <=1000ppm threshold requirement.

(3) MSL, Peak Temp. - The Moisture Sensitivity Level rating according to the JEDEC industry standard classifications, and peak solder temperature.

(4) There may be additional marking, which relates to the logo, the lot trace code information, or the environmental category on the device.

(5) Multiple Device Markings will be inside parentheses. Only one Device Marking contained in parentheses and separated by a "~" will appear on a device. If a line is indented then it is a continuation of the previous line and the two combined represent the entire Device Marking for that device.

(6) Lead finish/Ball material - Orderable Devices may have multiple material finish options. Finish options are separated by a vertical ruled line. Lead finish/Ball material values may wrap to two lines if the finish value exceeds the maximum column width.

Important Information and Disclaimer: The information provided on this page represents TI's knowledge and belief as of the date that it is provided. TI bases its knowledge and belief on information provided by third parties, and makes no representation or warranty as to the accuracy of such information. Efforts are underway to better integrate information from third parties. TI has taken and continues to take reasonable steps to provide representative and accurate information but may not have conducted destructive testing or chemical analysis on incoming materials and chemicals. TI and TI suppliers consider certain information to be proprietary, and thus CAS numbers and other limited information may not be available for release.

In no event shall TI's liability arising out of such information exceed the total purchase price of the TI part(s) at issue in this document sold by TI to Customer on an annual basis.

OTHER QUALIFIED VERSIONS OF TMS320F280037C, TMS320F280037C-Q1, TMS320F280039C, TMS320F280039C-Q1 :

- Catalog : TMS320F280037C, TMS320F280039C
- Automotive : TMS320F280037C-Q1, TMS320F280039C-Q1

NOTE: Qualified Version Definitions:

- Catalog - TI's standard catalog product

- Automotive - Q100 devices qualified for high-reliability automotive applications targeting zero defects

TAPE AND REEL INFORMATION

REEL DIMENSIONS

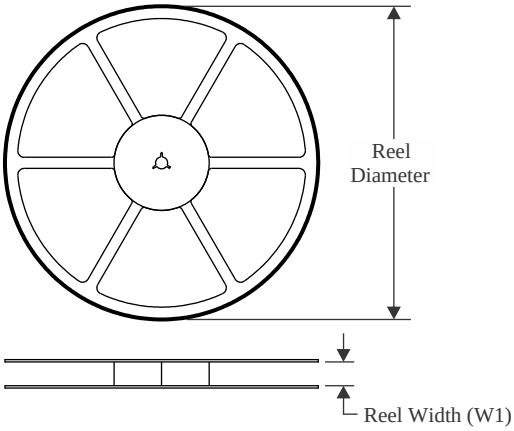

TAPE DIMENSIONS

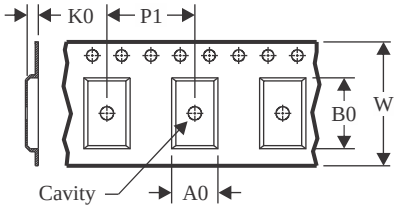

A0	Dimension designed to accommodate the component width
B0	Dimension designed to accommodate the component length
K0	Dimension designed to accommodate the component thickness
W	Overall width of the carrier tape
P1	Pitch between successive cavity centers

QUADRANT ASSIGNMENTS FOR PIN 1 ORIENTATION IN TAPE

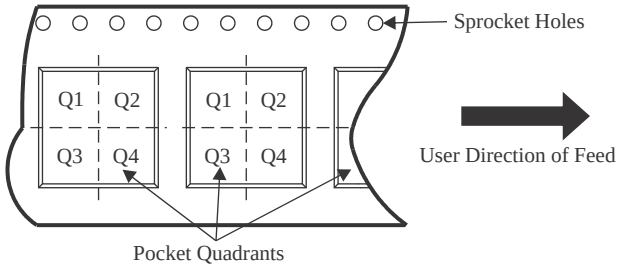

*All dimensions are nominal

Device	Package Type	Package Drawing	Pins	SPQ	Reel Diameter (mm)	Reel Width W1 (mm)	A0 (mm)	B0 (mm)	K0 (mm)	P1 (mm)	W (mm)	Pin1 Quadrant
F280038CPMRQ1	LQFP	PM	64	1000	330.0	24.4	13.0	13.0	2.1	16.0	24.0	Q2
F280039CPZRQ1	LQFP	PZ	100	1000	330.0	32.4	16.9	16.9	2.0	24.0	32.0	Q2

TAPE AND REEL BOX DIMENSIONS

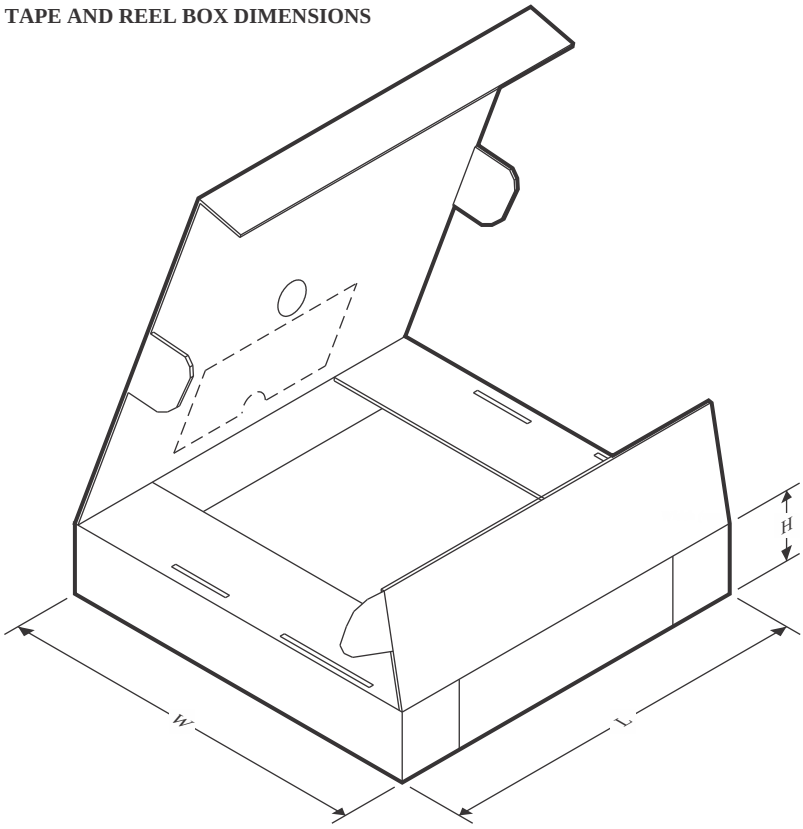

*All dimensions are nominal

Device	Package Type	Package Drawing	Pins	SPQ	Length (mm)	Width (mm)	Height (mm)
F280038CPMRQ1	LQFP	PM	64	1000	336.6	336.6	41.3
F280039CPZRQ1	LQFP	PZ	100	1000	367.0	367.0	55.0

TRAY

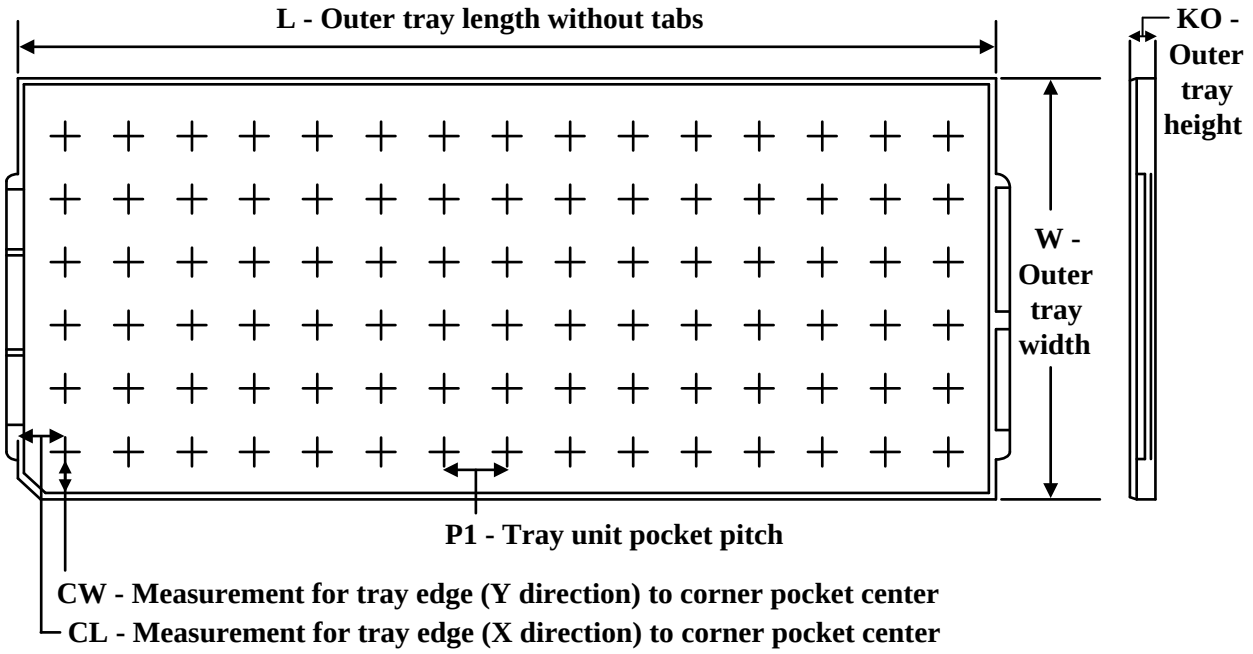

Chamfer on Tray corner indicates Pin 1 orientation of packed units.

*All dimensions are nominal

Device	Package Name	Package Type	Pins	SPQ	Unit array matrix	Max temperature (°C)	L (mm)	W (mm)	K0 (µm)	P1 (mm)	CL (mm)	CW (mm)
F280037CPTQ1	PT	LQFP	48	250	10 x 25	150	315	135.9	7620	12.2	11.1	11.25
F280037CSPM	PM	LQFP	64	160	8 X 20	150	315	135.9	7620	15.2	13.1	13
F280037CSPN	PN	LQFP	80	119	7 X 17	150	315	135.9	7620	17.9	14.3	13.95
F280037CSPT	PT	LQFP	48	250	10 x 25	150	315	135.9	7620	12.2	11.1	11.25
F280037SPN	PN	LQFP	80	119	7 X 17	150	315	135.9	7620	17.9	14.3	13.95
F280038CPMQ1	PM	LQFP	64	160	8 X 20	150	315	135.9	7620	15.2	13.1	13
F280039CPZQ1	PZ	LQFP	100	90	6 x 15	150	315	135.9	7620	20.3	15.4	15.4
F280039CSPM	PM	LQFP	64	160	8 X 20	150	315	135.9	7620	15.2	13.1	13
F280039CSPN	PN	LQFP	80	119	7 X 17	150	315	135.9	7620	17.9	14.3	13.95

PACKAGE OUTLINE

PT0048A

LQFP - 1.6 mm max height

LOW PROFILE QUAD FLATPACK

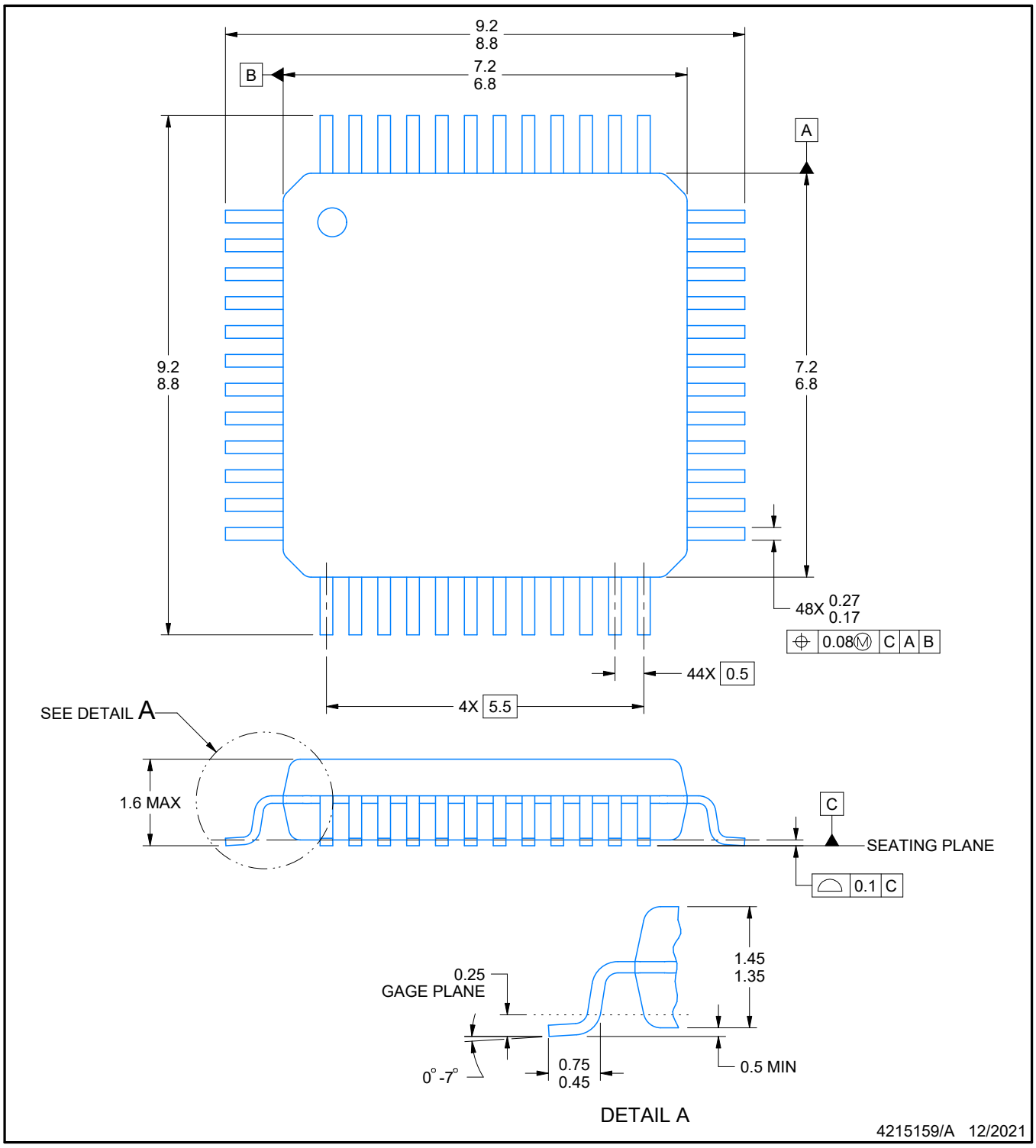

NOTES:

1. All linear dimensions are in millimeters. Any dimensions in parenthesis are for reference only. Dimensioning and tolerancing per ASME Y14.5M.
2. This drawing is subject to change without notice.
3. Reference JEDEC registration MS-026.
4. This may also be a thermally enhanced plastic package with leads conected to the die pads.

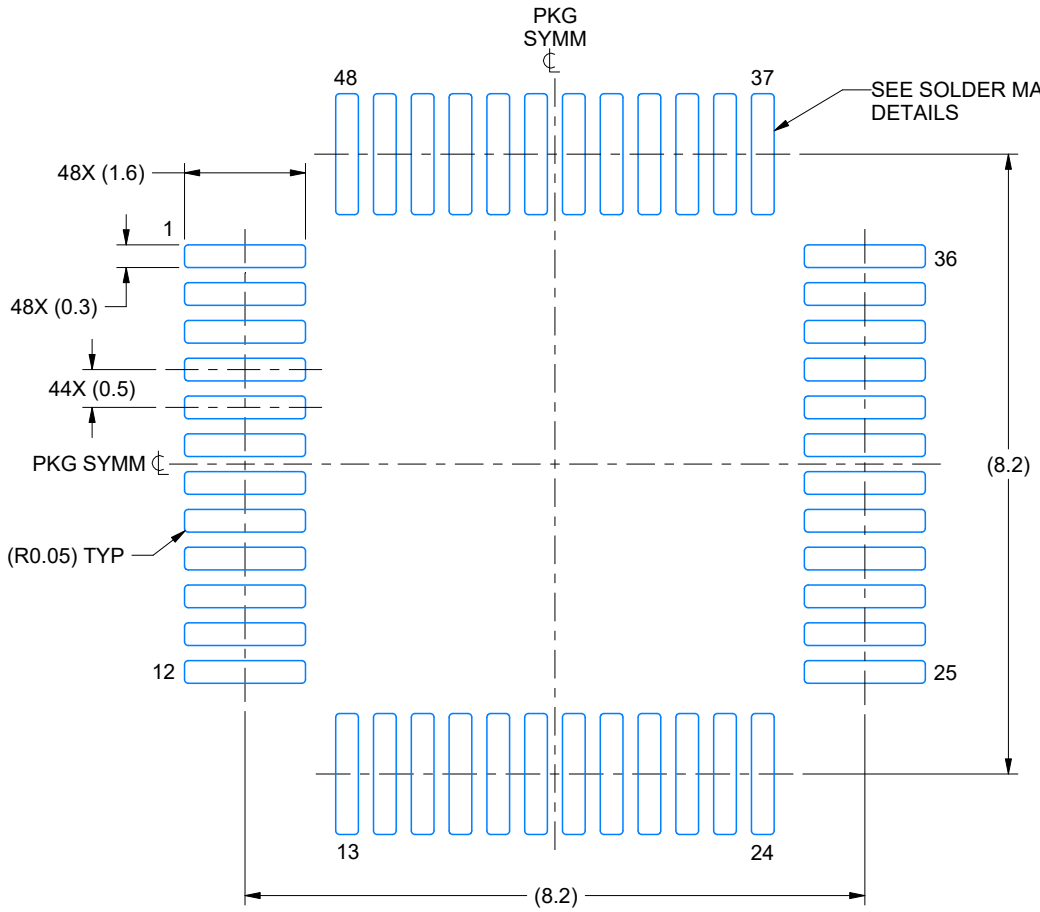

LAND PATTERN EXAMPLE
EXPOSED METAL SHOWN
SCALE 10.000

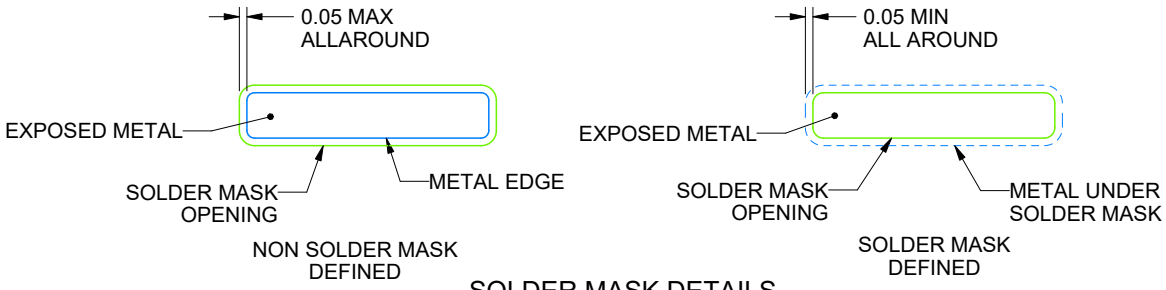

SOLDER MASK DETAILS

4215159/A 12/2021

NOTES: (continued)

5. Publication IPC-7351 may have alternate designs.
6. Solder mask tolerances between and around signal pads can vary based on board fabrication site.

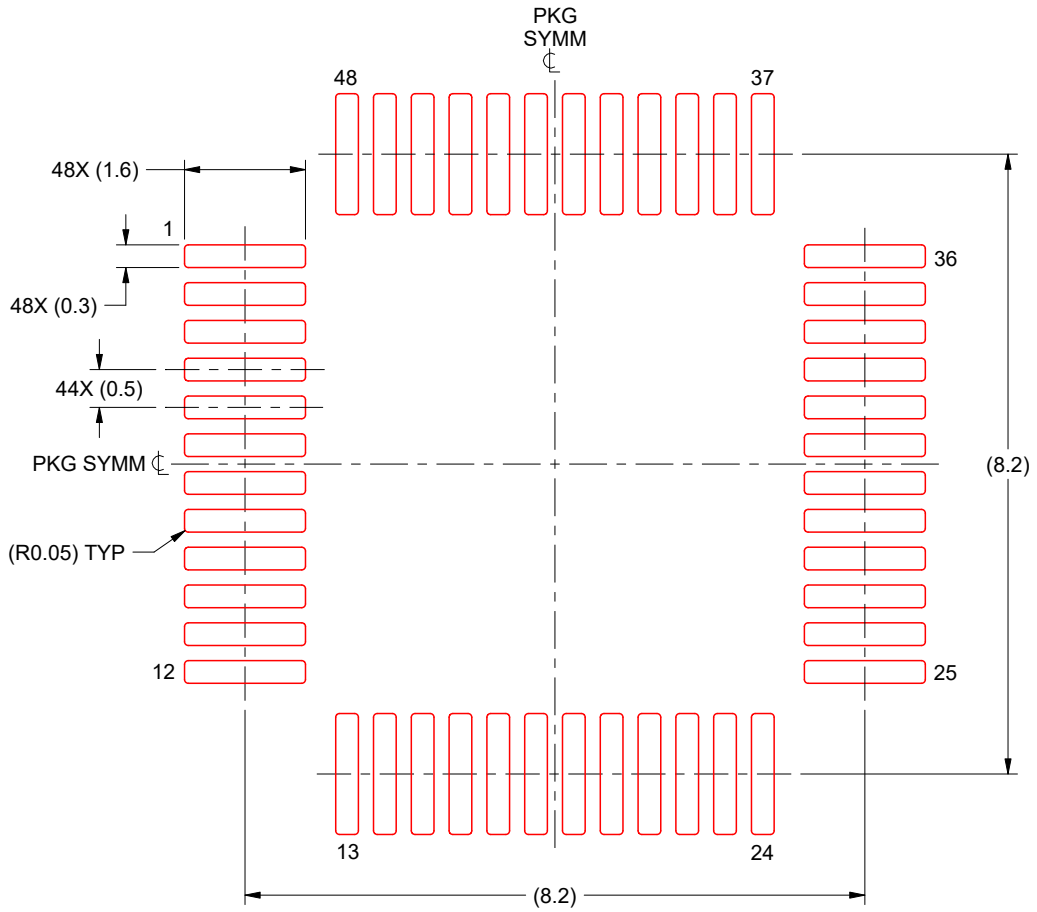

SOLDER PASTE EXAMPLE
BASED ON 0.1 mm THICK STENCIL
SCALE: 10X

4215159/A 12/2021

NOTES: (continued)

7. Laser cutting apertures with trapezoidal walls and rounded corners may offer better paste release. IPC-7525 may have alternate design recommendations.
8. Board assembly site may have different recommendations for stencil design.

PACKAGE OUTLINE

PN0080A

LQFP - 1.6 mm max height

PLASTIC QUAD FLATPACK

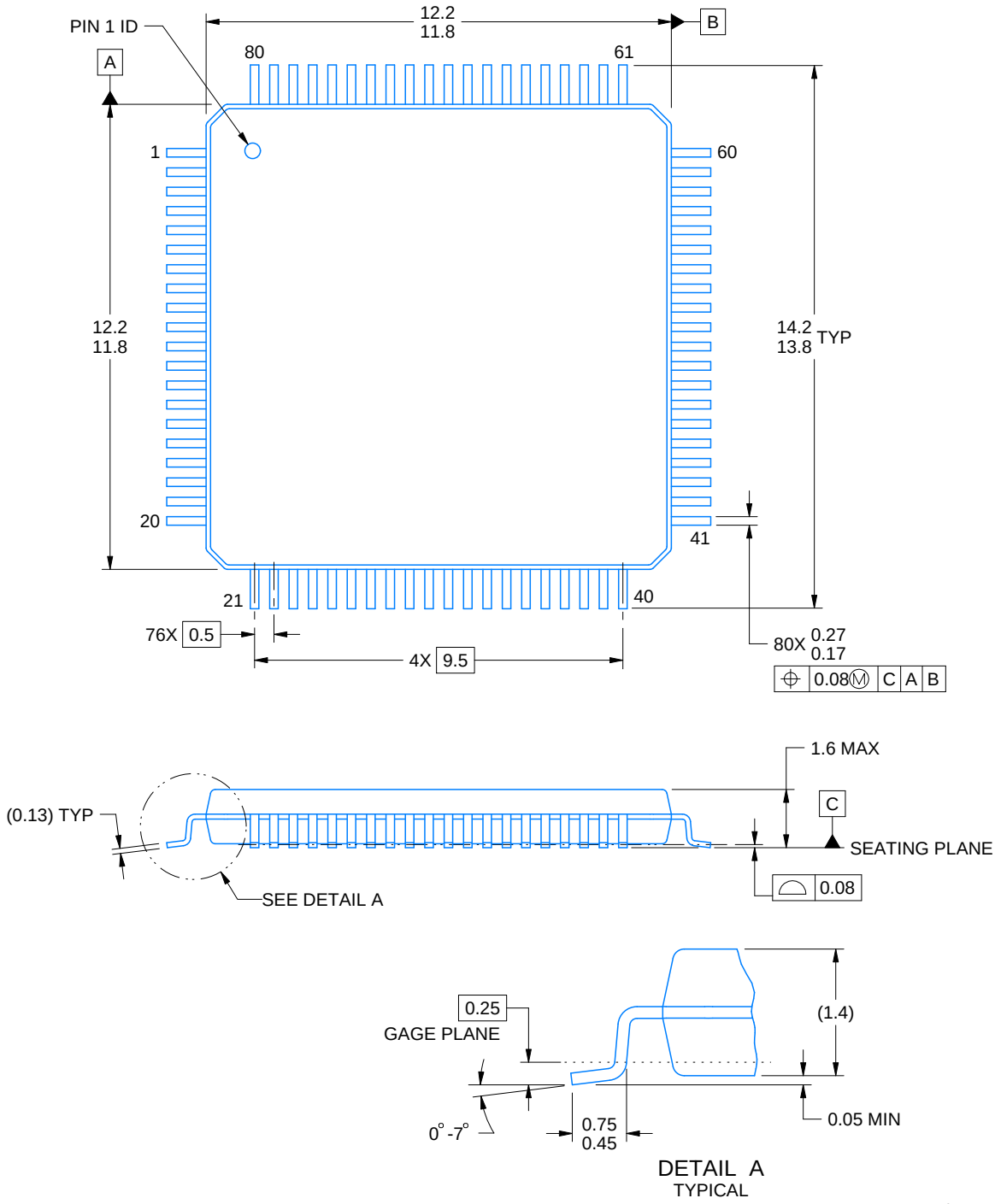

NOTES:

1. All linear dimensions are in millimeters. Any dimensions in parenthesis are for reference only. Dimensioning and tolerancing per ASME Y14.5M.
2. This drawing is subject to change without notice.
3. Reference JEDEC registration MS-026.

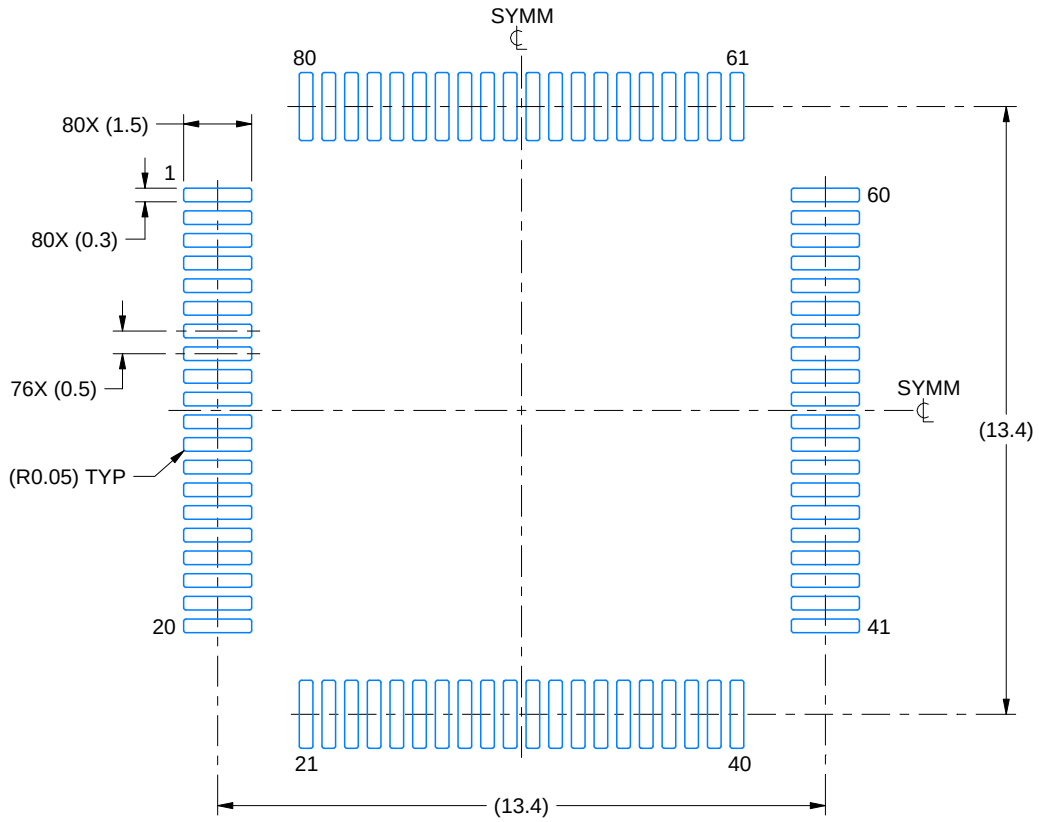

LAND PATTERN EXAMPLE
EXPOSED METAL SHOWN
SCALE:6X

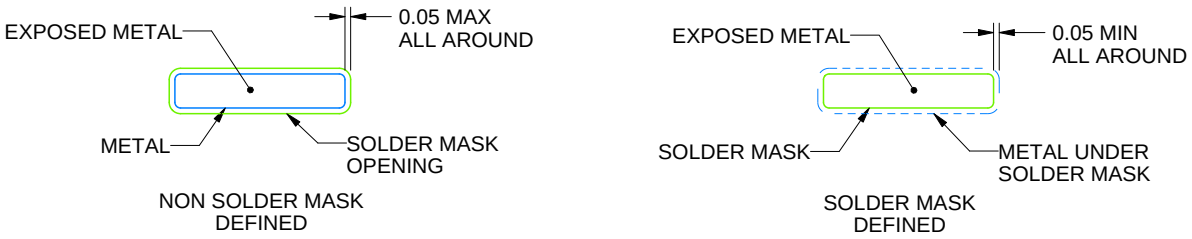

SOLDER MASK DETAILS

4215166/A 08/2022

NOTES: (continued)

4. Publication IPC-7351 may have alternate designs.
5. Solder mask tolerances between and around signal pads can vary based on board fabrication site.
6. For more information, see Texas Instruments literature number SLMA004 (www.ti.com/lit/slma004).

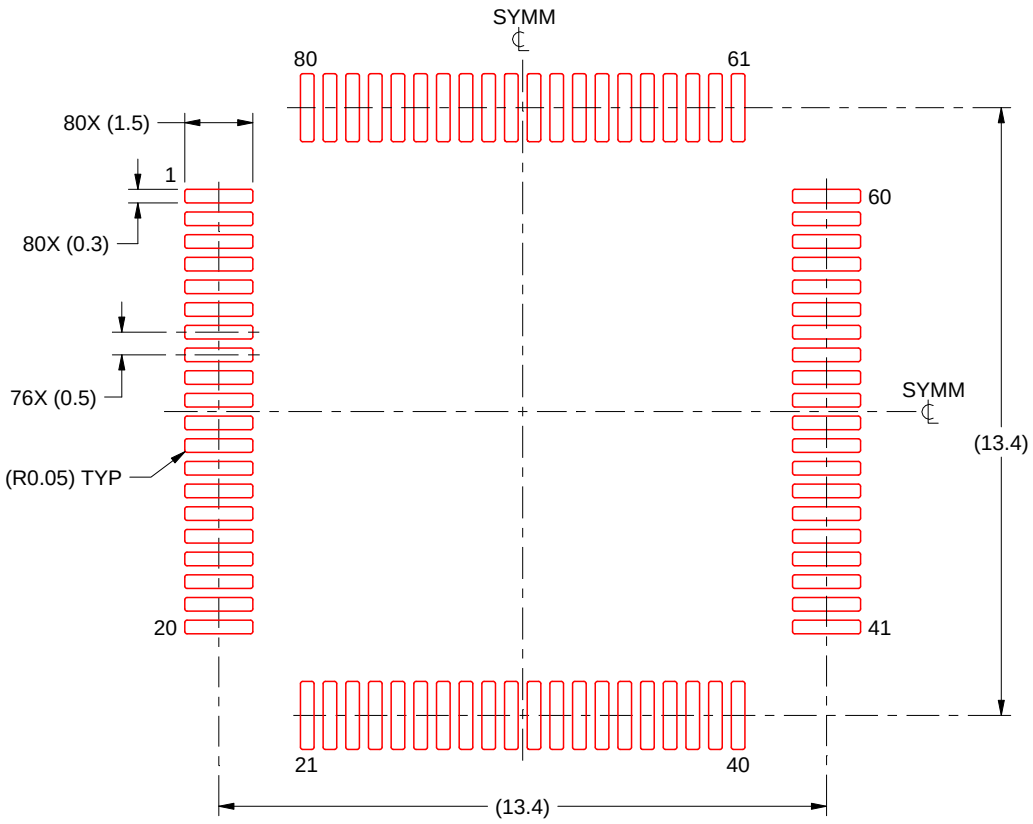

SOLDER PASTE EXAMPLE
BASED ON 0.1 mm THICK STENCIL
SCALE:6X

4215166/A 08/2022

NOTES: (continued)

7. Laser cutting apertures with trapezoidal walls and rounded corners may offer better paste release. IPC-7525 may have alternate design recommendations.
8. Board assembly site may have different recommendations for stencil design.

PACKAGE OUTLINE

PM0064A

LQFP - 1.6 mm max height

PLASTIC QUAD FLATPACK

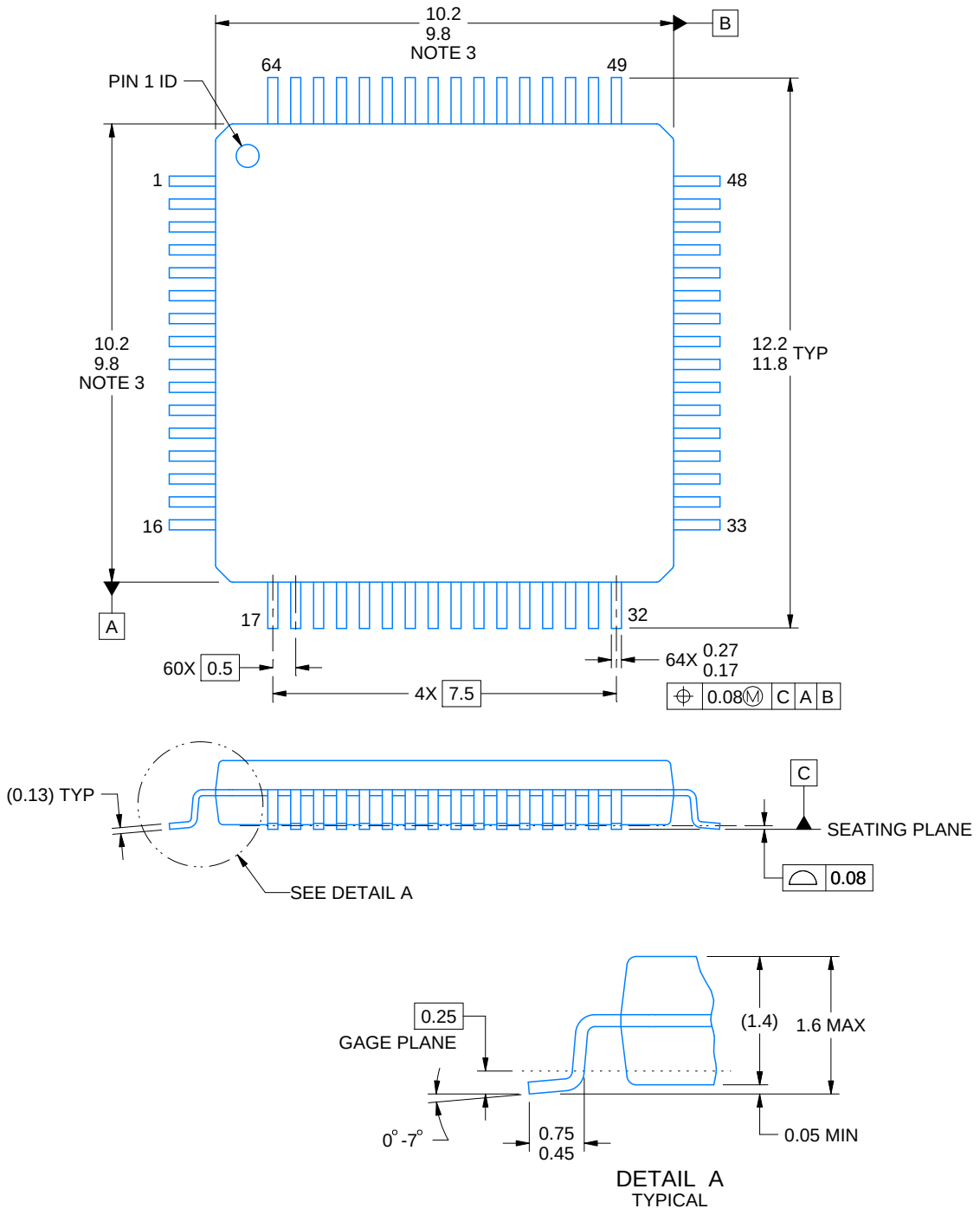

4215162/A 03/2017

NOTES:

1. All linear dimensions are in millimeters. Any dimensions in parenthesis are for reference only. Dimensioning and tolerancing per ASME Y14.5M.
2. This drawing is subject to change without notice.
3. This dimension does not include mold flash, protrusions, or gate burrs. Mold flash, protrusions, or gate burrs shall not exceed 0.15 mm per side.
4. Reference JEDEC registration MS-026.

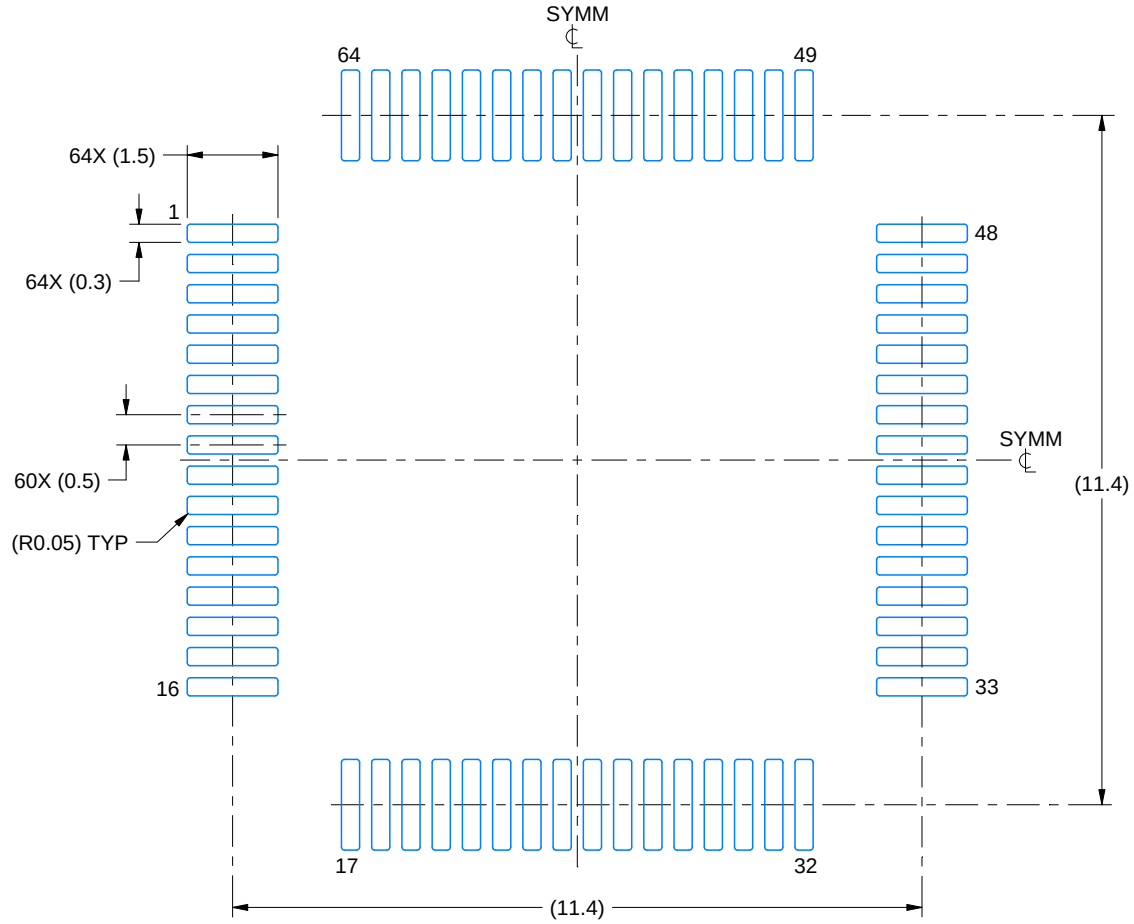

LAND PATTERN EXAMPLE
EXPOSED METAL SHOWN
SCALE:8X

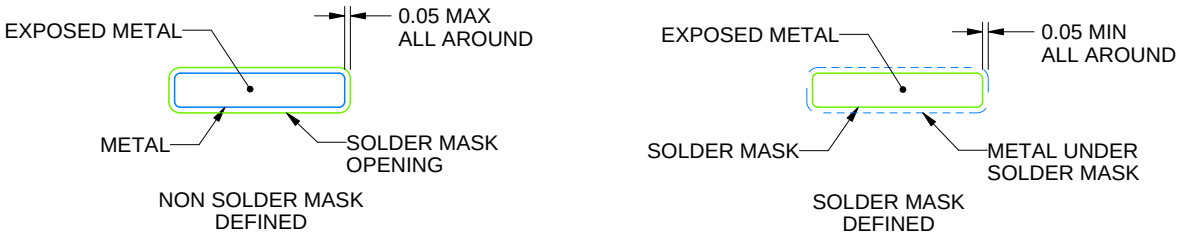

SOLDER MASK DETAILS

4215162/A 03/2017

NOTES: (continued)

5. Publication IPC-7351 may have alternate designs.
6. Solder mask tolerances between and around signal pads can vary based on board fabrication site.
7. For more information, see Texas Instruments literature number SLMA004 (www.ti.com/lit/slma004).

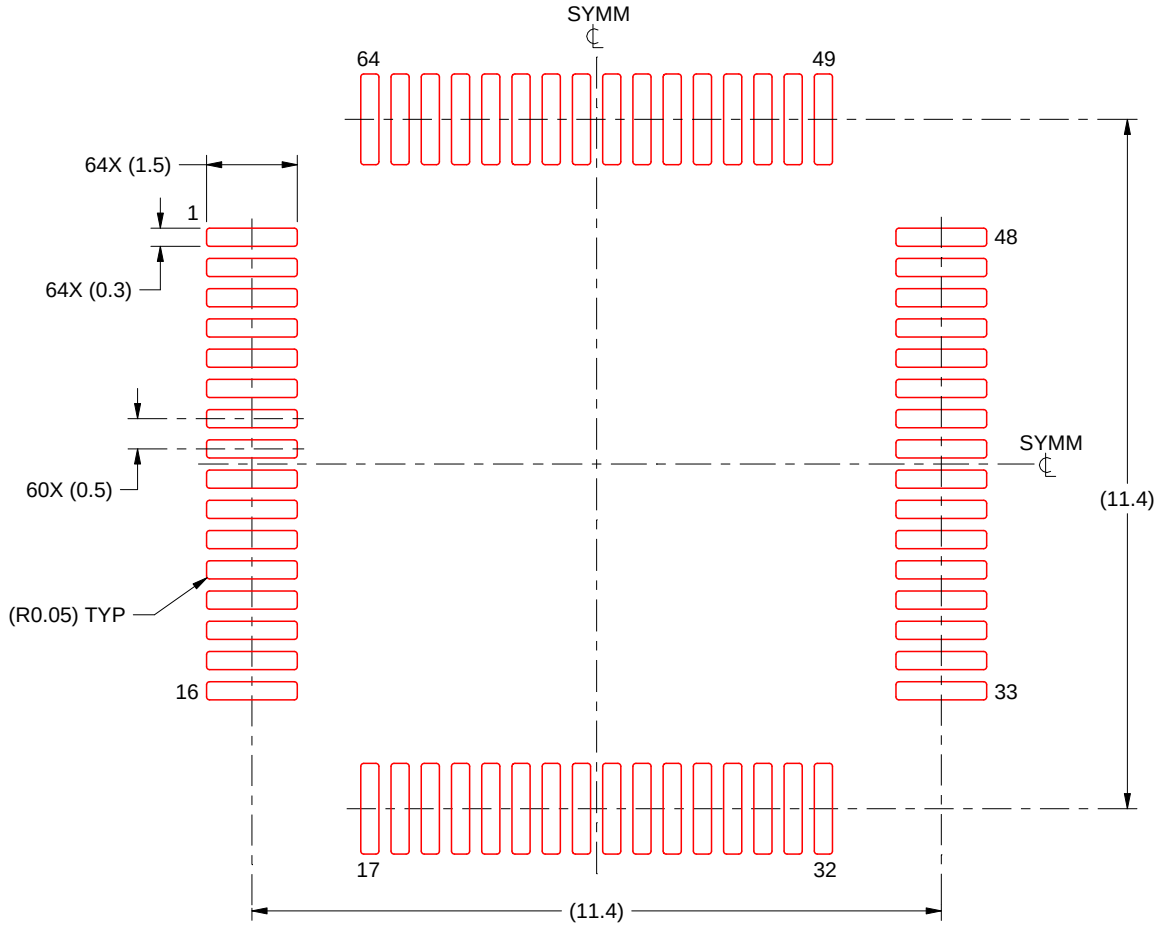

SOLDER PASTE EXAMPLE
BASED ON 0.125 mm THICK STENCIL
SCALE:8X

4215162/A 03/2017

NOTES: (continued)

8. Laser cutting apertures with trapezoidal walls and rounded corners may offer better paste release. IPC-7525 may have alternate design recommendations.
9. Board assembly site may have different recommendations for stencil design.

MTQF013A – OCTOBER 1994 – REVISED DECEMBER 1996

PZ (S-PQFP-G100) **PLASTIC QUAD FLATPACK**

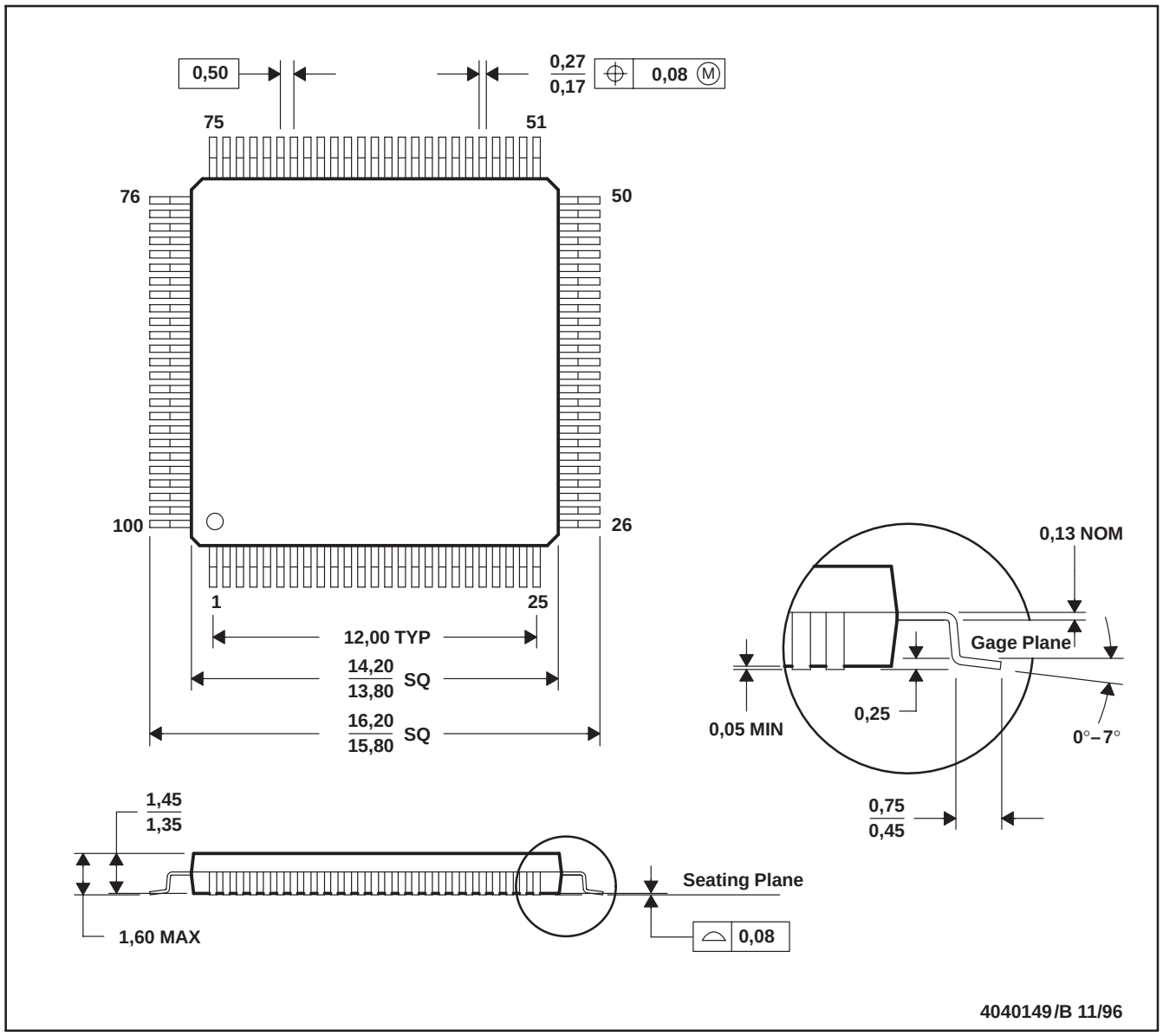

NOTES: A. All linear dimensions are in millimeters.
B. This drawing is subject to change without notice.
C. Falls within JEDEC MS-026

PZ (S–PQFP–G100) PLASTIC QUAD FLAT PACK

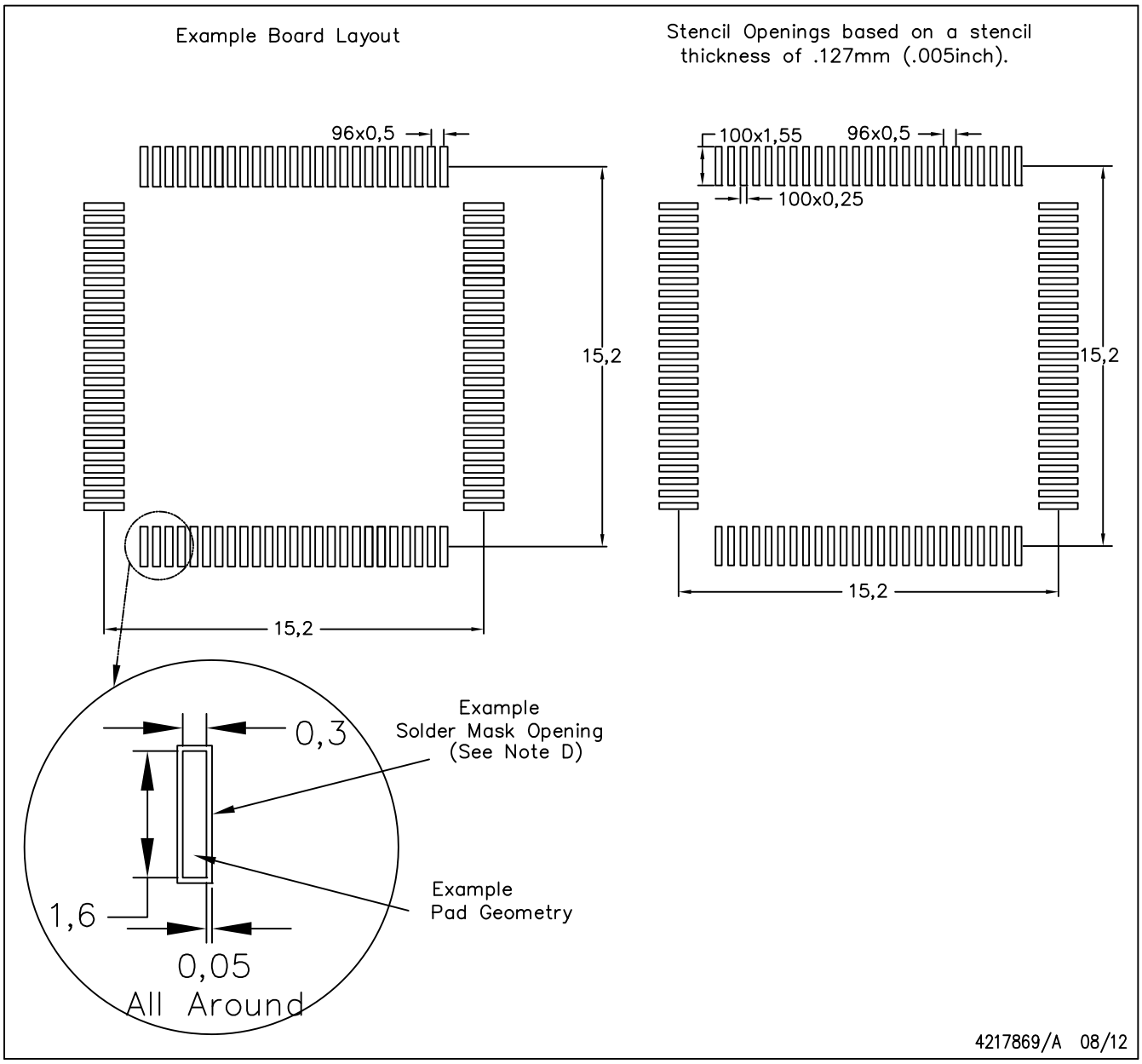

NOTES:

A. All linear dimensions are in millimeters.
B. This drawing is subject to change without notice.
C. Laser cutting apertures with trapezoidal walls and also rounding corners will offer better paste release. Customers should contact their board assembly site for stencil design recommendations. Example stencil design based on a 50% volumetric metal load solder paste. Refer to IPC–7525 for other stencil recommendations.
D. Customers should contact their board fabrication site for solder mask tolerances between and around signal pads.

IMPORTANT NOTICE AND DISCLAIMER

TI PROVIDES TECHNICAL AND RELIABILITY DATA (INCLUDING DATA SHEETS), DESIGN RESOURCES (INCLUDING REFERENCE DESIGNS), APPLICATION OR OTHER DESIGN ADVICE, WEB TOOLS, SAFETY INFORMATION, AND OTHER RESOURCES “AS IS” AND WITH ALL FAULTS, AND DISCLAIMS ALL WARRANTIES, EXPRESS AND IMPLIED, INCLUDING WITHOUT LIMITATION ANY IMPLIED WARRANTIES OF MERCHANTABILITY, FITNESS FOR A PARTICULAR PURPOSE OR NON-INFRINGEMENT OF THIRD PARTY INTELLECTUAL PROPERTY RIGHTS.

These resources are intended for skilled developers designing with TI products. You are solely responsible for (1) selecting the appropriate TI products for your application, (2) designing, validating and testing your application, and (3) ensuring your application meets applicable standards, and any other safety, security, regulatory or other requirements.

These resources are subject to change without notice. TI grants you permission to use these resources only for development of an application that uses the TI products described in the resource. Other reproduction and display of these resources is prohibited. No license is granted to any other TI intellectual property right or to any third party intellectual property right. TI disclaims responsibility for, and you will fully indemnify TI and its representatives against, any claims, damages, costs, losses, and liabilities arising out of your use of these resources.

TI’s products are provided subject to TI’s Terms of Sale or other applicable terms available either on ti.com or provided in conjunction with such TI products. TI’s provision of these resources does not expand or otherwise alter TI’s applicable warranties or warranty disclaimers for TI products.

TI objects to and rejects any additional or different terms you may have proposed.

Mailing Address: Texas Instruments, Post Office Box 655303, Dallas, Texas 75265
Copyright © 2022, Texas Instruments Incorporated