TA35 Rotary Switch 1Pol

Circuit Breaker for Equipment thermal, Rotary knob actuation, 1 pole



Standard version

See below:
Approvals and Compliances

Description
- Thermal circuit breaker
- 1-pole
- Supplementary protector for general industrial use
- Positively trip-free release
- Method of operation acc. to IEC: S-type
- Bezel / knob snap-on

Unique Selling Proposition
- Easy actuation with gloves

Applications
- Power tools
- Industrial appliances
- Equipment for construction
- Cleaning equipment
- Commercial and household kitchen appliances

References
Available without bezel/knob for customized front panel design

Weblinks
pdf data sheet, html datasheet, General Product Information, Distributor-Stock-Check, Detailed request for product, Product News

Technical Data

Rated Voltage AC	IEC: 240 VAC
	UL/CSA : 277 VAC
Rated Voltage DC	32 VDC
Rated current range AC	0.05 - 20 A
Conditional short circuit capacity Inc	IEC 60934: 0.05...20 A: 2 kA, SC (C1) @ 240 VAC
Degree of Protection	front side IP40 acc. to IEC 60529
Dielectric Strength	50 Hz: > 2.5 kV Impulse 1.2/50 µs: > 4 kV
Insulation Resistance	500 VDC > 100 MΩ
Lifetime	mechanical 50'000 switching cycles
	AC: 1 x Ir, cos φ 0.6: 50'000 switching cycles
	DC: 1 x Ir,: 50'000 switching cycles

Overload	IEC: min. 40 trips@ 6 x Ir, cos φ 0.6
	UL / CSA: min. 50 trips@ 1.5 x Ir, cos φ 0.75
Allowable Operation Temp.	-30 °C to 60 °C
Storage Temperature	-40 °C to 60 °C
Vibration Resistance	± 0.75 mm @ 10 - 60 Hz acc. to IEC 60068-2-6, test Tc 10 G @ 60 - 500 Hz acc. to IEC 60068-2-6, test Tc
Shock Resistance	30 G / 18 ms acc. to IEC 60068-2-27, test Ea
Tripping Type	Thermal
Actuation Type	Rotary Knob
Weight	45 g

Approvals and Compliances

Detailed information on product approvals, code requirements, usage instructions and detailed test conditions can be looked up in Details about Approvals

SCHURTER products are designed for use in industrial environments. They have approvals from independent testing bodies according to national and international standards. Products with specific characteristics and requirements such as required in the automotive sector according to IATF 16949, medical technology according to ISO 13485 or in the aerospace industry can be offered exclusively with customer-specific, individual agreements by SCHURTER.

Approvals

The approval mark is used by the testing authorities to certify compliance with the safety requirements placed on electronic products.

Approval Reference Type: TA35

Approval Logo	Certificates	Certification Body	Description
	VDE Approvals	VDE	VDE Certificate Number: 40019754
	UL Approvals	UL	UR File Number: E71572
	CCC Approvals	CCC	CCC Certificate Number: 2020970307001846

Product standards

Product standards that are referenced

Organization	Design	Standard	Description
IEC	Designed according to	IEC 60934	Circuit-breakers for equipment (CBE)
UL	Designed according to	UL 1077	Standard for Supplementary Protectors for Use in Electrical Equipment
CSA Group	Designed according to	CSA C22.2 No. 235	Supplementary Protectors
CCC	Designed according to	GB 17701	Circuit-breaker for equipment

Compliances

The product complies with following Guide Lines

Identification	Details	Initiator	Description
CE	CE declaration of conformity	SCHURTER AG	The CE marking declares that the product complies with the applicable requirements laid down in the harmonisation of Community legislation on its affixing in accordance with EU Regulation 765/2008.
UKCA	UKCA declaration of conformity	SCHURTER AG	The UKCA marking declares that the product complies with the applicable requirements laid down in the British Amendment of Regulation (EC) 765/2008.
RoHS	RoHS	SCHURTER AG	Directive RoHS 2011/65/EU, Amendment (EU) 2015/863
50	China RoHS	SCHURTER AG	The law SJ / T 11363-2006 (China RoHS) has been in force since 1 March 2007. It is similar to the EU directive RoHS.
REACH	REACH	SCHURTER AG	On 1 June 2007, Regulation (EC) No 1907/2006 on the Registration, Evaluation, Authorization and Restriction of Chemicals 1 (abbreviated as "REACH") entered into force.

Dimension [mm]

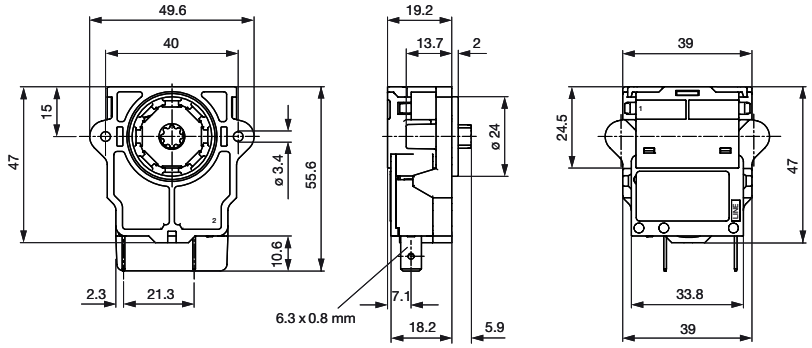

Screw type: 2x PT WN1413 KA 35x12

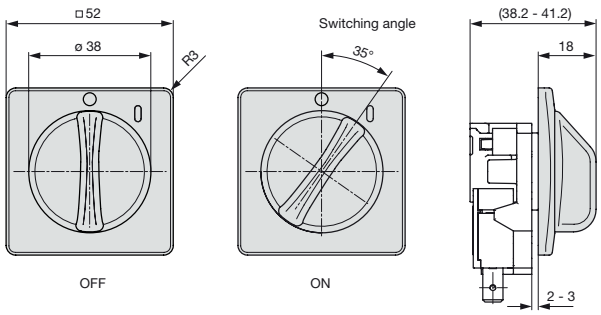

TA35 Rotary Switch 1Pol

Cut out

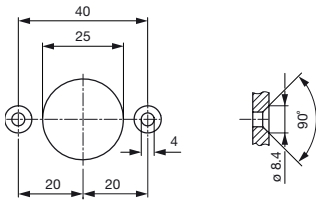

Assembly Instructions



Typical internal resistance per pole

Rated Current [A]	Internal Resistance [Ω]
0.05	200.000
0.1	70.000
0.5	2.750
1.0	0.720
1.5	0.340
2.0	0.187
2.5	0.115
2.8	0.089
3.0	0.059
4.0	0.059
5.0	0.044
6.0	0.028
7.0	0.0142
8.0	0.0142
10.0	0.0109
12.0	0.0086
13.0 *	0.0072
14.0 *	0.0072
15.0 *	0.0056
16.0 *	0.0056
18.0 *	0.0052
20.0 *	0.0052

* 3-Pole max. 12 A

Effect of ambient temperature

The units are calibrated for an ambient temperature of +23°C. To determine the rated current for a lower or higher ambient temperature, use a correction factor (typical value) from the table below:

Ambient Temperature [°C]	Correction factor
-30	0.77
-20	0.81
0	0.90
+23	1.00
+40	1.03
+50	1.04
+60	1.06

Example: Rated current = 5 A, Environmental temperature = 50 °C --> Correction factor = 1.04, Resulting current = 5.2 A --> Round to next higher rated current: 6 A

Time-Current-Curves

Tripping Characteristics I_n < 3 A

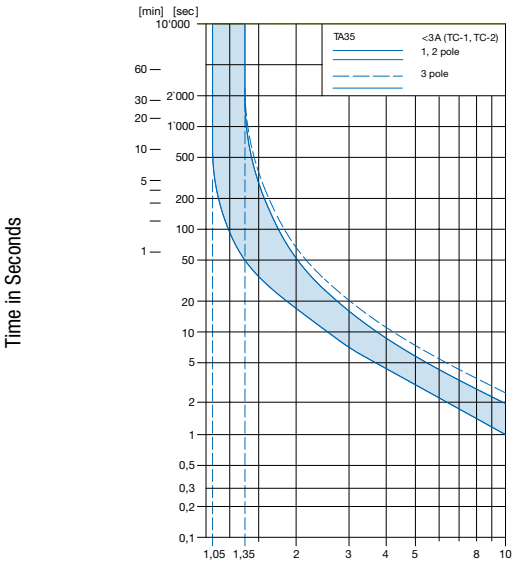

Ambient temperature +23°

Tripping Characteristics I_n 3 -20 A

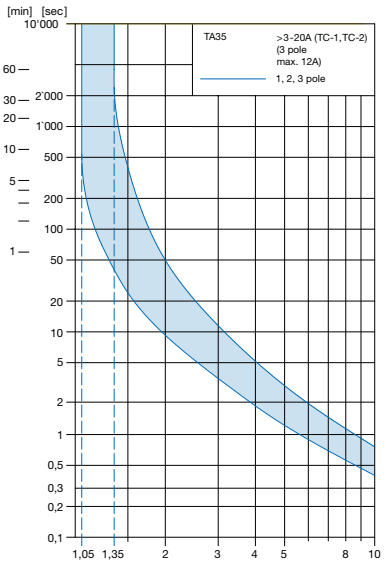

Ambient temperature +23°

TA35 Rotary Switch 1Pol

T	A	3	5	-	E	B	T	T	F	1	2	0	C	0	-	0	0	0
					1			2	3	4			5			6		

Basic function 1

Poles	1	2		3
Thermal overload protection / Illumination	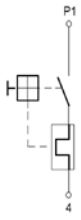	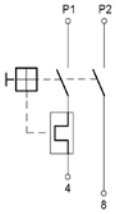	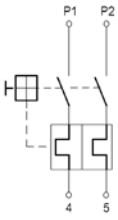	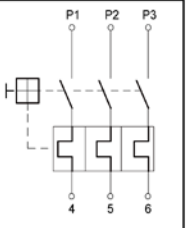
Rotary Knob				
Without illumination	EFT	EBT	EBD	EKD

Front- & Actuation color 2

Front Bezel	Rotary Knob		
black	black	=	T
without bezel	without knob	=	N

Front bezel legend, marking 3

Surface	Symbol		
relief recessed	I 0	=	F
no marking	no symbol	=	N

Rated current [A] 4

Thermal overload protection

In			In			In			In		
0.05 A	=	Z05	1.0 A	=	J10	4.0 A	=	040	14.0 A*	=	140
0.10 A	=	J01	1.2 A	=	J12	5.0 A	=	050	15.0 A*	=	150
0.20 A	=	J02	1.5 A	=	J15	6.0 A	=	060	16.0 A*	=	160
0.30 A	=	J03	2.0 A	=	J20	7.0 A	=	070	18.0 A*	=	180
0.40 A	=	J04	2.5 A	=	J25	8.0 A	=	080	20.0 A*	=	200
0.50 A	=	J05	3.0 A	=	030	10.0 A	=	100			
0.80 A	=	J08	3.5 A	=	035	12.0 A	=	120			

* 3-Pole max. 12 A

Features 5

Standard/ no features	=	C0

Special marking 6

Standard/ no special marking	=	000
Special marking (XXX = placehoder)	=	XXX

All Variants

Designation	Order Number
TA35 Rotary Switch 1 pole, 12 A, Snap-in version, Quick connect terminals 6.3 x 0.8 mm, 240 VAC, 1-pole, Circuit Breakers	4435.0237
TA35 Rotary Switch 1 pole, 10 A, Snap-in version, Quick connect terminals 6.3 x 0.8 mm, 240 VAC, 1-pole, Circuit Breakers	4435.0242

Availability for all products can be searched real-time:https://www.schurter.com/en/Stock-Check/Stock-Check-SCHURTER

The specifications, descriptions and illustrations indicated in this document are based on current information. All content is subject to modifications and amendments. Information furnished is believed to be accurate and reliable. However, users should independently evaluate the suitability and test each product selected for their own applications.