TM12-221

Circuit Breaker for Equipment thermal-magnetic, Threaded neck type, Manual ON/OFF, Quick connect terminals



See below:
Approvals and Compliances

Description

- Threaded neck type
- TMF12-211 - Thermal-magnetic circuit breaker
- 1-pole
- Manual ON/OFF type
- Insensitive to shock or vibration
- Quick connect terminals 6.3 x 0.8 mm

Unique Selling Proposition

- Tripping characteristic Fast or Slow
- Positively trip-free release
- Protection cover for IP54 available
- Different mounting possibilities

Applications

- Power supplies
- Uninterruptible power supply
- Power tools
- Household appliances

Weblinks

pdf data sheet, html datasheet, General Product Information, Distributor-Stock-Check, Detailed request for product, Product News

Technical Data

Rated Voltage AC	AC 240 VAC
Rated Voltage DC	28 VDC
Rated current range AC	0.05 - 15 A , see approbations
Conditional short circuit capacity Inc	IEC 60934: PC1, AC 240 V: 1 kA
Short circuit capacity Icn	IEC 60934: AC 240 V : 200 A
	AC/DC 28 V : 400 A
Degree of Protection	front side IP40 acc. to IEC 60529
Dielectric Strength	50 Hz: > 1.5 kV Impulse 1.2/50 µs: > 2.5 kV
Insulation Resistance	500 VDC > 100 MΩ
Endurance typical	2 x Ir: 5000 switching cycles
Endurance minimum	Manual ON/OFF type AC : 2 x Ir , cos φ 0.6 : DC : 2 x Ir , L/R = 2 - 3 ms : 5000 switching cycles

Overload	IEC: min. 40 trips @ 6 x Ir, cos φ 0.6
	UL / CSA: min. 50 trips @ 1.5 x Ir, cos φ 0.75
Allowable Operation Temp.	-5 °C to 60 °C
Vibration Resistance	± 1.5 mm @ 10 - 60 Hz acc. to IEC 60068-2-6, test Fc 10 G @ 60 - 500 Hz acc. to IEC 60068-2-6, test Fc
Shock Resistance	100 G / 6 ms acc. to IEC 60068-2-27, test Ea
Tripping Type	Thermal-Magnetic
Actuation Type	Manual ON/OFF
Weight	ca. 10 g

Approvals and Compliances

Detailed information on product approvals, code requirements, usage instructions and detailed test conditions can be looked up in Details about Approvals

SCHURTER products are designed for use in industrial environments. They have approvals from independent testing bodies according to national and international standards. Products with specific characteristics and requirements such as required in the automotive sector according to IATF 16949, medical technology according to ISO 13485 or in the aerospace industry can be offered exclusively with customer-specific, individual agreements by SCHURTER.

Approvals

The approval mark is used by the testing authorities to certify compliance with the safety requirements placed on electronic products.

Approval Reference Type: TM12

Approval Logo	Certificates	Certification Body	Description
	VDE Approvals	VDE	VDE Certificate Number: 99673
	UL Approvals	UL	UL File Number: E71572
	CSA Approvals	CSA	CSA Certification Record: LR 37712
	CCC Approvals	CCC	CCC Certificate Number: 2020970307003504

Product standards

Product standards that are referenced

Organization	Design	Standard	Description
	Designed according to	IEC 60934	Circuit-breakers for equipment (CBE)
	Designed according to	UL 1077	Standard for Supplementary Protectors for Use in Electrical Equipment
	Designed according to	GB 17701	Circuit-breaker for equipment

Application standards

Application standards where the product can be used

Organization	Design	Standard	Description
	Designed for applications acc.	IEC/UL 62368-1	Audio/video, information and communication technology equipment - Part 1: Safety requirements

Compliances

The product complies with following Guide Lines

Identification	Details	Initiator	Description
	CE declaration of conformity	SCHURTER AG	The CE marking declares that the product complies with the applicable requirements laid down in the harmonisation of Community legislation on its affixing in accordance with EU Regulation 765/2008.
	UKCA declaration of conformity	SCHURTER AG	The UKCA marking declares that the product complies with the applicable requirements laid down in the British Amendment of Regulation (EC) 765/2008.
	RoHS	SCHURTER AG	Directive RoHS 2011/65/EU, Amendment (EU) 2015/863
	China RoHS	SCHURTER AG	The law SJ / T 11363-2006 (China RoHS) has been in force since 1 March 2007. It is similar to the EU directive RoHS.
	REACH	SCHURTER AG	On 1 June 2007, Regulation (EC) No 1907/2006 on the Registration, Evaluation, Authorization and Restriction of Chemicals 1 (abbreviated as "REACH") entered into force.

Dimension [mm]

TMx12-211

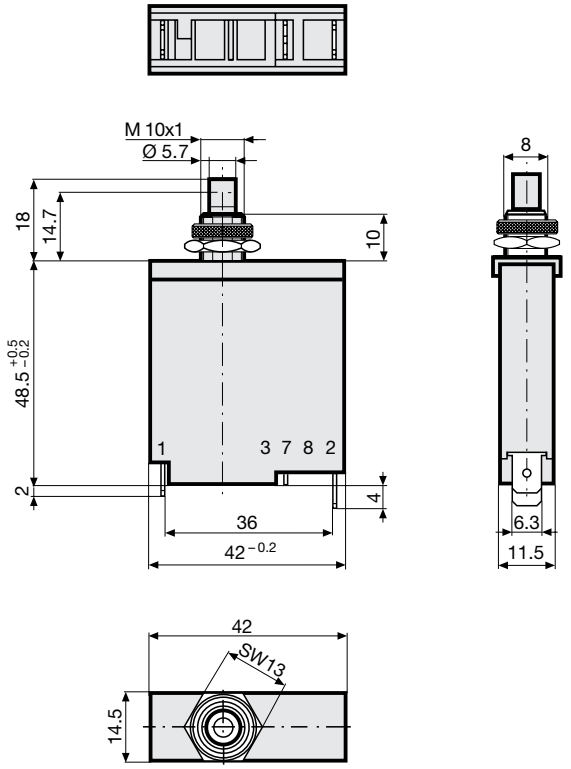

TMx12-211N

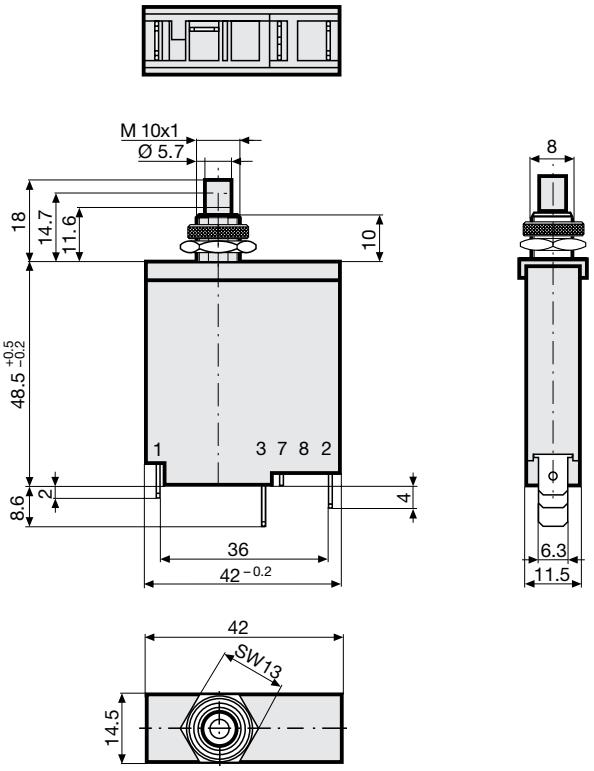

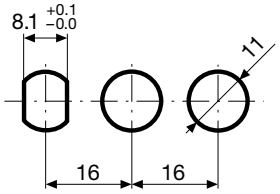

Diagrams

TM12-...

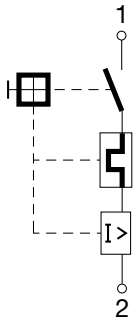

TM12-...N

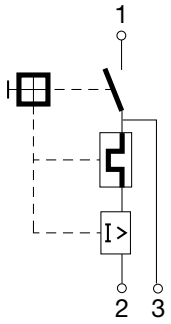

TM12-...S

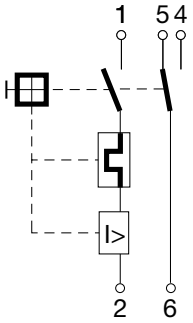

TM12-...SN

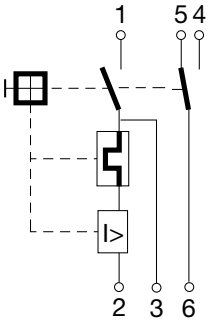

Approval		Main circuit			Auxiliary circuit		
		Rated current	Rated Voltage AC	Rated Voltage DC	Rated current	Rated Voltage AC	Rated Voltage DC
c UL us	UL 1077 CSA C22.2 No. 235	0.05...15 A	240 V	28 V	2 A 3 A	120 V -	- 28 V
	CSA C22.2 No. 235	0.05...16 A	240 V	28 V	1 A	240 V	-
	EN 60934	0.05...16 A	240 V	28 V	1 A	240 V	28 V
	GB 17701	0.05...16 A	240 V	28 V	1 A	240 V	28 V

Typical internal resistance TMF12

Rated Current [A]	Internal Resistance [Ω]
0.05	335.00
0.50	4.37
1.00	1.23
2.00	0.369
3.00	0.181
4.00	0.097
5.00	0.055
6.00	0.044
7.00	0.0231
8.00	0.0227
9.00	0.0142
10.00	0.0123
11.00	0.012
12.00	0.012
13.00	0.0108
14.00	0.0091
15.00	0.0089
16.00	0.0071

Typical internal resistance TMT12

Rated Current [A]	Internal Resistance [Ω]
0.05	260.00
0.50	4.03
1.00	1.006
2.00	0.323
3.00	0.161
4.00	0.086
5.00	0.0494
6.00	0.0396
7.00	0.0257
8.00	0.0249
9.00	0.0129
10.00	0.0112
11.00	0.0111
12.00	0.0111
13.00	0.0109
14.00	0.0092
15.00	0.0090
16.00	0.0075

Effect of ambient temperature

The units are calibrated for an ambient temperature of +23°C. To determine the rated current for a lower or higher ambient temperature, use a correction factor (typical value) from the table below:

Ambient Temperature [°C]	Correction factor
-5	0.87
0	0.90
10	0.95
23	1.00
30	1.05
40	1.12
50	1.20
60	1.30

Example: Rated current = 5 A, Environmental temperature = 50 °C, --> Correction factor = 1.2, Resulting current = 6.0 A

Time-Current-Curves

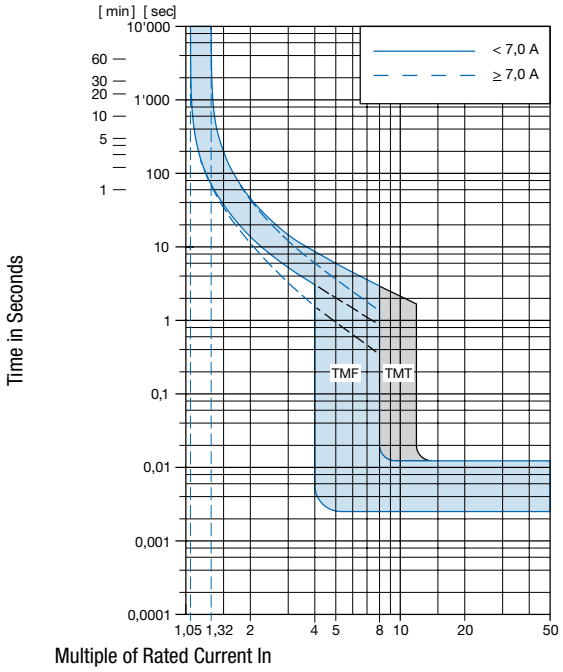

Multiple of Rated Current In

Reference Temperature +23°

Config. Code

TM F 12 - 1 2 3 A B C - 1.23

The characters are placeholders for the correspondingly keys of selections from the key tables.

TM **F** 12 - 1 2 3 A B C - 1.23 = Magnetic release range

Magnetic release range	Configuration key
Fast	F
Slow	T

TM F 12 - **1** 2 3 A B C - 1.23 = Mounting

Mounting	Configuration key
Threaded neck type with hexagonal- and knurled nut	2

TM F 12 - 1 **2** 3 A B C - 1.23 = Actuation Type

Actuation Type	Configuration key
Manual ON/OFF (push/push)	2

TM F 12 - 1 2 **3** A B C - 1.23 = Terminal

Terminal	Configuration key
Quick connect terminal 6.3x0.8mm	1

TM F 12 - 1 2 3 **A** B C - 1.23 = Auxiliary contact

Auxiliary contact	Configuration key
Auxiliary contact	S

TM F 12 - 1 2 3 A **B** C - 1.23 = Shunt terminal

Shunt terminal	Configuration key
Shunt terminal	N

TM F 12 - 1 2 3 A B **C** - 1.23 = Setting indication

Setting indication	Configuration key
Setting indication	R

TM F 12 - 1 2 3 A B C - **1.23** = Rated current

Rated current	Configuration key
0.05 A	0.05
0.1 A	0.1
0.15 A	0.15
0.2 A	0.2
0.3 A	0.3
0.4 A	0.4
0.5 A	0.5
0.6 A	0.6
0.7 A	0.7
0.8 A	0.8
0.9 A	0.9
1.0	1
1.1 A	1.1
1.2 A	1.2
1.3 A	1.3

Other rated currents on request

Rated current	Configuration key
1.4 A	1.4
1.5 A	1.5
1.6 A	1.6
1.7 A	1.7
1.8 A	1.8
1.9 A	1.9
2.0 A	2
2.1 A	2.1
2.3 A	2.3
2.5 A	2.5
2.8 A	2.8
3.0 A	3
3.3 A	3.3
3.5 A	3.5
4.0 A	4
4.5 A	4.5

Other rated currents on request

Rated current	Configuration key
5.0 A	5
5.5 A	5.5
6.0	6
6.5 A	6.5
7.0 A	7
7.5 A	7.5
8.0 A	8
8.5 A	8.5
9.0 A	9
9.5 A	9.5
10.0 A	10
11.0 A	11
12.0 A	12
13.0 A	13
14.0 A	14
15.0 A	15
16.0 A	16

Other rated currents on request

Variants

Rated Current [A]	Construction variants			Config. Code	Order Number
	Auxiliary contact	Shunt terminal	Setting indication		
0.3				TMF12-221-0.3	4410.0437
1.2				TMT12-221-1.2	4410.0003
1.2				TMF12-221-1.2	4410.0157
2				TMF12-221-2	4410.0166
2.5	●			TMT12-221S-2.5	4410.0087
3.5	●			TMF12-221S-3.5	4410.0397
4			●	TMF12-221R-4	4410.0625
10				TMT12-221-10	4410.0024
16				TMT12-221-16	4410.0142

Availability for all products can be searched real-time:https://www.schurter.com/en/Stock-Check/Stock-Check-SCHURTER

Packaging Unit

20 Pcs

Accessories

	Description
	T-Line Accessories Accessories to T-Line

04.01.2022

The specifications, descriptions and illustrations indicated in this document are based on current information. All content is subject to modifications and amendments. Information furnished is believed to be accurate and reliable. However, users should independently evaluate the suitability and test each product selected for their own applications.